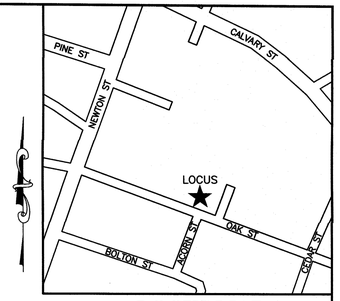

LOCUS MAP
(NOT TO SCALE)

LEGEND

	EXISTING BUILDING
—o—	FENCE
×	SPOT GRADE

NOTES:

1. INFORMATION SHOWN ON THIS PLAN IS THE RESULT OF A FIELD SURVEY PERFORMED BY PETER NOLAN & ASSOCIATES LLC AS OF 6/15/2018.

2. DEED REFERENCE: BOOK 35125, PAGE 155
PLAN REFERENCE 1: END OF BOOK 4910
PLAN REFERENCE 2: PLAN No. 685 OF 1995
PLAN REFERENCE 3: LAND COURT PLAN 10988B
MIDDLESEX COUNTY SOUTH DISTRICT REGISTRY OF DEEDS.

3. THIS PLAN IS NOT INTENDED TO BE RECORDED.

4. I CERTIFY THAT THE DWELLING SHOWN IS NOT LOCATED WITHIN A SPECIAL FLOOD HAZARD ZONE. IT IS LOCATED IN ZONE X, ON FLOOD HAZARD BOUNDARY MAP NUMBER 25017C0551E, PANEL NUMBER 0551E, COMMUNITY NUMBER: 250222, DATED 6/4/2010.

5. THIS PLAN DOES NOT SHOW ANY UNRECORDED OR UNWRITTEN EASEMENTS WHICH MAY EXIST. A REASONABLE AND DILIGENT ATTEMPT HAS BEEN MADE TO OBSERVE ANY APPARENT USES OF THE LAND; HOWEVER THIS NOT CONSTITUTE A GUARANTEE THAT NO SUCH EASEMENTS EXIST.

6. FIRST FLOOR ELEVATIONS ARE TAKEN AT THRESHOLD.

7. NO RESPONSIBILITY IS TAKEN FOR ZONING TABLE AS PETER NOLAN & ASSOCIATES LLC ARE NOT ZONING EXPERTS. TABLE IS TAKEN FROM TABLE PROVIDED BY LOCAL ZONING ORDINANCE. CLIENT AND/OR ARCHITECT TO VERIFY THE ACCURACY OF ZONING ANALYSIS.

8. THE ELEVATIONS SHOWN ARE ON AN ASSUMED DATUM.

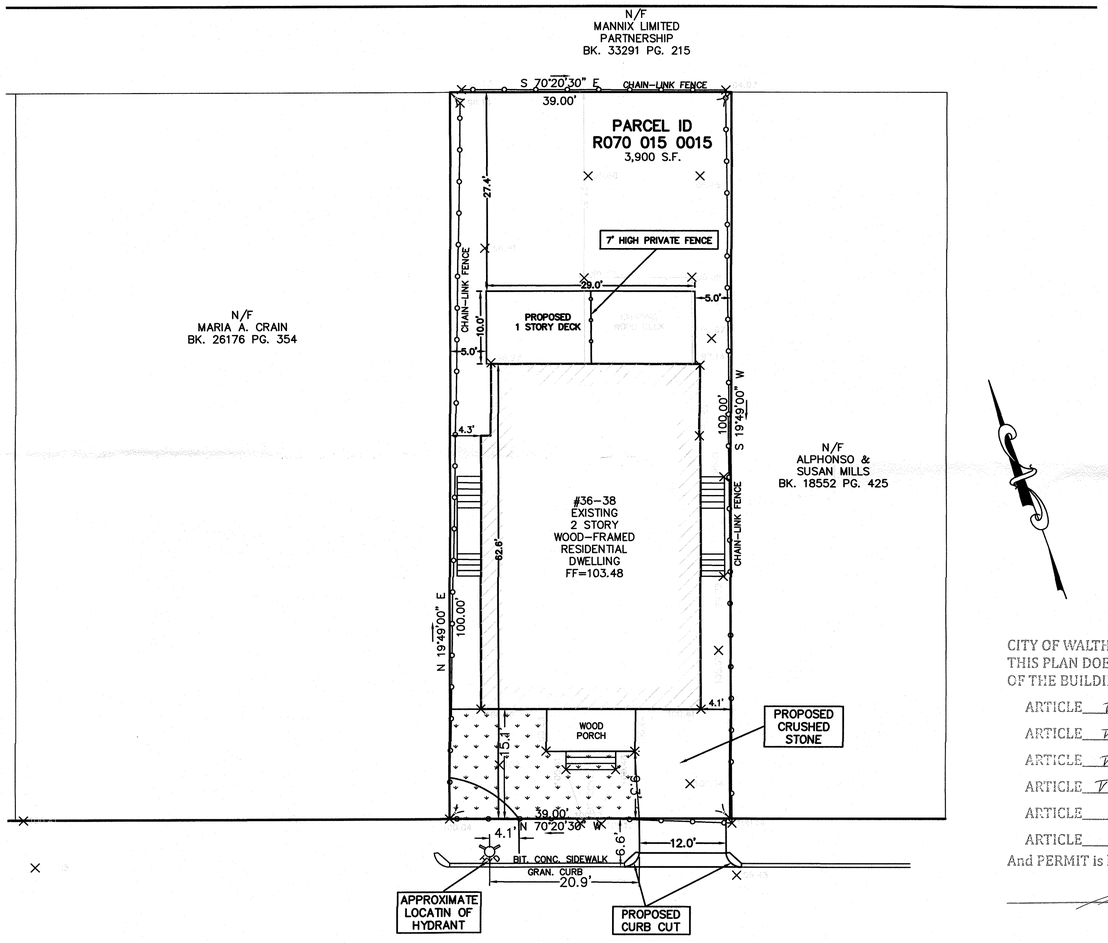

OAK STREET
(PUBLIC WAY – 33' WIDE)

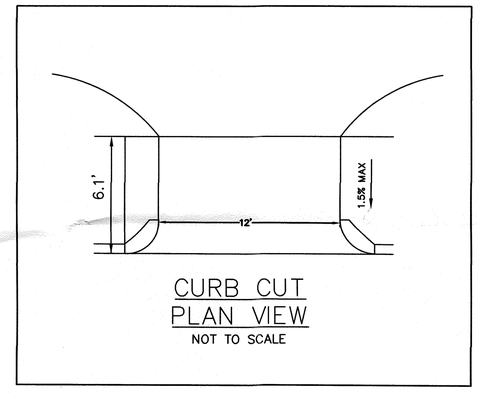

CURB CUT
PLAN VIEW
NOT TO SCALE

CITY OF WALTHAM DATE 8/6/2020
THIS PLAN DOES NOT CONFORM WITH THE REQUIREMENTS OF THE BUILDING ZONING ORDINANCES, as follows.

ARTICLE V SECTION 5.3 Sub Sec. 5.31
ARTICLE V SECTION 5.3 Sub Sec. 5.32
ARTICLE V SECTION 5.3 Sub Sec. 5.34
ARTICLE V SECTION 5.3 Sub Sec. 5.35
ARTICLE SECTION Sub Sec.
ARTICLE SECTION Sub Sec.

And PERMIT is hereby Refused.

INSPECTOR of BUILDINGS

GRAPHIC SCALE

10 0 5 10 20 40

(IN FEET)
1 inch = 10 ft.

SCALE 1"=10'				
DATE 6/5/2020	REV	DATE	REVISION	BY
SHEET 1	36–38 OAK STREET WALTHAM MASSACHUSETTS			
PLAN NO. 1 OF 1				
CLIENT:	PROPOSED PLAN			
DRAWN BY HM				
CHKD BY ES				
APPD BY PJN				

PETER NOLAN & ASSOCIATES LLC
LAND SURVEYORS/CIVIL ENGINEERING CONSULTANTS
697 CAMBRIDGE STREET, SUITE 103 BRIGHTON MA 02135
PHONE: 857 891 7478/617 782 1533 FAX: 617 202 5691
EMAIL: pnolan@pnasurveyors.com

COMMONWEALTH OF MASSACHUSETTS
EDMOND T. SPRUHAN
CIVIL
No. 53316
REGISTERED PROFESSIONAL ENGINEER

SHEET NO.
1