The City of Waltham

Invites
Interested Parties
To propose the best offer and or bid
For the service or product herewith described:

ELSIE TURNER FIELD
AND
GRAVERSON PLAYGROUND
IMPROVEMENTS

The GENERAL BID is due: Thursday December 7, 2017 at 10:00 am

PRE BID Meeting and Briefing on Site: Thursday November 28, 2017 at 10:00 am
Meet at 16 Pinevale Rd., Waltham

LAST DAY FOR WRITTEN QUESTIONS: 12 Noon Thursday November 30, 2017
(To Jpedulla@city.waltham.ma.us)

Table of Contents

Cover
Table of Contents

DIVISION 00
00020 Notice to Bidders
00100 Instructions to Bidders
00310 Form for General Bid
00500 Agreement
00501 Performance Bond
00502 Payment Bond
00503 General Conditions
00504 Compliance Forms (Submission is Required with Bid Response)

Elsie Turner Technical Specifications and Drawings

Graverson Park Technical Specifications and Drawings

SECTION 00020
CITY OF WALTHAM
MASSACHUSETTS

NOTICE TO BIDDERS

Elsie Turner Field & Graverson Playground Improvements
421 Trapelo Rd. and 16 Pinevale Rd.
WALTHAM, MASSACHUSETTS

The City of Waltham, Massachusetts invites sealed bids from Contractors for the **Elsie Turner Field & Graverson Playground Improvements,** Waltham, Massachusetts. The work at Elsie Turner Field & Graverson Playground includes park-wide including installation of playground equipment, water spray Equipment, athletic fields and courts, parking lot construction, lighting, grading, drainage systems, paving, curbing, fencing, site furniture and landscaping.

PLANS, SPECIFICATIONS and other Contract Documents may be obtained by visiting the City's Web Site at www.city.waltham.ma.us/open-bids

Copies of Addenda will be e- mailed to the registered Bidders without charge. Addenda will also be posted on the web site above

Sealed **BIDS** for this project will be accepted from eligible bidders at the Purchasing Department, Waltham City Hall, 610 Main Street, Waltham, MA 02452 until **10:00 AM on December 7, 2017,** at which place and time they shall be publicly opened, read aloud and recorded for presentation to the Awarding Authority.

A **PRE-BID CONFERENCE AND SITE INSPECTION** will be held for all interested parties at **10:00 AM on November 28, 2017** at the site of the **Graverson Playground 16 Pinevale Rd., Waltham.** Attendance at this pre-bid conference is strongly recommended but not mandatory for parties submitting a bid. It will be the only opportunity to visit the site prior to the bid opening.

LAST DAY FOR WRITTEN QUESTIONS is at 12 noon November 30, 2017. Questions are to be sent via e-mail only to Jpedulla@city.waltham.ma.us

Each general bid shall be accompanied by a bid deposit in the form of a bid bond, certified check, or a treasurer's or cashier's check issued by a responsible bank or trust company, payable to the City of Waltham in the amount of five percent (5%) of the value of the bid

Bids shall be made on the basis of the Minimum Wage Rates as determined by the Commissioner of Labor and Industries, Pursuant to the Provisions of Chapter 149, Sections 26 to 27D inclusive of Massachusetts General Laws, a copy of which is found in the City's Web site at www.city.waltham.ma.us/open-bids .

Bidders' selection procedures and contract award shall be in conformity with the rules of Commonwealth of Massachusetts statute Chapter 30, §39M.

Performance and Labor and Materials payment bonds each in the full amount of the contract price will be required from the successful bidder.

The Awarding Authority reserves the right to reject any or all general bids, if it be in the public interest to do so, and to reject any sub-bid on any sub-trade if it determines that such sub-bid does not represent the sub-bid of a person competent to perform the work as specified or that less than three such sub-bids were received and that the prices are not reasonable for acceptance without further competition.

The successful bidder will be required to furnish a Certificate of Insurance, naming the City of Waltham as an Additional Named Insured with a waiver of subrogation, for General Liability and Vehicle Liability in the amount of $1,000,000 per occurrence and $1,000,000 in the aggregate and Worker's Compensation Insurance as prescribed by law.

In accordance with the laws of the Commonwealth of Massachusetts the undersigned certifies that all employees to be employed at the worksite will have successfully completed a course in construction safety and health approved by OSHA that is at least 10 hours in duration at the time the employee begins work and shall furnish documentation of successful completion of said course with the first certified payroll report for each employee.

CITY ORDINANCE. APPROVAL OF CONTRACTS BY MAYOR, SEC. 3-12 OF THE CITY ORDINANCES.
All contract made by any department, board or commission where the amount involved is two thousand dollars ($2,000) or more shall be in writing, and no such contract shall be deemed to have been made or executed until the approval of the Mayor is affixed thereto. Any construction contract shall, and all other contracts may, where the contract exceed five thousand dollars ($5,000) be required to be accompanied by a bond with sureties satisfactory to the Mayor.

CITY OF WALTHAM

Joseph Pedulla, CPO
Purchasing Department
City Hall, 610 Main Street
Waltham, MA 02452

SECTION 00100 - INSTRUCTION TO BIDDERS

PART 1 - GENERAL

1.01 SCHEDULE OF DATES

A. Advertisement appears in Central Register, Plans and Specifications ready for Bidders at the Offices of the Waltham Purchasing Agent after 8:30 P.M. on November 8, 2017.

B. **Pre-bid walkthrough and site inspection**: **November 28, 2017, at 10:00 AM.** Meet at **Graverson Playground, 16 Pinevale Rd., Waltham.**

C. **Questions** and requests for interpretations may be submitted in writing via e-mail ONLY to Jpedulla@city.waltham.ma.us up to **12:00 noon November 30, 2017.**

D. Addenda will be issued with interpretations as determined by the Purchasing Department only via e-mail and posting on the web site.

E. **General Bids Deadline**: **10:00 A.M. on December 7, 2017,** in the Purchasing Department, City Hall, 610 Main Street, Waltham, MA 02452, Attn: J. Pedulla, CPO, where the bids will be publicly open and read.

1.02 BIDDING PROCEDURE

A. Bids for the work are subject to the provisions of General Laws, Chapter 30, § 39M, as amended. Regulations governing the bidding procedures as set forth in the above mentioned amended General Laws must be followed.

B. In the event of any inconsistencies between any of the provisions of these Contract Documents and of the cited statute, anything herein to the contrary notwithstanding, the provisions of the said statute shall control.

C. No General Bid received by the Awarding Authority after the time respectively established herein for the opening of General Bids will be considered, regardless of the cause for the delay in the receipt of any such bid.

1.03 WITHDRAWAL OF BIDS

A. Bids may be withdrawn prior to the time respectively established for the opening of General Bids only on written request to the Awarding Authority.

1.04 INTERPRETATION OF CONTRACT DOCUMENTS

A. No oral interpretation will be made to any bidder. All questions or requests for interpretations must be made in writing to the Architect.

B. Every interpretation made to a bidder will be in the form of an Addendum to the drawings and/or specifications, which will be made available to all persons to whom Contract Documents have been issued.

C. Failure of the Awarding Authority to send, or of any bidder to receive any such Addendum shall not relieve any bidder form obligation under his bid as submitted.

D. All such Addenda shall become a part of the Contract Documents.

1.05 EXAMINATION OF SITE AND CONTRACT DOCUMENTS

A. Each bidder may visit the site of the proposed work and fully acquaint himself with conditions as they exist, and may also thoroughly examine the Contract Documents. Failure of any bidder to visit the site and acquaint himself with the Contract Documents shall not relieve any bidder from any obligation with respect to his bid.

B. By submitting a bid, the bidder agrees that the Contract Documents are adequate and that the required result for a full and complete installation can be produced. The successful bidder shall furnish any and all labor, materials, insurance, permits and all other items needed to produce the required result to the satisfaction of the Awarding Authority.

1.06 BID SECURITY

A. The General Contractor's bid must be accompanied by bid security in the amount of five percent (5%) of the bid.

B. At the option of the bidder, the security may be bid bond, certified, treasurer's or cashier's check issued by a responsible bank or trust company. No other type of bid security is acceptable.

Bid Bonds shall be issued by a Surety Company qualified to do business under the laws of the Commonwealth of Massachusetts.

C. Certified, Treasurer's or Cashier's check shall be made payable to the City of Waltham, Massachusetts.

D. The bid security shall secure the execution of the Contract and the furnishing of a Performance and Payment Bond by the successful General Bidder for 100% of the contract value.

E. Should any General Bidder to whom an award is made fail to enter into a contract therefore within five (5) days, Saturdays, Sundays and Legal Holidays, excluded, after notice of award has been mailed to him or fail within such time to furnish a Performance Bond and also a Labor and Materials or Payment Bond as required, the amount so received from such General Bidder through his Bid Bond, Certified, Treasurer's or Cashier's check as bid deposit shall become the property of the City of Waltham, Massachusetts as liquidated damages; provided that the amount of the bid

deposit, which becomes the property of the City of Waltham, Massachusetts, shall not in any event exceed the difference between his bid price and the bid price of the next lowest responsible and eligible bidder; and provided further that, in case of death, disability, bona fide clerical error or mechanical error of a substantial nature, or other unforeseen circumstances affecting the General Bidder, his deposit shall be returned to him.

1.07 BID FORM

A. General Bids shall be submitted on the "FORM FOR GENERAL BID" enclosed. Erasures or other changes must be explained or noted over the signature of the bidder.

B. Bid forms must be completely filled in. Bids which are incomplete, conditional, or obscure, or which contain additions not called for will be rejected.

C. General Bidders shall submit one set of executed bid forms to the Awarding Authority.

1.08 SUBMISSION OF BIDS AND BID SECURITIES

A. Each bid submitted by a General Contractor shall be enclosed in a sealed envelope that shall be placed with the bid security in an outer envelope. The outer envelope shall be sealed and clearly marked as follows:

(Firm Name): _____
General Bid and Bid Security for:
Elsie Turner and Graverson Parks Improvements

1.09 AWARD OF CONTRACT

A. The Contract shall be awarded to the lowest responsible and eligible General Bidder on the basis of competitive bids in accordance with the procedure set forth in the provision of Chapter 30, §39M of the General Laws of the Commonwealth of Massachusetts.

B. If the bidder selected as the General Contractor fails to perform his agreement to execute a contract in accordance with the terms of his General Bid, and furnish a Performance Bond and also a Labor and Materials or Payment Bond, as stated in his General Bid an award shall be made to the next lowest responsible and eligible bidder.

C. The words "lowest responsible and eligible bidder" shall be the bidder whose name is the lowest of those bidders possessing the skill, ability and integrity necessary for the faithful performance of the work and who shall certify that he is able to furnish labor that can work in harmony with all other elements of labor employed, or to be employed, on the work. Essential information in regard to such qualifications shall be submitted in such form as the Awarding Authority may require.

D. Action on the award will be taken within sixty (60) days, Saturdays, Sundays and Legal Holidays excluded after the opening of the bids.

1.10 SECURITY FOR FAITHFUL PERFORMANCE

A. The successful bidder must deliver to the Awarding Authority simultaneously with his delivery of the executed contract, an executed Performance Bond, and also a Labor and materials or Payment Bond, each issued by a surety company qualified to do business under the laws of the Commonwealth and satisfactory to the Awarding Authority and each in the sum of One Hundred Percent (100%) of the Contract Price, as surety for the faithful performance of his contract, and for the payment of all persons performing labor or furnishing materials in connection therewith. Said bonds shall provide that, if the General Contractor fails or refuses to complete the Contract, the Surety Company will be obligated to do so.

B. Premiums are to be paid by the General Contractor, and are to be included in the Contract Price.

1.11 EQUAL OPPORTUNITY

A. The City of Waltham is an Equal Opportunity employer and will require compliance with the minority business enterprise plan (MBE) on file in the Purchasing Department

1.12 PRE-BID WALK-THRU

A. A pre-bid conference will be held at the site on **November 28, 2017, at 10:00 AM** at the **Graverson Playground, 16 Pinevale Rd., Waltham, MA**. Interested parties are encouraged to attend given that this will be the only time the site is available prior to the submission of bids. Further, prior to the bid opening, potential bidders may not go onto the site any time other than the aforementioned pre-bid conference.

1.13 SITE VISITS

A. Prospective bidders are prohibited from going onto the site prior to the Bid Opening or any time other than the pre-bid walk-thru, as set forth in Section 1.12 above, unless authorized by the Architect in an Addendum to the bid documents.

1.14 CONTRACT DOCUMENTS

A. The Awarding Authority shall make available the bid documents and addenda in the City Web site at www.city.waltham.ma.us/open-bids. No plans will be mailed.

1.15 EQUALITY

A. Except where otherwise specifically provided to the contrary, the words “or approved equal” are hereby inserted immediately following the name or description of each article, assembly, system, or any component part thereof in the Contract Documents. It is the Contractor’s responsibility to provide all the research and documentation that would prove a product or assembly is “equal”. Failure to provide research or documentation does not alleviate the Contractor’s responsibility to meet the schedule.

1.16 TAX FREE NUMBER

A. The City of Waltham has a tax-free number.

1.17 SCHEDULE

A. The work of the Contract shall be Substantially Complete in **240 calendar days** after the date of the Notice-to-Proceed and **not including winter shut-down**.

1.18 INTENTIONALLY LEFT BLANK

1.19 WEEKLY JOB MEETINGS

A. There will be a weekly job meeting at the site on the same agreed-upon day and time. Time will be provided to discuss and view the progress of the work and to answer questions. The Contractor's job Superintendent and Project Manager shall attend each meeting. The City reserves the right to have job meetings conducted in the location of its choosing.

1.20 PROJECT SUPERINTENDENT

A. The Contractor shall provide the same person as Superintendent for the entire duration of the project. Failure to maintain the same person in this position shall result in a One Thousand Dollar ($1,000.00) penalty per incident which shall cover the Architect's time to re-orient new personnel.

1.21 AWARD

A. The Awarding Authority reserves the right to reject any or all bids if it be in the public interest to do so, and to act upon the bids and make its award in any lawful manner.

1.22 PREVAILING WAGE SCHEDULE

A. Bids shall be made on the basis of the Prevailing Wage Schedule, as determined by the Commissioner of Labor and Industries, pursuant to the provision of the Massachusetts General Laws. The Prevailing wage Schedule for this project can be found in the City's web Site at www.city.waltham.ma.us/open-bids

1.23 CONFLICT OF INTEREST

A. A bidder filing a proposal thereby certifies that the proposal is made in good faith, without fraud, collusion, or connection of any kind with any other bidder for the same work, and that the bidder is competing solely on its own behalf without connection with, or obligation to, any undisclosed person or firm.

1.24 PROCEED ORDERS

A. No bidder is to proceed without a proceed order as set out in the contract.

1.25 INTENTIONALLY LEFT BLANK

1.26 COMPLIANCE WITH MASSACHUSETTS GENERAL LAWS

A. Pursuant to Massachusetts General Laws, Chapter 62C, Section 49A, I certify under the penalty of perjury that I, to the best of my knowledge and belief have filed all state tax returns and paid all the state taxes required under law.

1.27 CONSTRUCTION BARRICADES

A. The General Contractor shall provide all barricades to enclose the work area to prevent unauthorized access to the site.

1. The barricades shall provide enough room for all construction activities to be performed while separated from pedestrians, students, and staff on site.

2. Safety is the sole responsibility of the Contractor and any barricades necessary to protect the work and the public shall be provided.

3. Provide entrance protection.

1.28 INSURANCE

A. The contractor shall purchase and maintain, at his expense all insurance required by the Contract. Documents and all insurance required by the applicable laws of Massachusetts, including but not limited to, General Laws, Chapter 146, in connection with all hoisting equipment.

B. The Contractor shall purchase and maintain such insurance as will protect him from claims under workmen's compensation acts and from claims for damages because of bodily injury, including death and all property damage including, without limitation, damage to buildings and adjoining the site of construction which might arise from and during operations under this contract, whether such operations be by himself or by any subcontractor or anyone directly or indirectly employed by either of them including:

1. Statutory Worker's Compensation and Employer's Liability

The contractor shall provide insurance for the payment of compensation and the furnishing of other benefits under Chapter 152 of the General Laws (so-called Worker's Compensation Act) to all persons to be employed under this contract and shall continue in force such insurance as aforesaid shall be deemed a material breach of this Contract and shall operate as an immediate termination thereof. The contractor shall, without limiting the generality of the foregoing, conform to the provisions of Section 34A of Chapter 149 of the

General Laws, which Section is incorporated herein by reference and made a part of hereof.

2. Comprehensive General Liability Insurance

Minimum bodily injury limits of $ 1,000,000 per person and $ 1,000,000 per accident, and property damage limits of $ 500,000 per accident and $ 1,000,000 aggregate during any 12 month period, shall include the following:

a. Public liability (bodily injury and property damage)
b. X.C.U. (explosion, collapse, and underground utilities)
c. Independent contractor's protective liability.
d. Products and completed operations.
e. Save harmless agreement for Owner and Architects set forth in ARTICLE 10.11 of the GENERAL CONDITIONS.

3. Comprehensive All Risk Motor Vehicle Liability Insurance

Minimum bodily injury limits of $ 500,000 per person, $ 1,000,000 per accident, and property damage limit of $ 1,000,000 per accident.

4. All Risk Insurance

Covering all Contractors' equipment with a provision for Waiver of Subrogation against the Owner.

5. Excess Liability Insurance in Umbrella Form with combined Bodily Injury and Property Damage Limit of $ 1,000,000.

6. **City of Waltham shall be a Named Additional Insured with a Waiver of Subrogation on the insurance policy for this project.**

1.29 SITE ACCESS

A. The General Contractor shall gain access to the site via routes approved by the Owner.

1. The General Contractor as part of the bid price will restore all roads, curbs, driveways, walks and grassed or landscaped areas damaged during construction.

1.30 CONSTRUCTION TRAILER

A. The General Contractor shall locate the construction trailer at locations approved by the Owner.

B. The General Contractor shall locate all on site stored or staged materials within the enclosed area designated by the Owner.

1.31 INTENTIONALLY LEFT BLANK

1.32 COMPLETE BID FORMS

A. Please Note: Each bidder must fill in all the blanks on all the bid forms, even if the information is "zero dollars" or "not applicable". Also, please acknowledge all Addenda issued by the Awarding Authority.

2.00 FUNDS APPROPRIATION and LOAN AUTHORIZATION**.**

A THE CONTRACT OBLIGATION ON BEHALF OF THE CITY IS SUBJECT TO PRIOR APPROPRIATION OF MONIES FROM THE GOVERNMENTAL BODY AND AUTHORIZATION BY THE MAYOR.

3.0 CITY ORDINANCE. APPROVAL OF CONTRACTS BY MAYOR, SEC. 3-12 OF THE CITY ORDINANCES.

A All contract made by any department, board or commission where the amount involved is two thousand dollars ($2,000) or more shall be in writing, and no such contract shall be deemed to have been made or executed until the approval of the Mayor is affixed thereto. Any construction contract shall, and all other contracts may, where the contract exceed five thousand dollars ($5,000) be required to be accompanied by a bond with sureties satisfactory to the Mayor

Signature of Individual or Corporate Name

By:

_____

(Signature of Corporate Officer if applicable)

Title:_____

Social Security Number or Federal Identification Number: _____

END OF SECTION

SECTION 00310 FORM FOR GENERAL BID

ELSIE TURNER FIELD & GRAVERSON PLAYGROUND IMPROVEMENTS
WALTHAM, MASSACHUSETTS

General Bid Opening Date: 10:00 AM, December 7, 2017

Joseph Pedulla, CPO
City of Waltham
610 Main Street
Waltham, MA 02452

A. Basic Price

The undersigned:

_____
(Please type or print the business name of the bidding firm)

having visited the site of the above project and having familiarized myself with the local conditions affecting the cost of the work and with the contract documents, including Amendments and Addenda No's. ____,____,____,____,_____ hereby proposes to furnish all labor (including Sub Bids), materials, tools, equipment, insurance, permits and taxes, and to do and lawfully perform all things as provided in the specifications, all in accordance with the contract documents, for the sum of:

ELSIE TURNER FIELD

TOTAL Base Bid (in words)_____Dollars, $_____

Police Allowance	**$ 9,000**
Unforeseen Conditions	**$90,000**
TOTAL Elsie Turner (1)	**$**

GRAVERSON PLAYGROUND

TOTAL Base Bid (in words)_____Dollars, $_____

Police Allowance	**$15,000**
Unforeseen Conditions	**$60,000**
TOTAL Graverson Playground (2)	**$**

GRAND TOTAL (Combined, Both Sites, 1+2)
(in words)_____Dollars, $_____

B. Left Blank Intentionally

C. The undersigned agrees that, if s/he is selected as General Contractor, s/he will within five days, Saturdays, Sundays and legal holidays excluded, after presentation thereof by the Awarding Authority, execute a contract in accordance with the terms of this bid and furnish a performance bond and also a labor and materials or payment bond, each issued by a surety company qualified to do business under the laws of the Commonwealth and satisfactory to the Awarding Authority and each in the sum of the contract price, the premiums for which are to be paid by the General Contractor and are included in the contract price.

D. The undersigned certifies that s/he is able to furnish labor that can work in harmony with all other elements of labor employed or to be employed in the work and that s/he will comply fully with all laws and regulations applicable to awards made subject to section forty-four A.

E. The undersigned as Bidder certifies that if this proposal is accepted, s/he will furnish to the City of Waltham with the invoice for the material or equipment supplied two copies of any and all Material Safety Data Sheets applicable to such material or equipment, as required by M.G.L. Chapter 111F, so called "Right to Know Law".

F. The undersigned certifies under penalties of perjury that this bid is in all respects bona fide, fair and made without collusion or fraud with any other person. The word "person" shall mean any natural person, joint venture, partnership, corporation, or other business or legal entity.

G. Substantial Completion

1. The work of the Contract shall be Substantially Completed in two hundred and forty **(240) calendar days not including winter or weather shut-downs**.

H. In accordance with M.G.L., the undersigned certifies that all employees to be employed at the worksite will have successfully completed a course in construction safety and health approved by OSHA that is at least 10 hours in duration at the time the employee begins work and shall furnish documentation of successful completion of said course with the first certified payroll report for each employee.

Sincerely,

_____
(Bidder)

_____
(Address of Bidder)

By: _____
(Title - Owner*, Partner*)

(Seal, if Corporation)

By: _____
(If Corporation - Name and Office)

* If the business owned by the individual or partnership is conducted under a trade or assumed name, a certified copy of doing business under an assumed name should be annexed.

SECTION 00500

AGREEMENT

CITY OF WALTHAM

ARTICLE 1. This agreement, made this _____ day of _____, 2017 by and between the CITY OF WALTHAM, party of the first part, hereinafter called the CITY, by its MAYOR, and

_____

_____

hereinafter called the CONTRACTOR.

ARTICLE 2. Witnesseth, that the parties to this agreement, each in consideration of the agreement on the part of the others herein contained, do hereby agree, the CITY OF WALTHAM for itself, and said contractor for his heirs, executors, administrators and assigns as follows:

To furnish all equipment, machinery, tools and labor, to furnish and deliver all materials required to be furnished (except as otherwise specified) and deliver in and about the project and to do and perform all work in strict conformity with the provisions of this Contract and of the Notice to Bidders, bid, Project Manual, and Drawings hereto annexed. The said Notice to Bidders, bid, Project Manual, and Drawings are hereby made a part of this contract as fully and to the same effect as if the same had been set forth at length and incorporated in the contracts.

ARTICLE 3. In consideration of the foregoing premises the CITY agrees to pay and the CONTRACTOR agrees to receive as full compensation for everything furnished and done by the CONTRACTOR under this contract, including all work required by not included in the items herein mentioned, and also for all loss or damage arising out of the nature of the work aforesaid, or from the action of the elements, or from any unforeseen obstruction or difficulty encountered in the prosecution of the work, and for all expenses incurred by or in consequence of the suspension or discontinuance of the work specified, and for well and faithfully completing the work, and the whole thereof, as herein provided, such prices as are set forth in the accompanying bid.

This Agreement entered into as of the day and year first written above.

CITY OF WALTHAM, MASSACHUSETTS

FOR THE CITY

_____
Jeannette A. McCarthy, MAYOR,
City of Waltham
Date: _____

_____
Luke Stanton, Asst. City Solicitor
Date: _____
APPROVED AS TO FORM ONLY

_____
Nick Abruzzi, Recreation Director
Date: _____

_____
Joseph Pedulla, Purchasing Agent
Date: _____

_____
Paul Centofanti, Auditor
Date: _____

I CERTIFY THAT SUFFICIENT FUNDS
ARE AVAILABLE FOR THIS CONTRACT

FOR THE COMPANY

_____
CONTRACTOR (Signature),
Date: _____

_____
Company

_____
Address

SECTION 00501

PERFORMANCE BOND

CITY OF WALTHAM

KNOW ALL MEN BY THESE PRESENT THAT,
_____ as

principal and _____ as surety, are held and firmly bound unto the CITY OF WALTHAM and to such persons, firms, and corporations, who may furnish materials for or perform labor on the work, construction or improvements contemplated in the Contract hereinafter mentioned, or who may have any suits or claims for injury or damage to persons or property resulting from or arising out of the work done under this Contract, in the

SUM OF _____DOLLARS ($_____)
(lawful money of the United States of America) for the payment whereof the Contractor and the Surety of Sureties bind themselves and their heirs, executors, administrators, successors and assigns, jointly and severally, firmly by these presents.

THE CONDITION OF THIS OBLIGATION IS SUCH, THAT for the above burden (the Contractor) its

_____
heirs, executors, administrators and assigns, shall faithfully perform the Contract, on his part and during the life of any guaranty or warranty, for defective materials and workmanship required under this Contract, and satisfy all claims and demands incurred for the same; and shall fully indemnify and save harmless the City from all cost and damage which it may suffer by reason of failure so to do, and shall fully reimburse and repay the City all outlay and expense which the City may incur in making good any such default, and shall promptly make payment to all persons supplying labor or materials for use in the prosecution of the work provided for in said Contract; and shall indemnify and save harmless the said City, its officers and agents from any and all suits or claims for injury or damage to persons or property resulting from or arising our of the work done under this Contract, then this obligation shall be null and void; otherwise it shall remain in full force and effect.

PROVIDED, HOWEVER, that (except as to the City) no suit, action or proceeding by reason of any default whatever shall be brought on this Bond after two years from the day on which the final payment under the Contract falls due.

AND PROVIDED, that any alterations which may be made in the terms of the Contract or in the work to be done under it, or any assignment, transfer or subletting of any part of the work, or the giving by the City of any extension of time for the performance of the Contract, or any other forbearance on the part of either the City or the Contractor to the other, shall not in any way release the Contractor and the Surety of Sureties, or either or any of them, their heirs, executors, administrators, successors or assigns from their liability hereunder, notice to the Surety or Sureties of any such alterations, assignment, transfer, subletting extension or forbearance being hereby waived.

This Bond is made for the use and benefit of all persons, firms, and corporations who may furnish materials, or perform any labor for or on account of said work, construction or improvements, or who may have any suits or claims for injury or damage to persons or property resulting from or arising our of the work done under this Contract, and they and each of them are hereby made obligees hereunder the same as if their own proper names were written herein as such, and they and each of them may sue hereon in their own names for their own use and benefit.

And the Surety, for value received, hereby stipulates and agrees that no change, extension of time, alteration or addition to the terms of the Contract or to the work to be performed hereunder, or the Specifications accompanying the same, shall in any way affect its obligations on this Bond, and it does hereby waive notice of any such changes, extension of time, alteration or addition to the terms of the Contract or to the work, or to the Specifications.

IN WITNESS WHEREOF, said Contractor and Surety have hereunto set their respective names this _____ day of _____, 20_____.

WITNESSES:

(CONTRACTOR) (SEAL)

NAME _____ BY _____
(SIGNATURE AND TITLE)

ADDRESS _____
(SURETY) (SEAL)

NAME _____ BY _____
(SIGNATURE AND TITLE)

ADDRESS _____ BY _____
(ATTORNEY-IN-FACT)

POWER OF ATTORNEY
Attorneys-in-fact who sign bonds must file with each bond a certified copy of their power of attorney to sign said bonds.

SECTION 00502

PAYMENT BOND

CITY OF WALTHAM

KNOW ALL MEN BY THESE PRESENT THAT,
_____ as

principal and _____ as
surety, are held and firmly bound unto the CITY OF WALTHAM and to such persons, firms, and corporations, who may furnish materials for or perform labor on the work, construction or improvements contemplated in the Contract hereinafter mentioned, or who may have any suits or claims for injury or damage to persons or property resulting from or arising out of the work done under this Contract, in the

SUM OF _____DOLLARS ($_____)
(lawful money of the United States of America) for the payment whereof the Contractor and the Surety of Sureties bind themselves and their heirs, executors, administrators, successors and assigns, jointly and severally, firmly by these presents.

THE CONDITION OF THIS OBLIGATION IS SUCH, THAT for the above burden (the Contractor) its

_____
heirs, executors, administrators and assigns, shall faithfully perform the Contract, on his part and during the life of any guaranty or warranty, for defective materials and workmanship required under this Contract, and satisfy all claims and demands incurred for the same; and shall fully indemnify and save harmless the City from all cost and damage which it may suffer by reason of failure so to do, and shall fully reimburse and repay the City all outlay and expense which the City may incur in making good any such default, and shall promptly make payment to all persons supplying labor or materials for use in the prosecution of the work provided for in said Contract; and shall indemnify and save harmless the said City, its officers and agents from any and all suits or claims for injury or damage to persons or property resulting from or arising our of the work done under this Contract, then this obligation shall be null and void; otherwise it shall remain in full force and effect.

PROVIDED, HOWEVER, that (except as to the City) no suit, action or proceeding by reason of any default whatever shall be brought on this Bond after two years from the day on which the final payment under the Contract falls due.

AND PROVIDED, that any alterations which may be made in the terms of the Contract or in the work to be done under it, or any assignment, transfer or subletting of any part of the work, or the giving by the City of any extension of time for the payment of the Contract, or any other forbearance on the part of either the City or the Contractor to the other, shall not in any way release the Contractor and the Surety of Sureties, or either or any of them, their heirs, executors, administrators, successors or assigns from their liability hereunder, notice to the Surety or Sureties of any such alterations, assignment, transfer, subletting extension or forbearance being hereby waived.

This Bond is made for the use and benefit of all persons, firms, and corporations who may furnish materials, or perform any labor for or on account of said work, construction or improvements, or who

may have any suits or claims for injury or damage to persons or property resulting from or arising our of the work done under this Contract, and they and each of them are hereby made obligees hereunder the same as if their own proper names were written herein as such, and they and each of them may sue hereon in their own names for their own use and benefit.

And the Surety, for value received, hereby stipulates and agrees that no change, extension of time, alteration or addition to the terms of the Contract or to the work to be performed hereunder, or the Specifications accompanying the same, shall in any way affect its obligations on this Bond, and it does hereby waive notice of any such changes, extension of time, alteration or addition to the terms of the Contract or to the work, or to the Specifications.

IN WITNESS WHEREOF, said Contractor and Surety have hereunto set their respective names this __ _____ day of _____, 20_____.

WITNESSES:

(CONTRACTOR) (SEAL)

NAME _____ BY _____
(SIGNATURE AND TITLE)

ADDRESS _____
(SURETY) (SEAL)

NAME _____ BY _____
(SIGNATURE AND TITLE)

ADDRESS _____ BY _____
(ATTORNEY-IN-FACT)

POWER OF ATTORNEY
Attorneys-in-fact who sign bonds must file with each bond a certified copy of their power of attorney to sign said bonds.

SECTION 00503

GENERAL CONDITIONS

1. **INFORMATION**

   All information shall come from the Office of the City Purchasing Agent. The Contractor shall inquire at this office for any information needed. Wherever the words "or equal as approved" are used, it is to be understood that the opinion of the City Purchasing Agent shall govern.

2. **SUITS**

   The Contractor shall assume defense of and shall indemnify and hold the City and its agents harmless from all suits and claims against the City and its sub-contractors arising from the use of any invention, patent right labor or employment, or from any act of omission or neglect of the City, its agents, employees or any subcontractor in performing the work, under this contract.

3. **LAWS AND REGULATIONS**

   The Contractor shall conform to all the applicable rules, regulations, laws and ordinances of the City of Waltham, the Commonwealth of Massachusetts, the United States of America and all agencies having jurisdiction over this contract.

4. **PROTECTION OF PROPERTY**

   The Contractor shall take all proper precautions to protect the City's property from damage and unnecessary inconvenience. Any City property damaged by the Contractor in carrying out the provisions of this contract shall be restored to its original condition, by and at the expense of the Contractor.

5. **PROTECTION OF PERSONS**

   The Contractor shall take all proper precautions to protect persons from injury, unnecessary inconvenience, and shall be responsible for his failure to do so. The Contractor agrees to hold the City harmless from any and all liabilities of every nature and description, which may be suffered through bodily injury, including death, to any person, by reason of negligence of the Contractor, his agents or employees, or any subcontractor.

6. INSURANCE

A. WORKMAN'S COMPENSATION: The Contractor shall provide by insurance for the payment of compensation and furnishing of other benefits under Chapter 152 of the General Laws of the Commonwealth of Massachusetts to all persons to be employed under this contract, the premiums for which shall be paid by the Contractor.

B. COMPREHENSIVE GENERAL LIABILITY

Bodily Injury:	$1,000,000 Each Occurrence
	$2,000,000 Aggregate
Property Damage:	$1,000,000 Each Occurrence
	$2,000,000 Aggregate

C. AUTOMOBILE (VEHICLE) LIABILITY

Bodily Injury	$2,000,000 Each Occurrence
Property Damage	$1,000,000 Aggregate

D. UMBRELLA POLICY

General liability	$2,000,000

Your bid response must include a Certificate of Insurance with the above limits as a minimum. In addition, the Certificate of Insurance must have the following text contained in the bottom left box of the Certificate: "The City of Waltham is a named Additional Insured for all Insurance". The Certificate of Insurance must be mailed directly to:

Office of the Purchasing Agent
Purchasing Department
City of Waltham
610 Main Street
Waltham, MA 02452

7. LABOR AND MATERIALS BOND

The Contractor agrees to execute and deliver to the City, a Performance Bond and a Payment Bond **each** equal to 100% of the contract value. This contract shall not be in force until said bond has been delivered and accepted by the City. Bond to be issued by a company licensed by the Commonwealth of Massachusetts.

INCLUDE A LETTER FROM A SURETY COMPANY CERTIFYING THAT THE CONTRACTOR IS QUALIFIED AND CAPABLE OF OBTAINING THE ABOVE BONDS WITH HIS/HERS BID.

8. **PERSONNEL**:

The Contractor shall employ a competent supervisor and all properly licensed personnel necessary to perform the services required in this contract. The City Purchasing Agent shall have the right to require the Contractor to remove and/or replace any of the personnel for nonperformance or for unprofessional behavior. The City Purchasing Agent may require the Contractor to submit a weekly performance record of the areas and of the work performed, on forms approved by the City Purchasing Agent. The Contractor or his supervisor shall be available to inspect such work as required by the City Purchasing Agent.

9. PREVAILING WAGES

The Contractor is required to pay the prevailing wages as determined under the provisions of Chapter 149, Sections 26 and 27D of the Massachusetts General Laws, including the submission of weekly payrolls to the awarding authority. Copies of the Prevailing Wage Schedule is found on line at www.city.waltham.ma.us/open-bids

10. MATERIALS

The City or its Agent reserves the right to approve or reject any supplies, material or equipment used by the Contractor. The Contractor agrees to replace any supplies, material or equipment used by the Contractor. The Contractor agrees to replace any rejected supplies, materials or equipment, to the satisfaction of the City or its Agents.

11. TERMINATION OF CONTRACT

This contract may be terminated by the City upon deliverance to the Contractor of a five-day written notice of said termination.

12. CONTRACT OBLIGATIONS

Contract obligations on behalf of the City are subject to an annual appropriation to cover the contract obligation.

13. BIDDER EXPERIENCE EVALUATION

Each bidder shall submit with his bid, all the information relative to their experience and qualifications in performing the work required under this contract and shall have been in business for a minimum of five (5) years, in order for their bid to be considered.

14. NOT-TO-EXCEED AMOUNT

The bid amount proposed in your company's response is a "not-to- Exceed" amount unless the City makes changes, in writing, to the scope of work to be performed. The Change Order must be signed and approved by the City's Purchasing Agent, City Auditor, Law Department and the Mayor prior to the commencement of the change order work. No work is to begin until the proper approvals have been obtained. A change order will be priced at the unit price. Failure to comply with this procedure will result in the cancellation of the contract and the non-payment of services provided

16. FINANCIAL STATEMENTS.

The City may require, within five (5) days after the bid opening, a complete and detailed Financial Statement prepared by a Certified Public Account, to determine a bidder's financial stability.

17 BREACH OF CONTRACT/ NON PERFORMANCE

If the Contractor shall provide services in a manner, which is not to the satisfaction of the City, the City may request that the Contractor refurnish services at no additional cost to the City until approved by the City. If the Contractor shall fail to provide services, which are satisfactory to the City, the City in the alternative may make any reasonable purchase or Contract to purchase services in substitution for those due from the Contractor. The City may deduct the cost of any substitute Contract for nonperformance of services together with incidental and consequential damages from the Contract price and shall withhold such damages from sums due or to become due to the Contractor. If the damages sustained by the City exceed sums due or to become due, the Contractor shall pay the difference to the City upon demand. The Contractor shall not be liable for any damages sustained by the City due to the Contractor's failure to furnish services under the terms of this Contract if such failure is in fact caused by the occurrence of a contingency the nonoccurrence of which was a basic assumption under which this Contract was made, including a state of war, embargoes, expropriation of labor strike or any unanticipated federal, state or

municipal governmental regulation of order, provided that the Contractor has notified the City in writing of such cause within seven (7) days after its occurrence.

18 RIGHT TO AUDIT

The City of Waltham has the right to review and audit documents related to this contract. This right extends to any subcontractor, supplier or other entity used by the prime contractor to fulfill the obligations under this contract.

19. **CITY ORDINANCE. APPROVAL OF CONTRACTS BY MAYOR, SEC. 3-12 OF THE CITY ORDINANCES**.

All contract made by any department, board or commission where the amount involved is two thousand dollars ($2,000) or more shall be in writing, and no such contract shall be deemed to have been made or executed until the approval of the Mayor is affixed thereto. Any construction contract shall, and all other contracts may, where the contract exceed five thousand dollars ($5,000) be required to be accompanied by a bond with sureties satisfactory to the Mayor.

20. **BID OPENING INCLEMENT WEATHER**

If, at the time of the originally scheduled bid opening, City Hall is closed to inclement weather or another unforeseeable event, the bid opening will be extended until 2:00 PM on the next normal business day. Bids will be accepted until that date and time.

21 **FUNDS APPROPRIATION.**

THE CONTRACT OBLIGATION ON BEHALF OF THE CITY IS SUBJECT TO PRIOR APPROPRIATION OF MONIES FROM THE GOVERNMENTAL BODY AND AUTHORIZATION BY THE MAYOR.

22 THE AWARDING AUTHORITY RESERVES THE RIGHT TO REJECT ANY OR ALL BIDS, OR ANY PART OF ANY BID, WHICH IN THE OPINION OF THE AWARDING AUTHORITY, IS IN THE BEST INTERESTS OF THE CITY OF WALTHAM.

Section 00504

Compliance

These documents must be signed and returned with your bid

Compliance

The compliance documents in this section must be completed, signed and returned **with your bid package**.

Purchasing Department

City of Waltham
610 Main Street
Waltham, MA 02452

Failure to submit the completed documents will cause the disqualification of the proposal.

Section Index

Check when Complete

- Non-collusion form and Tax Compliance form…… _____
- Corporation Identification Form…….. _____
- Certificate of Vote Authorization……. _____
- Certificate of Insurance (showing all limits of WC &GL)..... _____
- Three (3) References…… _____
- 5% Bid Bond or Certified Check>..... _____
- Debarment Certificate …….. _____
- Prevailing Wage Certificate……. _____
- Right-to-know Law…… _____
- OSHA 10 Certificate for all Assigned Employees (MGL ch30, §39M and Ch 149) _____

Before the commencement of the Job, the contractor must provide to the above office:

- Performance and Payment Bonds each for 100% of the contract value and naming the City of Waltham

Your Company's Name: _____

Service or Product Bid_____

NOTE: Failure to submit any of the required documents, in this or in other sections, with your bid response package may cause the disqualification of your proposal.

NON-COLLUSION FORM AND TAX COMPLIANCE FORM

CERTIFICATE OF NON-COLLUSION

The undersigned certifies under penalties of perjury that this bid or proposal has been made and submitted in good faith and without collusion or fraud with any other person. As used in this certification, the word "person" shall mean any natural person, business, partnership, corporation, union, committee, club, or other organization, entity or group of individuals. The undersigned certifies that no representations made by any City officials, employees, entity, or group of individuals other than the Purchasing Agent of the City of Waltham was relied upon in the making of this bid

_____, _____
(Signature of person signing bid or proposal) Date

_____
(Name of business)

TAX COMPLIANCE CERTIFICATION

Pursuant to M.G.L. c. 62C, & 49A,I certify under the penalties of perjury that, to the best of my knowledge and belief, I am in compliance with all laws of the Commonwealth relating to taxes, reporting of employees and contractors, and withholding and remitting child support.

_____, _____
Signature of person submitting bid or proposal Date

_____
Name of business

NOTE

Failure to submit any of the required documents, in this or in other sections, with your bid response package may cause the disqualification of your proposal.

CERTIFICATE OF VOTE OF AUTHORIZATION

Date:

I _____, Clerk of_____hereby certify that at a meeting of the Board of Directors of said Corporation duly held on the_____day of_____at which time a quorum was present and voting throughout, the following vote was duly passed and is now in full force and effect:

VOTED: That _____(*name*) is hereby authorized, directed and empowered for the name and on behalf of this Corporation to sign, seal with the corporate seat, execute, acknowledge and deliver all contracts and other obligations of this Corporation; the execution of any such contract to be valid and binding upon this Corporation for all purposes, and that this vote shall remain in full force and effect unless and until the same has been altered, amended or revoked by a subsequent vote of such directors and a certificate of such later vote attested by the Clerk of this Corporation.

I further certify that_____ is duly elected/appointed_____ _____of said corporation

SIGNED:

(Corporate Seal)

_____

Clerk of the Corporation:

Print Name: _____

COMMONWEALTH OF MASSACHUSETTS

County of_____ **Date:**

Then personally appeared the above named and acknowledged the foregoing instrument to be their free act and deed before me,_____

Notary Public;

My Commission expires: _____

CORPORATION IDENTIFICATION

The bidder for the information of the Awarding Authority furnishes the following information.

If a Corporation:

Incorporated in what state _____

President _____

Treasurer _____

Secretary _____

Federal ID Number_____

If a foreign (out of State) Corporation – Are you registered to do business in Massachusetts?

Yes _____, No _____

If you are selected for this work you are required under M.G.L.ch. 30S, 39L to obtain from the Secretary of State, Foreign Corp. Section, State House, Boston, a certificate stating that you Corporation is registered, and furnish said certificate to the Awarding Authority prior to the award.

If a Partnership: (Name all partners)

Name of partner _____

Residence _____

Name of partner _____

Residence _____

If an Individual:

Name _____

Residence _____

If an Individual doing business under a firm's name:

Name of Firm _____

Name of Individual _____

Business Address _____

Residence _____

Date _____

Name of Bidder _____

By _____

Signature

_____

Title

_____

Business Address (POST OFFICE BOX NUMBER NOT ACCEPTABLE)

_____

State Telephone Number Today's Date

PROVIDE THREE (3) SERVICE APPROPRIATE REFERENCES

1. Company Name:
   Address:
   Contact Name:
   Phone #
   Type of service/product provided to this Company:

   Dollar value of service provided to this Company:

2. Company Name:
   Address:
   Contact Name:
   Phone #
   Type of service/product provided to this Company:

   Dollar value of service provided to this Company:

3. Company Name:
   Address:
   Contact Name:
   Phone #
   Type of service/product provided to this Company:

   Dollar value of service provided to this Company:

NOTE

Failure to submit any of the required documents, in this or in other sections, with your bid response package will be cause for the disqualification of your company.

WEEKLY PAYROLL RECORDS REPORT &
STATEMENT OF COMPLIANCE

In accordance with Massachusetts General Law c. 149, §27B, a true and accurate record must be kept of all persons employed on the public works project for which the enclosed rates have been provided, A Payroll Form has been printed on the reverse of this page and includes all the information required to be kept by law. Every contractor or subcontractor is required to keep these records and preserve them for a period of three years from the date of completion of the contract.

In addition, every contractor and subcontractor is required to submit, on a weekly basis, a copy of his or her weekly payroll records to the awarding authority. For every week in which an apprentice is employed, a photocopy of the apprentice's identification card must be attached to the payroll report. Once collected, the awarding authority is also required to preserve those reports for three years.

In addition, each such contractor, subcontractor, or public body shall furnish to the awarding authority directly, within fifteen days after completion of its portion of the work, a statement, executed by the contractor, subcontractor or public body who supervises the payment of wages, in the following form:

_____

STATEMENT OF COMPLIANCE

_____, 200____

I_____, _____
(Name of signatory party) (Title)

I do hereby state that I pay or supervise the payment of the persons employed by

_____ on the_____
(Contractor, subcontractor or public body) (Building or project)

and that all mechanics and apprentices, teamsters, chauffeurs and laborers employed on said project have been paid in accordance with wages determined under the provisions of sections twenty-six and twenty-seven of chapter one hundred and forty nine of the General Laws.

Signature_____, Title _____

Print_____

WEEKLY PAYROLL REPORT FORM

Company Name: _____

Project Name: _____

Awarding Auth.: _____

Work Week Ending: _____

☐ Final Report

☐ Prime Contractor

☐ Subcontractor
List Prime Contractor: _____

Employer Signature: _____

Print Name & Title: _____

Employee Name & Address	Work Classification	Hours Worked							(A) Tot. Hrs.	(B) Hourly Base Wage	Employer Contributions			(F) [B+C+D+E] Hourly Total Wage (prev. wage)	(G) [A*F] Weekly Total Amount
		S	M	T	W	T	F	S			(C) Health & Welfare	(D) Pension	(E) Supp. Unemp.		

NOTE: Every contractor and subcontractor is required to submit a copy of their weekly payroll records to the awarding authority.

RIGHT TO KNOW LAW

Any vendor who receives an order or orders resulting from this invitation agrees to submit a Material Safety Data Sheet (MSDS) for each toxic or hazardous substance or mixture containing such substance, pursuant to M.G.L. c. 111F, §§8,9 and 10 and the regulations contained in 441 CMR 21.06 when deliveries are made. The vendor agrees to deliver all containers properly labeled pursuant to M.G.L. c. 111F §7 and regulations contained in 441 CMR 21.05. Failure to furnish MSDS and/or labels on each container may result in civil or criminal penalties, including bid debarment and action to prevent the vendor from selling said substances, or mixtures containing said substances within the Commonwealth. All vendors furnishing substances or mixtures subject to Chapter 111F or M.G.L. are cautioned to obtain and read the laws, rules and regulations referenced above. Copies may be obtained from the State House Bookstore, Secretary of State, State House, Room 117, Boston, MA (617) 727-2834.

Authorized Signature Indicating Compliance with the Right-to-know laws:

_____

Signature **Date**

_____

Print Name

NOTE

Failure to submit any of the required documents, in this or in other sections, with your bid response package may cause the disqualification of your proposal.

DEBARMENT CERTIFICATION

In connection with this bid and all procurement transactions, by signature thereon, the respondent certifies that neither the company nor its principals are suspended, debarred, proposed for debarment, declared ineligible, or voluntarily excluded from the award of contracts, procurement or non procurement programs from the Commonwealth of Massachusetts, the US Federal Government and /or the City of Waltham. "Principals" means officers, directors, owners, partners and persons having primary interest, management or supervisory responsibilities with the business entity. Vendors shall provide immediate written notification to the Purchasing Agent of the City of Waltham at any time during the period of the contract of prior to the contract award if the vendor learns of any changed condition with regards to the debarment of the company or its officers. This certification is a material representation of fact upon which reliance will be placed when making the business award. If at any time it is determined that the vendor knowingly misrepresented this certification, in addition to other legal remedies available to the city of Waltham, the contract will be cancelled and the award revoked.

Company Name _____

Address _____

City _____, **State**_____, **Zip Code** _____

Phone Number (____) _____

E-Mail Address _____

Signed by Authorized Company Representative:

_____

Print name _____,

Date _____

10 HOURS OSHA TRAINING CONFIRMATION

Chapter 306 of the Acts of 2004

CONSTRUCTION PROJECTS

AN ACT RELATIVE TO THE HEALTH AND SAFETY ON PUBLIC

The undersigned hereby certifies that all employees to be employed at a worksite for construction, reconstruction, alteration, remodeling, repair, installation, demolition, maintenance or repair of any public work or any public building estimated to cost more than $10,000.00 have successfully completed a course in construction safety and health approved by the **United States Occupational Safety and Health Administration** that is at least **10 hours** in duration at the time the employee begins work and who shall furnish documentation of successful completion of said course with the first payroll report for each employee and will comply with all laws and regulations applicable to awards of subcontracts subject to section 44F.

Company Name: _____

Address: _____

Signature: _____

Title: _____

Print Name _____

Date_____

See Chapter 306 of the Acts of 2004

NOTE

Failure to submit any of the required documents, in this or in other sections, with your bid response package will be cause for the disqualification of your company.

ELSIE TURNER SPECIFICATIONS AND DRAWINGS

Technical Specifications

Technical Specifications – Elsie Turner Field

DIVISION 1

01010 Summary of Work
01020 Allowances
01025 Measurement and Payment
01028 Change Order
01040 Control of the Work
01050 Field Engineering
01200 Project Meetings
01300 Submittals
01400 Quality Control
01571 Order of Conditions
01500 Temporary Facilities
01700 Project Close-out

DIVISION 2

02100 Site Preparation and Demolition
02150 Existing Trees to Remain
02200 Earthwork
02500 Granite Curb
02510 Bituminous Concrete Paving
02515 Precast Concrete Pavers
02540 Safety Surfacing
02595 Traffic Pavement Marking
02667 Water Service Systems
02670 Backflow Preventer Cabinet
02725 Drainage & Sewer Pipe
02728 Drainage Structures
02805 Benches & Picnic Tables
02810 Bicycle Racks
02810 Irrigation System
02815 Big Belly Kiosks
02825 Chain Link Fencing
02830 Welded Wire Fence
02832 Segmental Gravity Retaining Wall
02835 Steel Service Gate
02845 Wood Guardrail
02848 Athletic Equipment
02850 Scoreboard
02860 Playground Equipment
02875 Shade Shelters & Dugouts
02891 Traffic Signs
02901 Planting Soils
02902 Fertilizer
02925 Lawns & Native Grasses
02950 Planting
03300 Cast-in-Place Concrete
09614 Detectable Warning Panels
11485 Sports Netting
13125 Aluminum Bleachers & Players Benches
16100 Electrical Service Systems
16526 Exterior Athletic Lighting

Appendix A – Order of Conditions

Division I

SECTION 01010

SUMMARY OF WORK

PART 1- GENERAL

1.01 PROJECT DESCRIPTION

A. The project consists of improvements to the existing Elsie Turner Field, 421 Trapelo Road, Waltham, MA 02452 as described in the Contract Documents.

1.02 WORK TO BE DONE

A. The work of this Contract includes, but is not limited to:

1. Demolition of miscellaneous park elements as shown on the Demolition plan.

2. Installation of the following items supplied by the Owner:

(a) Play Equipment

3. The Contractor shall furnish and install all other improvements noted on the Drawings which are not specifically listed as furnished by the Owner. These include but are not necessarily limited to site preparation and demolition, earthwork, site drainage, retaining wall, parking lot and curb cuts, bituminous concrete paving, precast unit pavers on bituminous setting bed and concrete base, safety surfacing, line painting and color coating, cast-in-place concrete curb walls, chain link and welded wire fencing, steel gate, site furniture, wood guardrails, metal shade shelter, fabric shade shelters, bleachers, dugouts, softball field and accessories, safety netting, athletic lighting, adult exercise equipment, electronic scoreboard, electrical service and irrigations systems, seeding and sodding, and planting and miscellaneous site improvements.

1.03 SPECIAL CONDITIONS

A. The project is subject to an Order of Conditions issued by the Waltham Conservation Commission and MA DEP. The Work this project includes compliance with the stipulations of the Order. The Order is included in these Specifications as Appendix A.

1.03 CONTRACT TIME

A. The time for Substantial Completion of the work is as stated in the bidding documents.

B. The Contractor shall submit shop drawings, data and samples and place his/her orders sufficiently early to permit consideration and approval by the Landscape Architect before materials are necessary for incorporation into the Work. Any delay resulting from the Contractor's failure to do so shall not be used as a basis of a claim against the

Owner.

1.04 CONTRACT DOCUMENTS

A. The Contract Documents are enumerated in the Agreement, and include these Specifications and the Drawings, for the City of Waltham, by Carolyn Cooney & Associates, Landscape Architects, 13 Elm Street, Milford, MA 01757.

1.05 INSPECTION OF THE SITE

A. It is a requirement of the Contract that the Contractor and his/her subcontractors shall have thoroughly inspected the site during the bidding period. By submitting a bid they confirm that they are thoroughly familiar with the site and all existing conditions which impact and affect their work. Requests for extra compensation will not be considered for any work which could have been foreseen by a visual inspection of the site.

1.06 CONTRACTOR'S USE OF THE SITE

A. The Contractor shall furnish his/her own toilet facilities on-site.

B. The Contractor shall take all precautions necessary to protect the abutting properties during construction. Any and all damage caused by construction operations shall be repaired.

C. The project site shall be kept clean and free from accumulation of waste material and debris.

1. The Contractor, his/her Subcontractors, and their employees shall be respectful and courteous of the neighborhood while working on site.

1.07 CITY OF WALTHAM NOISE ORDINANCE

A. The Contractor is advised that the City of Waltham has a Noise Ordinance, Section 10-6, which has the authority to regulate the noise generating activities of this Contract. In general the Ordinance prohibits excessive noise created by construction, building, remodeling, excavating, land clearing, or by any of the equipment associated with such work. The Police Department considers the startup or idle running of truck engines and/or equipment prior to 7:00 AM a violation.

1.08 ENCLOSURES

A. Provide at the earliest practical time temporary enclosure of materials, work in progress and completed portions of the work to provide protection to the work and the employees.

1.09 SAFETY AND SECURITY

A. The Contractor shall be responsible for the safety and security of those areas of the park site where construction is occurring and for the safety of all persons who enter within the Contract Limit Line.

1. The playground shall be closed to the public throughout the duration of construction activity. Gates or other temporary openings in the fencing used to allow construction personnel or equipment access shall be maintained closed at all times to prevent access by the public.

2. The Contractor shall provide signage, in locations as indicated on the Drawings and as described 01500-Temporary Controls & Facilities, indicating the temporary closure of the park.

3. Safety measures shall include all those actions deemed necessary by the Contractor to ensure the safety of park users. These shall include but are not necessarily limited to:

(a) Temporary fencing at perimeter of the park as indicated on the Drawings.

(b) Filling in of all excavations at the end of the work day.

B. The Contractor shall be responsible for initiating, maintaining, and supervising all safety precautions & programs in connection with the work. He/she shall promulgate safety regulations and shall notify the Owner of particular hazards.

C. The Contractor shall erect and maintain, as required by existing conditions and progress of work, all reasonable safeguards for safety and security. This includes the construction of barriers and the posting of danger signs and other warnings against hazards. By these and other necessary methods the Contractor shall stop unauthorized entry within the Contract Limit of Work Line, which for this project is defined by the temporary construction fencing shown on the Drawings.

D. The Contractor is responsible for provision of additional safeguards not specifically required by the Drawings if these are necessary to protect health and safety.

E. The Contractor shall cooperate with and maintain a close liaison with the Recreation Department, Planning Department, Police Department, and Fire Department, and he/she shall abide by safety or security related requests from any of these authorities.

END OF SECTION

SECTION 01020

ALLOWANCES

PART 1- GENERAL

1.01 ALLOWANCE FOR POLICE DETAIL

A. The Contractor shall include as a line item in his/her bid, an allowance in the amount of Nine Thousand dollars ($9,000) for the cost of police detail. This sum shall be included in the total bid price proposed by the Contractor.

B. This allowance will cover the cost to the Contractor for police detail, if required to complete the work of this Contract.

1. The cost for police detail will be reimbursed to the Contractor as described in Section 1040 - Control of Work, Section 1.05 Traffic Police.

C. If the cost for Police Detail is more or less than the allowance, the Contract Sum shall be adjusted accordingly by Change Order.

D. The allowance and reimbursement for police detail does not include any provisions for Contractor overhead and profit or other expenses related to police detail, other than the direct costs billed to the Contractor by the City of Waltham Police Department.

1.02 ALLOWANCE FOR UNFORSEEN CONDITIONS

A. The intent of this Allowance is for changes in the work related to unanticipated subsurface conditions the mitigation of which is necessary to complete the work of the project. The Sum to be included for this Allowance shall be Ninety Thousand dollars ($90,000). This sum shall be included in the total bid price proposed by the Contractor, and shall be shown as a line item on the Bid Form.

B. The work relating to this Allowance will be completed only when and as directed by the Owner. The Contractor may not proceed with any work under this Allowance without the written notice of the Owner, at a mutually agreed upon fair and equitable price for the change in the work.

C. If at the completion of the project, the cost for this work is more or less than the Allowance, the Contract Sum shall be adjusted accordingly by Change Order.

END OF SECTION

SECTION 01025

MEASUREMENT AND PAYMENT

PART 1- GENERAL

1.01 BASE BID & ALTERNATES

A. Measurement & Payment

1. Payment for construction of Improvements to Elsie Turner Field will be on a lump-sum basis.

2. Payment of the lump-sum price under the Base Bid of the Proposal will fully compensate the Contractor for furnishing all labor, materials, equipment and incidentals required for work described in Section 01010, Summary of Work of this Specification.

1.02 PAYMENT PROCEDURES

A. Contractor shall submit substantiated monthly estimates for progress payments. The period covered by each Application for Payment shall be one (1) calendar month ending on the last day of the month.

B. Payment will be made in accordance with the requirements of Section 39K, M.G.L.

C. Initial Application for Payment: Administrative actions and submittals that must precede or coincide with submittal of first Application for Payment include the following:

1. List of subcontractors.
2. Schedule of Values.
3. Contractor's Construction Schedule (preliminary if not final).
4. Products list.
5. Submittals Schedule (preliminary if not final).
6. Copies of permits.
7. Initial progress report.
8. Certificates of insurance and insurance policies.

D. Refer to Section 01700 - Project Close-out for additional requirements for payments at Substantial Completion and Final Completion.

1.03 ADDITIONAL WORK

A. Additional Work, if any, shall be performed at a mutually satisfactory price agreed upon between the Contractor and the Owner through the process described in Section 01028 - Change Order Procedure.

END OF SECTION

SECTION 01028

CHANGE ORDER PROCEDURE

PART 1 - GENERAL

1.01 GENERAL PROVISIONS

A. Attention is directed to Attachment A and D of the Contract, concerning Change Orders. All Change Orders must be signed and approved by the Mayor of Waltham, the Chief Procurement Officer and the City Auditor prior to execution of the Work.

1.02 SCOPE OF WORK

A. Work included: Make such changes in the Work, in the Contract Sum, in the Contract Time of Completion, or any combination thereof, as are described in written Change Orders signed by the Owner and issued after execution of the Contract, in accordance with the provisions of this Section.

1.03 SUBMITTALS

A. Make submittals directly to the Landscape Architect at the address shown on the Project Manual.

B. Prepare in accordance with change order format in Appendix A of the Contract.

1.04 PRODUCT HANDLING

A. Maintain a “Register of Proposal Requests and Change Orders” at the job Site, accurately reflecting current status of all pertinent data.

B. Make the Register available to the Landscape Architect/Engineer for review at his/her request.

1.05 CHANGES INITIATED BY THE OWNER

A. Should the City contemplate making a change in the Work or a change in the Contract Time of Completion, the Landscape Architect will issue a “Proposal Request” to the Contractor.

1. Proposal Requests will be dated and will be numbered in sequence.

2. The Proposal Request will describe the contemplated change, and will carry one of the following instructions to the Contractor:

(a) Make the described change in the Work at no change in the Contract Sum and no change in the Contract Time of Completion.

(b) Make the described change in the Work, credit or cost for which will be determined in accordance with pertinent paragraphs of Appendix D <u>Change Orders</u>.

1.06 CHANGES INITIATED BY THE CONTRACTOR

A. Should the Contractor discover a discrepancy among the Contract Documents, a concealed condition, or other cause for suggesting a change in the Work, a change in the Contact Sum, or a change in the Contact Time of Completion, he shall notify the Landscape Architect.

B. Upon agreement by the Landscape Architect that there is reasonable cause to consider the Contractor's proposed change, the Landscape Architect will issue a Proposal Request in accordance with the provisions described in Article 1.05 above.

1.07 PROCESSING PROPOSAL REQUESTS

A. In response to each Request for Proposal, the Contractor shall:

1. Submit to the Landscape Architect for review one copy of completed Change Order Form (Appendix A of the Contract).

2. Meet with the Landscape Architect as required to explain costs and, when appropriate, to determine other acceptable ways to achieve the desired objective.

3. Alert pertinent personnel and subcontractors as to the impending change and, to the maximum extent possible, avoid such work as would increase the Owner's cost for making the change, advising the Landscape Architect in writing when such avoidance no longer is practicable.

B. Upon the signature of the Chief Procurement Officer and the City Auditor, the Landscape Architect will issue a "Change Order" to the Contractor.

1.08 CHANGE ORDERS

A. Change Orders will be dated and will be numbered in sequence.

B. The Change Order will describe the change or changes and will refer to the Proposal Request(s) involved.

C. The Landscape Architect will issue four copies of each Change Order to the Contractor.

1. The Contractor promptly shall sign all four copies and transmit all four copies to the Owner for processing.

END OF SECTION

SECTION 01040

CONTROL OF WORK

PART 1 - GENERAL

1.01 GENERAL PROVISIONS

A. Attention is directed to the General Conditions of the Contract, all Divisions of the Specifications and the Contract Drawings, all of which apply to this section.

1.02 EQUIPMENT

A. The Contractor shall furnish equipment which will be efficient, appropriate, and of sufficient quantity to secure a satisfactory quality of work and a rate of progress which will insure the completion of the Work within the time stipulated in the Contract Documents. If at any time such equipment appears to the Owner to be inefficient, inappropriate or insufficient for securing the quality of work required or for producing the rate of progress aforesaid, he may order the Contractor to increase the efficiency, change the character, or increase the equipment and the Contractor shall conform to such order. Failure of the Owner to give such order shall in no way relieve the Contractor of his obligations to secure the quality of work and rate of progress required. In addition, the Contractor shall maintain his equipment, including mufflers, oil seals or gaskets, and air pollution control devices, in proper working order.

1.03 PROJECT MANAGEMENT

A. The Work must be completed in a continuous uninterrupted operation. The Contractor must use sufficient labor and equipment to complete all the necessary work requirements within a minimum period of time and as stated in the Contract Documents.

B. Prior to the start of work, the Contractor shall submit a Progress Schedule in a bar chart form at the preconstruction meeting to the Landscape Architect for completing the Work. See Section 01300 - Submittals of this Specification.

C. The Contractor is fully responsible for the security and safety of partially completed work until the Project is finally accepted by the Owner and the Landscape Architect.

D. Hours of work for construction activities are limited to 8:00 AM to 4:00 PM Monday through Friday. Any changes to the work schedule must be authorized by the Landscape Architect and City Officials.

E. All work areas shall be secured, and materials and equipment shall be removed at the end of each work day.

F. The Contractor shall retain on the Project during its progress, a competent full-time

representative. This representative shall not be changed except with the consent of the Owner and Landscape Architect. The representative shall be in full charge of the Work and all instructions given to him shall be binding.

1.04 CITY OF WALTHAM NOISE ORDINANCE

A. The Contractor is advised that the City of Waltham has a Noise Ordinance, Section 10-6, which has the authority to regulate the noise generating activities of this Contract. In general the Ordinance prohibits excessive noise created by construction, building, remodeling, excavating, land clearing, or by any of the equipment associated with such work. The Police Department considers the startup or idle running of truck engines and/or equipment prior to 7:00 AM a violation. Permits to waive the noise ordinance must be approved and issued by the Chief of Police.

1.05 TRAFFIC POLICE

A. The Contractor shall provide for traffic control by uniformed police officers during all work within City streets. All bills for police detail must be paid in full by the Contractor. The Contractor will be reimbursed for these payments only after a qualifying bill stamped "Paid" by the City of Waltham Treasurer's Office is submitted to the Landscape Architect for reimbursement. Payment for special duty police will be made to the Contractor at a dollar for dollar reimbursement. Said price and payment shall be full compensation for furnishing all special duty police. The Contractor shall include in the lump sum bid price his/her line item an allowance for police detail as described in Section 01020 - Allowances.

B. The rate of payment for any police officer employed by the Contractor shall be at the rate established by the police department providing services for special duty police officers (MGL 149 34B). Payment shall be made by the Contractor within 30 days of billing. Failure to pay an outstanding bill within 30 days may result in a penalty charge to the Contractor for late payment. There will be no reimbursement for any penalties or late charges that may be assessed against the Contractor for late payment. Furthermore, the Landscape Architect will accept no further requests for payment if police detail bills are more than 30 days in arrears.

1. The estimated cost for police detail is $369.60 per officer per day (8 hrs). One-half day (4hrs) is $184.80, which is the minimum charge per day.

C. It is suggested that payments be made in person at the Treasurer's Office and that a photocopy of the bill be presented to the Treasurer's Office at the same time so that it may be stamped "PAID" and then presented to the Landscape Architect by the Contractor as proof of payment.

D. The Contractor will not be reimbursed for any detail that he fails to cancel when it is not required (inclement weather, change of plans, etc.). Reimbursement shall be made on all qualifying bills stamped "PAID" by the appropriate Treasurer's Office, less any amount for unnecessary details not cancelled by the Contractor, and presented to the

Landscape Architect. Reimbursement may be entered in the next following request for payment.

1.06 SITE INVESTIGATION OF EXISTING CONDITIONS

A. The Contractor acknowledges that he/she has satisfied him/herself as to the conditions existing at the Site of the Work, the type of equipment required to perform the Work, the quality and the quantity of the materials to be furnished insofar as this information is reasonably ascertainable from an inspection of the Site, as well as from information presented by the Specifications made a part of the Contract. Any failure of the Contractor to acquaint himself/herself with available information will not relieve him from the responsibility for estimating properly the difficulty or cost of successfully performing the Work.

B. No claim for extra compensation or extension of time will be allowed due to the Contractor's failure to estimate properly the quantities, locations and measurements of all items required to complete the Work.

C. Report any discrepancies to the Landscape Architect and request her/his interpretation.

1.07 PROTECTION OF WORK AREA

A. The Contractor shall secure all work areas by 4:00 PM each work day.

B. All of the Contractor's equipment, supplies, etc. left on-site, shall be secured daily. In no case will the Owner assume responsibility for damage or loss of materials, tools or equipment left on-site.

C. The Contractor shall take precautions to prevent injury to the public due to open excavations or excavated materials. All trenches, excavated materials, equipment, or other obstacles which could be dangerous to the public shall be secured in an agreed upon staging area.

1.08 LAWS AND REGULATIONS

A. The Contractor shall keep himself fully informed of all State and Federal laws and Municipal ordinances and regulations in any manner affecting those engaged or employed in the Work, or the materials used in the Work, or in any way affecting the conduct of the Work, and of all such orders and decrees of bodies or tribunals having any jurisdiction or authority over the same.

B. If any discrepancy or inconsistency is discovered in the Plans, Specifications, or Contract for the Work in relation to any such laws, ordinances, regulations, orders or decrees, the Contractor shall forthwith report the same to the Landscape Architect in writing. He/she shall at all times himself/herself observe and comply with, and shall cause all his/her agents and employees to observe and comply with all such laws, ordinances, regulations, orders, and decrees, and shall protect and indemnify the Owner and its

officers, agents and servants against any claim or liability arising from or based on the violation of any such laws, ordinances, regulations, and orders or decrees, whether by himself/herself or his/her employees or subcontractors.

1.10 PERMITS AND CODES

A. Under this Contract, all work shall be as shown in the Contract Drawings and Specifications and shall comply with applicable codes and regulations at the local, county, state, and federal levels. All labor, materials, equipment and services necessary to make the Work comply with such requirements shall be provided without additional cost to the Owner.

B. Do not close any street, sidewalk, alley, or passageway. Conduct operations as to interfere as little as possible with the use ordinarily made of roads, driveways, alleys, sidewalks, or other facilities near enough to the Work to be affected thereby.

C. Where code references are given, the latest issue of that Code in effect at the time of bidding shall be used. Code references are given to indicate the minimum quality and performance acceptable. Where Specifications and/or Contract Drawings indicate more stringent requirements, the Specifications or Contract Drawings shall govern.

D. The Contractor, under this Contract shall be responsible for providing and filing all Plans, Specifications and other documents, pay all requisite fees and secure all permits, inspections and approvals necessary for legal installation and operation of the systems and or equipment furnished under this Contract, except as otherwise specified.

1. Fees for City of Waltham permits will be waived by the City.

E. Comply also with applicable provisions of American National Standard Code for Building Construction ANSI Al0.6.

1.11 INSPECTION AND TESTS

A. Testing shall be as specified in Section 01400-Quality Control.

B. All material and workmanship shall be subject to inspection and examination by the Landscape Architect at any and all times during construction.

C. All work that is unsatisfactory, or fails to comply with the Specifications in the opinion of the Landscape Architect or City Officials, shall be corrected by the Contractor at his own expense to the satisfaction of the Landscape Architect.

1.12 SANITARY REGULATIONS

A. The Contractor shall provide adequate sanitary facilities for the use of those employed on the Work. Such facilities shall be made available when the first employees arrive on the Site of the Work, shall be properly secluded from public observation, and shall be

constructed and maintained during the progress of the Work.

B. The Contractor shall maintain the sanitary facilities in a satisfactory and sanitary condition at all times and shall enforce their use. He/she shall vigorously prohibit the committing of nuisance on the Site of the Work, on lands of the Owner, or an adjacent property.

1.13 COORDINATION WITH UTILITIES

A. The Contractor shall coordinate his/her Work with the utility companies to prevent damages or disruption to existing equipment and to coordinate new utility installations. The Contractor shall contact the utility companies owning underground equipment in the area of his work prior to commencing excavation. Contact with the utility companies shall be made sufficiently in advance so they can properly locate their equipment.

B. The contractor shall be responsible for locating all site items such as utilities which could be affected by this Contract prior to the start of construction. The Contractor shall contact Dig-Safe (1-888-344-7233) prior to the start of construction, and obtain a Certificate verifying that the location work has been completed. Contact the City of Waltham Engineer to verify the location of additional on-site utilities. Contact telephone and communications companies to verify location of cables.

C. All right-of-way and site utilities (water, sewer, drainage) shall be inspected and approved by the City Engineer's Office.

D. Site information: No representations are made indicating subsurface conditions. It is expressly understood that the Owner/Landscape Architect will not be responsible for interpretations or conclusions drawn therefrom by the Contractor.

1.14 FIRE PROTECTION

A. Gasoline and other flammable liquids shall not be stored on site. They shall be dispensed from a UL listed safety containers in conformance with the National Board of Fire Underwriters recommendations. Do not store flammables near buildings.

1.15 CLEANUP

A. During the course of the Work, the Contractor shall keep the Site in as clean and neat a condition as possible. He/she shall dispose of all residue resulting from the work. At the conclusion of the day's work, the Contractor shall leave the entire Site of the Work in a neat and orderly condition.

END OF SECTION

SECTION 01050

FIELD ENGINEERING

PART 1 - GENERAL

1.01 GENERAL PROVISIONS

A. Attention is directed to the General Conditions of the Contract, all Divisions of the Specifications and the Contract Drawings, all of which apply to this section.

B. Examine and coordinate all Contract Drawings and other section of the Specifications for requirements which affect work of this section whether or not such work is specifically mentioned in this section. Coordinate work with other trades to assure the steady progress of all work under the Contract.

1.02 SCOPE OF WORK

A. The Work under this Section consists of, but is not limited to:

1. Field staking the horizontal and vertical alignment of site improvements.

PART 2 - MATERIALS

2.01 LAYOUT AND STAKING

A. The Contractor shall be responsible for furnishing all stakes, pins, and grade markings as required to implement the work of layout and staking and shall make all field adjustments ordered by the Landscape Architect at no extra cost to the Owner.

B. Upon request by the Landscape Architect, the Contractor shall make available to the Owner survey instruments necessary to check proposed vertical and horizontal alignments at no extra cost.

C. All major site features, including parking lot, softball field, walls, play areas, exercise area, biodetention areas and walkways shall be laid out by a Surveyor registered in the State of Massachusetts.

PART 3 - EXECUTION

3.01 SURVEY LAYOUT

A. The Contractor shall use the alignments shown on the Plans to obtain the alignment which shall be approved subject to field adjustments as ordered by the Landscape Architect.

B. The Contractor shall inform the Landscape Architect when the general layout is

completed and shall not begin excavation until the various alignments are approved by the Landscape Architect. Any discrepancies encountered in field conditions shall be reported to the Landscape Architect immediately.

C. The Contractor shall be responsible for maintaining the correct vertical and horizontal alignment of all elements, which responsibility shall not be waived by the Landscape Architect's approval of the basic layout and stakeout.

.

END OF SECTION

SECTION 01200

PROJECT MEETINGS

PART 1 - GENERAL

1.01 GENERAL PROVISIONS

A. Attention is directed to the General Conditions of the Contract, all Divisions of the Specifications, and the Contract Documents, all of which apply to work of this section.

1.02 SCOPE OF WORK

A. Attend project meetings to enable orderly review during progress of the Work, and to provide for systematic discussion of problems, as long as deemed necessary by the Landscape Architect throughout the construction period.

B. The Contractor's relations with his subcontractors and materials suppliers, and discussion relative thereto, are the Contractor's responsibility and normally are not part of Project Meetings content.

1.03 QUALITY ASSURANCE

A. For those persons designated by the Contractor to attend and participate in Project Meetings, provide required authority to commit the Contractor to solutions agreed upon in the Project Meetings.

1.04 MEETING NOTES

A. The Landscape Architect will compile minutes of each Project Meeting and furnish copies to the attendees, Contractor, and Owner before the next scheduled meeting.

PART 2 - NOT USED

PART 3 - EXECUTION

3.01 PRECONSTRUCTION MEETING

A. The Contractor shall arrange for a Preconstruction Meeting within 5 days after the award of contract, prior to commencing any work on site, in order to coordinate between him/herself, his/her Subcontractors, the Owner, and the Landscape Architect the procedures to be followed on the project.

B. Contractor is to coordinate attendance by authorized representatives of the Owner, the Contractor, site work subcontractors, and the Landscape Architect. Authorized representatives of the Owner include the City of Waltham Engineering Department, 119 School Street, Waltham, MA 02451-4596, (781) 314-3830, the City of Waltham Planning Department, 119 School Street, Waltham, MA (781) 314-3370 and the City of Waltham

Recreation Department, 510 Moody Street, Waltham, MA (781) 314-3475.

C. Minimum agenda: Data will be distributed and discussed on at least the following items:

1. Organizational arrangement of Contractor's forces and personnel, and those of subcontractors, materials suppliers and Owner.
2. Channels and procedures for communication.
3. Construction schedule, including sequence of critical work.
4. Contract Documents and revisions.
5. Processing of Shop Drawings and other data submitted to the Owner for review, including the process for reviewing water, sewer and drainage submittals.
6. Processing of Bulletins, field decisions, and Change Orders.
7. Procedures for safety, first aid, security, quality control, housekeeping, and related matters.
8. Submittal of Construction Fence layout.
9. Submittal of Progress Schedule, Tabulation of Submittals and Schedule of Values.

3.02 PROJECT MEETINGS

A. Frequency: Project Meeting shall in general be held at regular intervals not less frequently than once a week. Meetings will be chaired by the Landscape Architect.

B. Location: Project meetings will be held at the job site.

C. Attendance:

1. To the maximum extent practicable, assign the same person or persons to represent the Contractor at Project Meetings throughout the progress of the work.

2. Site work subcontractors, material suppliers, and others may be invited to attend those Project Meetings in which their aspect of the Work is involved.

D. Minimum Agenda:

1. Review progress of the Work since last meetings, including status of submittals for approval.

2. Identify problems which impede planned progress.

3. Develop corrective measures and procedures to regain planned schedule.

4. Complete other current business.

E. Revision to Minutes:

1. Unless published minutes are challenged in writing prior to the next regularly

scheduled Project Meeting, they will be accepted as properly stating the activities and decisions of the meeting.

2. Persons challenging published minutes shall reproduce and distribute copies of the challenge to all indicated recipients of the particular set of minutes.

3. Challenge to minutes shall be settled at the start of the next regularly scheduled meeting.

END OF SECTION

SECTION 01300

SUBMITTALS

PART 1- GENERAL

1.01 GENERAL PROVISIONS

A. Attention is directed to the General Conditions of the Contract, all Divisions of the Specifications, and the Contract Drawings, all of which apply to this section.

B. Consult the individual Sections of the Specifications for the specific submittals required under those sections and for further details and descriptions of the requirements.

1.02 SCOPE OF WORK

A. The scope of the work under this Specification section, without limiting the generality thereof, includes the furnishing of all labor material, equipment, services and incidentals necessary to complete all the work in accordance with the contract documents, which are intended to describe and provide for a finished piece of work.

B. The type of work includes the following without limiting the generality thereof:

1. Progress Schedules.
2. Schedule of Values.
3. Shop drawings.
4. Product Data.
5. Samples.

1.03 QUALITY ASSURANCE

A. Coordination of submittals:

1. Prior to each submittal, carefully review and coordinate all aspects of each item being submitted.

2. Verify that each item and the associated submittal conform in all respects with the specified requirements.

3. By affixing the Contractor's signature to each submittal, certify that this coordination has been performed.

B. Timeliness - The Contractor shall transmit each submittal to the Landscape Architect well in advance of performing related Work or other applicable activities, so that the installation shall not be delayed by processing times, including disapproval and re-submittal (if required), coordination with other submittals, testing, purchasing, fabrication, delivery, and similar sequenced activities. **Items with long lead times for orders such as site furnishings need to be submitted immediately**. No extension of

time will be authorized because of the Contractor's failure to transmit submittals to the Landscape Architect in advance of the Work.

1. Sequence - The Contractor shall transmit each submittal in a sequence which will not result in the approval having to be later modified or rescinded by reason of subsequent submittals which should have been processed earlier or concurrently for coordination.

C. Contractor's Review and Approval - Only submittals received from and bearing the stamp of approval of the Contractor will be considered for review by the Landscape Architect. Submittals shall be accompanied by a transmittal notice stating name of Project, date of submittal, "To" or "From" (Contractor, Subcontractor, Installer, Manufacturer, Supplier), Specification Section or Drawing No. to which the submittal refers, purpose (first submittal, re-submittal), description, remarks, distribution record, and signature of transmitter.

D. "Or-Equals", "or equal as approved" or "or approved equal" - On the transmittal, or on a separate sheet attached to the transmittal, the Contractor shall direct attention to any deviations including minor limitations and variations, from the Contract Documents. Do not assume that the materials, equipment, or methods will be approved as equal unless the item has been specifically so approved for this Work by the Owner.

1. The Contractor and all Subcontractors shall submit to the Landscape Architect for consideration of any Or-Equal substitution, a written point by point comparison containing the name and full particulars of the proposed product to the product named or described in the Contract Documents.

2. Such submittal shall in no event be made later than 30 calendar days prior to the incorporation of the item into the Work. In any case in which the time period specified in the Contract Documents from the Notice to Proceed to Substantial Completion is less than 30 days, this requirement can be waived by the Landscape Architect.

3. Upon receipt of a written request for approval of an Or-Equal substitution, the Landscape Architect shall investigate whether the proposed item shall be considered equal to the item named or described in the Contract Documents. Upon conclusion of the investigation, the Landscape Architect shall promptly advise that the item is, or is not, considered acceptable as an Or-Equal substitution. Such written notice must have the concurrence of the Owner.

4. In no case may an item be furnished on the Work other than the item named or described, unless the Landscape Architect, with the Authority's concurrence, shall consider the item equal to the item so named or described, as provided by M.G.L. c.30 § 39M.

5. The equality of items offered as "equal" to items named or described shall be proved to the satisfaction of the Landscape Architect at the expense of the Contractor or Subcontractor submitting the substitution.

6. The Landscape Architect and/or the Authority may require that full size samples of both the specified and proposed products be submitted for review and evaluation. The Contractor or Subcontractor, as the case may be, shall bear full cost for providing, delivering, and disposal of all such samples.

7. The Contractor or Subcontractor, as the case may be, shall assume full responsibility for the performance of any item submitted as an "Or-Equal" and assume the costs of any changes in any Work which may be due to such substitution.

E. Processing - All costs for printing, preparing, packaging, submitting, resubmitting, handling, inspecting and mailing, or delivering submittals required by this contract shall be included in the Contract Sum.

F. Unless otherwise indicated on the Contract Drawings, or specified, only new materials and equipment shall be incorporated into the Work. All materials and equipment furnished by the Contractor shall be subject to the inspection and approval of the Owner. No materials shall be delivered to the work without prior approval of the Owner.

G. Contractor represents that he has determined and verified all materials, field measurements, and field construction criteria related thereto, or will do so, and that he has checked and coordinated the information contained within such submittals with the requirements of the contract documents.

H. The inspection and approval by the Landscape Architect of shop drawings, product data, and samples is general and does not relieve the Contractor from responsibility for compliance with the requirements of the Contract or for proper dimensions, fitting, construction, and construction sequencing.

I. The Contractor or Subcontractors shall not be relieved of responsibility for any deviation from the Contract Drawings or Specifications unless the Contractor has specifically informed the Landscape Architect in writing of such deviation, and the Landscape Architect has given specific written approval thereof.

J. The Contractor shall submit to the Landscape Architect data relating to materials and equipment he proposes to furnish for the Work. Such data shall be in sufficient detail to enable the Landscape Architect to identify the particular product and to form an opinion as to its conformity to the Specifications. Submittals shall, at minimum, include the following:

1. Name of Manufacturer.
2. Dimensional requirements for the material.
3. Class and/or type of material.
4. Strength requirements for the material.
5. Sieve analysis of fill materials.
6. And any other information that is required in determining conformance of the

submittal with the Specifications or the Contract Drawings.

1.04 LANDSCAPE ARCHITECT'S ACTION

A. The Landscape Architect will review the Contractor's submittals and return them with one of the following actions recorded thereon by appropriate markings:

1. Final Unrestricted Release: Where marked “Approved” the Work covered by the submittal may proceed provided it complies with the requirements of the Contract Documents.

2. Final-But-Restricted Release: When marked “Approved as Noted” the Work may proceed provided it complies with the Landscape Architect's notations or corrections on the submittal and complies with the requirements of the Contract Documents. Acceptance of the Work will depend upon these compliances.

3. Returned for Resubmittal: When marked “Revise & Resubmit” or “Disapproved”, the Work covered by the submittal (purchasing, fabrication, delivery, or other activity) should not proceed. The submittal should be revised or a new submittal resubmitted without delay, in accordance with the Landscape Architect’s notations stating the reasons for returning the submittal.

1.05 PROGRESS SCHEDULES

A. At the Preconstruction Meeting, the Contractor shall submit a progress schedule in bar chart form. Indicate a time bar for each major category or unit of work to be performed, properly sequenced and coordinated with other elements of the work.

B. With the progress schedule, submit a tabulation of all submittals which will clearly show: the submittal name and section, date to Landscape Architect for review, date required back to Contractor to maintain the orderly progress of the work, and those submittals required early because of long lead time for ordering, manufacture or fabrication. The Contractor shall submit shop drawings, data and samples or place his/her order sufficiently early to permit consideration and approval by the Landscape Architect before materials are necessary for incorporation into the Work. Any delay resulting from the Contractor’s failure to do so shall not be used as a basis of a claim against the Owner.

C. Monthly, as the job progresses, submit updates of the original progress schedule to show actual progress on the job and any revisions to the projected completion date.

1.06 SCHEDULE OF VALUES

A. With the progress schedule, submit a schedule of values on an AIA “Request for Payment” form which breaks down the contract price by specification sections. This schedule of values shall be in reasonable correspondence with the Contractor’s actual costs for each Subcontract or trade, and it shall serve as the basis for the evaluation and

approval of monthly requests for Payment as they are submitted.

1.07 SHOP DRAWINGS

A. Shop drawings shall be complete. Give all information necessary or requested in the individual section of the specifications. They shall also show adjoining Work and details of connection thereto.

B. Shop drawings shall be for whole systems. Partial submissions will not be accepted.

C. The Landscape Architect reserves the right to review and approve shop drawings only after approval of related product data and samples. Shop drawings for water, sewer, and drainage will require review by the City Engineer.

D. Shop drawings shall be properly identified and contain the name of the project, name of the firm submitting the shop drawings, shop drawing number, date of shop drawings and revisions, Contractor's stamp of approval, and sufficient spaces near the title block for the Landscape Architect's stamp.

E. The Contractor shall submit to the Landscape Architect one legible original and two copies of each shop drawing. Transparency and prints shall be mailed or delivered in roll form. Each submittal shall be accompanied by a transmittal notice.

F. When the original is returned by the Landscape Architect with the stamp "Revise and Resubmit" or "Disapproved", the Contractor shall correct the original drawing or prepare a new drawing and resubmit the original and two copies thereof to the Landscape Architect for approval. This procedure shall be repeated until the Landscape Architect's approval is obtained.

G. When the original is returned by the Landscape Architect with the stamp "Approved" or "Approved as Corrected", the Contractor shall provide and distribute the copies for all Contractor and Subcontractors use, and in addition submit, within 10 calendar days after approval, 3 prints to the Landscape Architect.

H. The Contractor shall maintain one full set of approved shop drawings at the site.

1.08 SUBMISSION OF PRODUCT DATA

A. The Contractor shall submit 6 copies of Product Data to the Landscape Architect. All such data shall be specific and identification of material or equipment submitted shall be clearly marked in ink. Data of general nature will not be accepted.

B. Product Data shall be accompanied by a transmittal notice. The Contractor's stamp of approval shall appear on the printed information itself, in a location which will not mar legibility.

C. Product Data returned by the Landscape Architect as "Disapproved" shall be resubmitted in 6 copies until the Landscape Architects approval is obtained.

D. When the Product Data are acceptable, the Landscape Architect will stamp them "Approved" or "Approved as Corrected," retain 3 copies, and return 4 copies to the Contractor. The Contractor shall provide and distribute additional copies as may be required to complete the Work.

E. The Contractor shall maintain one full set of approved, original, Product Data at the site.

1.09 SUBMISSION OF SAMPLES

A. Unless otherwise specified in the individual section, the Contractor shall submit two specimens of each sample.

B. Samples shall be of adequate size to permit proper evaluation of materials. Where variations in color or in other characteristics are to be expected, samples shall show the maximum range of variation. Materials exceeding the variation of approved samples will not be approved in the Work.

C. Samples which can be conveniently mailed shall be sent directly to the Landscape Architect, accompanied by a transmittal notice. All transmittals shall be stamped with the Contractor's approval stamp of the material submitted.

D. All other samples shall be delivered to the project site with sample identification tag attached and properly filled in. Transmittal notice of samples so delivered with the Contractor's stamp of approval shall be mailed to the Landscape Architect.

E. If a sample is rejected by the Landscape Architect, a new sample shall be resubmitted in a manner specified hereinabove. This procedure shall be repeated until the sample is approved by the Landscape Architect.

F. Samples will not be returned unless return is requested at the time of submission. The right is reserved to require submission of samples whether or not particular mention is made in the Specifications.

END OF SECTION

SECTION 01400

QUALITY CONTROL

PART 1 - GENERAL

1.01 GENERAL PROVISIONS

A. Attention is directed to the General Conditions of the Contract, all Divisions of the Specifications and the Drawings, all of which apply to this section.

1.02 SCOPE OF WORK

A. The scope of the work under this Specification section, without limiting the generality thereof, includes the furnishing of all labor, materials, equipment, services, and incidentals necessary to complete all of the work in accordance with the Contract Documents, which are intended to describe and provide for a finished piece of work.

B. The work includes the following, without limiting the generality thereof;

1. The Contractor shall make available to the Owner's testing laboratory any samples or specimens which the laboratory may require to perform quality control testing on concrete, fill materials, or other material as the Owner may elect to provide additional testing for.

2. The coordinating and scheduling of work and the giving of timely notice so as to afford the Owner's testing laboratory the opportunity to take samples and make observations or tests.

1.03 TESTING LABORATORY

A. The Contractor is responsible for the costs of tests specifically required in the technical specifications.

B. The Owner may select, engage, and pay for the services of an independent testing laboratory to provide additional testing as the Landscape Architect/Engineer may deem appropriate.

C. Test and retesting of materials which fail the original test shall be paid for by the Contractor.

END OF SECTION

SECTION 01500

TEMPORARY FACILITIES & CONTROLS

PART 1- GENERAL

1.01 GENERAL PROVISIONS

A. Attention is directed to the General Conditions of the Contact, all Divisions of the Specifications and the Contract Drawings, all of which apply to this section.

1.02 SCOPE OF WORK

A. The scope of the work under this Specification section, without limiting the generality thereof, includes the furnishing of all labor, materials, equipment, services, and incidentals necessary to complete all of the work in accordance with the Contract Documents, which are intended to describe and provide for a finished piece of work.

B. The work includes the following, without limiting the generality thereof;

1. Temporary utilities.
2. Field equipment.
3. Barriers and enclosures.
4. Safety and security.
5. Signage.

1.03 TEMPORARY UTILITIES

A. The Contractor is responsible for all temporary electrical distribution, lighting, and water distribution from existing sources.

B. The Contractor shall provide and pay for his own temporary telephone service within the Contract Limit Line.

C. The provision for temporary toilets is included under Section 01010 - Summary of Work.

1.04 FIELD EQUIPMENT

A. The Contractor shall provide a transit, rod and level on site for checking layouts and installations.

1.05 TRAFFIC CONTROL

A. Traffic police will be required for operations within City streets. Refer to Section 01040 - Control of the Work, Section 1.05 for police requirements and cost and Section 01020 - Allowances for allowance to be included in the bid price.

1.06 BARRIERS AND ENCLOSURES

A. The Contractor shall provide and maintain sufficient fencing and warning signs around the work area to limit unauthorized entry within the Contract Limit Line.

B. At the earliest practical time provide temporary enclosure of materials, equipment, work in progress and completed portions of the work to provide protection to the work and employees.

1.07 SAFETY AND SECURITY

A. The Contractor shall be responsible for the safety and security of the site within the Contract Limit Line, and for the safety of all persons who enter within the Contract Limit Line.

1. Gates or other temporary openings in the fencing used to allow construction personnel or equipment access shall be maintained closed at all times to prevent access by the public.

B. The Contractor shall be responsible for initiating, maintaining, and supervising all safety precautions and programs in connection with the work.

C. The Contractor shall erect and maintain, as required by existing conditions and progress of the work, all reasonable safeguards for safety and protection, including posting danger signs and other warnings against hazards, promulgating safety regulations, and notifying the Owner of particular hazards.

1. Provide and install on the temporary fencing four (4) signs indicating temporary closure of the park, as described in Section 1.08 below.

D. The Contractor shall cooperate with and maintain a close liaison with the Police Department and Fire Departments, and he shall abide by safety-related requests from any of these agencies.

1.08 CLOSURE SIGNS

A. Signs indicating temporary closing of the park closing shall be 18" x 30" minimum and shall contain the words “The Park is Closed During Construction for Your Safety. Please Do Not Enter. Thank You for Your Cooperation. Waltham Parks and Recreation Department”

B. Signs shall be of durable exterior grade painted plywood or metal securely mounted on posts or on fencing. Sign shall be professionally lettered and shall be produced by a professional sign shop or manufacturer.

END OF SECTION

SECTION 01571

ORDER OF CONDITIONS

PART I - GENERAL

1.01 SUMMARY

A. The Contract Limit Line and work of this project lies within the 100-foot buffer zone of Bordering Vegetated Wetlands and is therefore under the jurisdiction of the Waltham Conservation Commission and the Massachusetts Department of Environmental Protection. The Waltham Conservation Commission has issued an Order of Conditions, DEP File No. 316-0718 which conditions the work of this project, a copy of which is included as Appendix A, and is a Special Condition of the Contract,

1. The Contractor shall be responsible for reading the Order of Conditions and being familiar with each and every condition which has been set forth.

2. The Contractor shall contact the Waltham Conservation Commission (781-314-3845) after erosion controls, signage, and other required elements are in place, to arrange for a site inspection by the Conservation Commission, prior to any excavation or other construction activities.

3. The Contractor shall be responsible for satisfying the provisions of the Order of Conditions including but not limited to the following:

(a) Signage requirements
(b) Maintenance of existing wetland flags throughout the duration of the project
(c) Erosion, drainage and sedimentation controls
(d) Cooperation with the Conservation Commission inspections.

(1) Designation of a person responsible for supervising and inspecting drainage and erosion controls available on a 24-hour basis to communicate with the Conservation Commission. Provide the name, address, business & home phone number of the project supervisor to the Landscape Architect to forward to the Commission.
(2)

B. The Order of Conditions is included as part of the Contract Documents, in Appendix A.

PART II - PRODUCTS (Not Used)

PART III - EXECUTION (Not Used)

END OF SECTION

SECTION 01700

PROJECT CLOSE-OUT

PART 1- GENERAL

1.01 GENERAL PROVISIONS

A. Attention is directed to the General Conditions of the Contract, all Divisions of the Specifications and the Drawings, all of which apply to this section.

B. Project close-out procedures are subject to the requirements of M.G.L. Chapter 30, Section 39G, excerpted in Division 0, Section 00830.

1.02 SCOPE OF WORK

A. The scope of work under this Specification section, without limiting the generality thereof, includes the furnishing of all labor, materials, equipment, services, incidentals necessary to complete all of the work in accordance with the Contract Documents, which are intended to describe and provide for a finished piece of work.

B. The type of work includes the following, without limiting the generality thereof:

1. Final Cleaning.
2. Substantial Completion
3. Recording as-built information and coordination with others to produce final As-Built Drawings..
4. Warranties.
5. Operating and Maintenance Manuals: Provide one copy to City of Waltham Recreation Department and one copy to City of Waltham Engineering Department, Water/Sewer Division.
6. Final Completion.

1.03 FINAL CLEANING

A. Immediately prior to Substantial Completion of the work, the Contractor shall perform all cleanup work as follows:

1. Remove all waste materials and rubbish from the site and legally dispose of it.

2. Remove all tools, equipment, machinery, surplus material, temporary enclosures, and any other material belonging to the Contractor or his Subcontractors.

3. Clean all surfaces, fixtures, and equipment within the work areas, and any surfaces outside the work area which have been made dirty by the work of the contract. Leave the entire site clean and ready for use.

1.04 SUBSTANTIAL COMPLETION

A. Related Requirements: The Contractor's attention is directed to the General and Supplementary Conditions of the Contract and M.G.L. Chapter 30, Section 39G for additional information covering substantial completion procedures and payments.

1. Substantial Completion is defined in MGL 149 Section 39G, excerpts of which are included in Attachment B, Section 00830 of Division 0.

B. Upon Substantial Completion of the project, the Contractor shall present written certification that the work is substantially complete. The Landscape Architect will promptly, and in no case later than 21 days after the Contractor's certification, respond in writing declaring the work has reached Substantial Completion, or he shall provide an itemized list of incomplete or unsatisfactory items that must be completed to achieve Substantial Completion.

C. Within 65 days after the effective date of a declaration of substantial completion, the Landscape Architect will send the Contractor a Substantial Completion estimate, which will be the balance of the Contract price minus a one percent retention for final completion, amounts to cover any outstanding claims, any amounts estimated to cover incomplete or unsatisfactory work, and the sum of all demands for direct payment made by Subcontractors.

1. Refer to MGL 149 Section 39G for additional information concerning payment, excerpted in Division 0, Section 00830-B.

1.05 AS-BUILT RECORD DRAWINGS (Electronic and Hard-copy)

A. General: The Contractor is responsible for As-Built record drawings and for providing final As-Built drawings in electronic format at the project close-out. Do not use As-Built Record Drawings for construction purposes. Protect As-Built Record Drawings from deterioration and loss. Provide access to As-Built Record Drawings for Architect's and Owner's reference during normal working hours.

1. As-Built Record Drawings: Maintain and submit one set of black-line white prints of As-Built Record Contract Drawings and Shop Drawings.

(a) Mark As-Built Record Prints to show the actual installation where installation varies from that shown originally. Require individual or entity who obtained record data, whether individual or entity is Installer, Subcontractor, or similar entity, to prepare the marked-up As-Built Record Prints.

(1) Give particular attention to information on concealed elements that cannot be readily identified and recorded later.

(2) Accurately record information in an understandable drawing technique.

(3) Record data as soon as possible after obtaining it. Record and check the markup before enclosing concealed installations.

(4) Mark Contract Drawings or Shop Drawings, whichever is most capable of showing actual physical conditions, completely and accurately. Where Shop Drawings are marked, show cross-reference on Contract Drawings.

(b) Mark as-built record sets with erasable, red-colored pencil. Use other colors to distinguish between changes for different categories of the Work at the same location.

(c) Mark important additional information that was either shown schematically or omitted from original Drawings.

(d) Note Construction Change Directive numbers, Change Order numbers, alternate numbers, and similar identification where applicable.

(e) Identify and date each As-Built Record Drawing; include the designation "PROJECT AS-BUILT RECORD DRAWING" in a prominent location. Organize into manageable sets; bind each set with durable paper cover sheets. Include identification on cover sheets.

2. The Landscape Architect will provide the Contractor with an Autocad file of the site plan. The Contractor shall edit the file to provide the City of Waltham with an electronic as-built drawing file at the close-out of the project.

3. Record Specifications: Submit one copy of Project's Specifications, including addenda and contract modifications. Mark copy to indicate the actual product installation where installation varies from that indicated in Specifications, addenda, and contract modifications.

(a) Give particular attention to information on concealed products and installations that cannot be readily identified and recorded later.
(b) Mark copy with the proprietary name and model number of products, materials, and equipment furnished, including substitutions and product options selected.
(c) Note related Change Orders, As-Built Drawings**,** and Product Data, where applicable.

4. Record Product Data: Submit one copy of each Product Data submittal. Mark one set to indicate the actual product installation where installation varies substantially from that indicated in Product Data.

(a) Give particular attention to information on concealed products and installations that cannot be readily identified and recorded later.
(b) Include significant changes in the product delivered to Project site and changes in manufacturer's written instructions for installation.

(c) Note related Change Orders, As-Built Drawings**,** and Record Specifications, where applicable.

1.01 WARRANTIES

A. Submittal Time: Submit written warranties on request of the Landscape Architect for designated portions of the Work where commencement of warranties other than date of Substantial Completion is indicated.

1. Organize warranty documents into an orderly sequence based on the table of contents of the Project Manual.

(a) Bind warranties and bonds in heavy-duty, 3-ring, vinyl-covered, loose-leaf binders, thickness as necessary to accommodate contents, and sized to receive 8-1/2-by-11-inch paper.
(b) Provide heavy paper dividers with plastic-covered tabs for each separate warranty. Mark tab to identify the product or installation. Provide a typed description of the product or installation, including the name of the product and the name, address, and telephone number of Installer.
(c) Identify each binder on the front and spine with the typed or printed title "WARRANTIES," Project name, and name of Contractor.

2. Provide additional copies of each warranty to include in operation and maintenance manuals. At Substantial Completion of the project, the Contractor shall deliver to the Landscape Architect copies of all warranties for the various materials and pieces of equipment included in the project. These warranties shall be submitted in duplicate and shall be bound together with the operating and maintenance data called for above.

1.02 OPERATION AND MAINTENANCE MANUALS

A. Assemble a complete set of operation and maintenance data indicating the operation and maintenance of each system, subsystem, and piece of equipment not part of a system. Include operation and maintenance data required in individual Specification Sections and as follows:

1. Operation Data:

(a) Emergency instructions and procedures.
(b) System, subsystem, and equipment descriptions, including operating standards.
(c) Operating procedures, including startup, shutdown, seasonal, and weekend operations.
(d) Description of controls and sequence of operations.
(e) Piping diagrams.

2. Maintenance Data:

(a) Manufacturer's information, including list of spare parts.
(b) Name, address, and telephone number of Installer or supplier.
(c) Maintenance procedures.
(d) Maintenance and service schedules for preventive and routine maintenance.
(e) Maintenance record forms.
(f) Sources of spare parts and maintenance materials.
(g) Copies of maintenance service agreements.
(h) Copies of warranties and bonds.

B. Organize operation and maintenance manuals into suitable sets of manageable size. Bind and index data in heavy-duty, 3-ring, vinyl-covered, loose-leaf binders, in thickness necessary to accommodate contents, with pocket inside the covers to receive folded oversized sheets. Identify each binder on front and spine with the printed title "OPERATION AND MAINTENANCE MANUAL," Project name, and subject matter of contents.

1.03 FINAL COMPLETION

A. Related Requirements: The Contractor’s attention is directed to the General and Supplementary Conditions of the Contract and M.G.L. Chapter 30, Section 39G covering closeout and final payment procedures.

B. Final Completion:

1. Within fifteen (15) days of the effective declaration of Substantial Completion, the Landscape Architect will send the Contractor by certified mail, return receipt requested, a complete final punch list of all incomplete or unsatisfactory work items necessary to achieve Final Completion.

(a) If the Contractor fails to complete such work within forty-five (45) days after receipt of the list, or by the contractual completion date, whichever is later, the awarding authority may, subsequent to seven (7) days written notice to the Contractor, terminate the Contract and complete the incomplete or unsatisfactory work items and charge the cost of same to the Contractor.

2. The Contractor shall notify the Landscape Architect when the work is completed. The Landscape Architect will promptly make an inspection, and in no case later than thirty (30) days after notification by the Contractor that the work is complete, send the Contractor a final estimate for the Contract balance due, holding back any amount estimated to cover work which is still incomplete or unsatisfactory.

3. Upon completion of all remaining items, and after receipt of all appropriate Record Specifications, Record Product Data, Operating and Maintenance Manuals, Warranties, Guarantees and any Spare Parts as required by the

Contract Documents, the Contractor shall provide a notarized Contractor's Certificate and Release and a final Application for Payment to the Owner to complete the close-out process.

END OF SECTION

Division 2

SECTION 02100

SITE PREPARATION AND DEMOLITION

PART 1 - GENERAL

1.01 GENERAL PROVISIONS

A. All of the Contract Documents, including the Contract Form, General Provisions, General Conditions, Supplemental Conditions, and all Attachments to the General Provisions, and Division 1 - General Requirements, apply to the work of this Section.

B. Contact Dig-Safe (811) seventy-two hours prior to the start of any removals or excavation work, and obtain a Certificate verifying that marking the location of utilities has been completed. Contact the City of Waltham Engineer to verify the location of additional on-site utilities. Coordinate demolition work with utility companies. Dig-safe does not locate telephone and cable lines; contact the specific utilities involved for this information.

C. Notify the Landscape Architect one week prior to removing trees scheduled to be demolished to schedule a site visit by the City of Waltham Tree Warden to inspect trees prior to removal.

1.02 SCOPE OF WORK

A. Provide all equipment and do all work necessary to prepare the site complete, as indicated on the Drawings and as specified.

B. The work shall include, but is not limited to, the following:

1. Marking the location of utilities within the Limit of Work Line.
2. Demolition of items indicated on the Drawings.
3. Removal of incidental site items not indicated on the site plan which will impede proposed construction.
4. Protection of existing site elements to remain
5. Provision of a 6’ height temporary chain link fence enclosing the site during construction.

1.03 RELATED WORK

A. Section 01050 - Field Engineering: Layout of site improvements.
B. Section 01500 - Temporary Facilities and Controls.
C. Section 02150 – Existing Trees to Remain
D. Section 02200 - Earthwork.

1.04 SUBMITTALS

A. Copies of required permits.

B. Provide certificate verifying marking of utilities thru Dig-safe.

C. Submit shop drawing or description of temporary signs including text, for approval by the Landscape Architect, prior to their installation.

1.05 REFERENCES

A. All work shall comply with the minimum standards of the latest editions of the following codes and specifications, subject to modifications and amendments outlined herein.

1. MHD: "Standard Specifications for Highways and Bridges", Department of Public Works, Commonwealth of Massachusetts, latest edition.
2. Federal, State and/or Municipal Codes.
3. Public Safety Codes.
4. U.S. Public Health Service.
5. National Electric Manufacturers Association.
6. American National Standards Institute.
7. American Society of Mechanical Engineers.
8. Commercial Standards.
9. Federal Specifications.
10. Occupational Safety and Health Regulations.
11. Americans with Disabilities Act Guidelines (ADAAG) for Building and Facilities, 36 CFR Part 1191.
12. MAAB CMR 521 Regulations.
13. National Arborist Association Standards, National Arborist Association, 124 Route 101, Bedford, NH 03102.
14. OSHA Construction Regulations Title 29 CFR Part 1926.

1.06 EXAMINATION OF SITE AND DOCUMENTS

A. The Contractor shall inform him/herself of existing conditions of the site before submitting his/her bid. No claim for extra compensation or extension of contract time will be allowed on account of conditions which are apparent from a thorough visual examination of the site.

1.07 MAINTENANCE OF ACCESS ON SIDEWALKS AND ROADS

A. The Contractor shall not close or obstruct any portion of street or sidewalk without obtaining permits therefor from the proper municipal authorities. Streets and sidewalks shall be maintained passable by the Contractor at his own expense, and the Contractor shall assume full responsibility for the adequacy and safety of provisions made. He shall conduct construction operations such that interference with the flow of vehicular and pedestrian traffic is held to a minimum.

B. The Contractor shall coordinate with the City Fire and Police at all times. The Contractor shall notify the Waltham Fire Department and Waltham Police Department when any street or any portion of the traveled way is to be closed regardless of the length of time or day. No street shall be closed without the approval of the Consolidated Public Works

Department of the City of Waltham.

C. Keep all adjacent streets and sidewalks swept clean at all times. Cleanup operations not performed in a timely manner will be performed by the City of Waltham and back-charged to the Contractor.

1.08 PERMITS AND CODES

A. All work shall be as shown in the Contract Drawings and Specifications and shall comply with applicable codes and regulations at the local, county, state, and federal levels. All labor, materials, equipment and services necessary to make the Work comply with such requirements shall be provided without additional cost to the Owner.

B. The Contractor, under this Section, shall be responsible for providing and filing all Plans, Specifications and other documents, pay all requisite fees and secure all permits, inspections and approvals necessary for legal installation and operation of the systems and or equipment finished under this Section.

1.09 TRAFFIC POLICE

A. Traffic police will be required for operations within City streets. Refer to Section 01040 - Control of the Work, Section 1.05 for police requirements.

1.10 CONDITIONS OF WORK

A. The Work of this Project is subject to an Order of Conditions issued by the Waltham Conservation Commission, included in the Contract as Appendix A.

B. The Work of this Project is subject to the restrictions of the City of Waltham Noise Ordinance. Refer to Section 01010 - Summary of Work, Section 1.07.

C. Conduct the work giving consideration to protection of the public, protection of the existing work from weather; control of noise, shocks, and vibration; control of dirt and dust; orderly access and storage of materials; protection of existing buildings; protection of adjacent buildings and property. Coordinate work and cooperate with the Owner and Landscape Architect at all times.

D. Schedule site preparation and removal work in connection with the progress schedule required by the General Conditions.

E. The Site Preparation / Demolition Plan endeavors to describe the scope and intent of Work. No guarantee is expressed or implied that the Site Preparation and Demolition Plan describes the full extent of objects to be removed in order to facilitate construction. Site Preparation operations not specifically identified on the Contract Drawings shall be considered as part of the basic lump sum contract and do not qualify as extra work.

F. All other work requiring removal, such as fence, tree roots and former buried footings shall be removed and discarded as required for proper construction of new work without additional cost to the Owner.

G. No extra demolition shall be performed without first notifying and obtaining written approval of the Landscape Architect.

1.12 DRAINAGE AND EROSION CONTROL

A. Upon entry to the site, the Contractor shall assume responsibility for site and subsurface drainage. During the Contract period the Contractor shall maintain drainage in a manner satisfactory to the Landscape Architect. At all times, the adjacent areas shall be protected and maintained in their existing conditions.

B. It shall be the responsibility of the Contractor to render the site erosion-free, at all times during the Contract period. The Contractor shall take special precautions to prevent erosion run-off from slopes, drainage trenches, granular bases, structures, and other improvements. Unless otherwise indicated on the Drawings, hay bales, jute mesh, catch basin insert filtration bags, and siltation fabrics shall be used, as determined by the Landscape Architect.

1.13 DELIVERY, STORAGE AND HANDLING

A. Materials shall be stored in a dry location, off the ground and in such manner as to prevent damage, intrusion of foreign matter and weather. All materials which have become damaged or otherwise unfit for use during delivery or storage shall be replaced at the expense of the Contractor.

PART 2 - PRODUCTS

2.01 LAYOUT AND STAKING

A. Refer to Section 01050 - Field Engineering for layout and staking requirements.

2.02 DUST CONTROL

A. The Contractor shall provide a source of water for dust control either a water truck on-site or permitted connection to City fire hydrant throughout the period of construction.

B. Water for dust control shall be free from contaminants hazardous to human health and plant growth. No calcium chloride may be used.

PART 3 - EXECUTION

3.01 LOCATING UTILITIES & SITE ITEMS AFFECTING THE WORK

A. Prior to site preparation and removals operation, the Contractor shall locate and mark

all site items such as utilities which could be affected by site preparation and removals.

B. Contact Dig-Safe (1-888-344-7233) seventy-two hours prior to the start of any removals or excavation work, and obtain a Certificate verifying that marking the location of utilities has been completed. Contact the City of Waltham Engineering Department to verify the location of additional on-site utilities. Coordinate demolition work with utility companies. Dig-safe does not locate telephone and cable lines; contact the specific utilities involved for this information.

3.02 PROJECT CONDITIONS

A. All apparatus, storage and the operation of work people in connection with activities under this Section shall be confined within the property lines of the park shall not encumber areas outside the site.

B. Thoroughly wet down exposed earth during demolition to prevent the spread of dust. Avoid flooding or contaminated run-off.

1. Continue dust control operation as necessary and as directed by the Landscape Architect throughout the construction period until all disturbed areas have been permanently stabilized.

C. All existing items to remain which are damaged by the Contractor will be repaired or replaced at the Contractor's expense. Replacement or repaired items shall be equal to new items as specified.

D. The Contractor shall be responsible for the methods used in this work including properly protecting against damage to existing and proposed site improvements, structures, site features, utility lines, trees, lawns, etc. Check with municipality and local utility companies for locations of existing utilities which may be in use or abandoned. Investigate and ascertain that underground utilities are correctly located and that they have been shut off and/or abandoned before disturbing them.

3.03 PROTECTION

A. The Contractor shall assume complete responsibility and liability for the safety and structural integrity of all work and utilities to remain during the performance of all work.

B. The Contractor shall provide safeguards including, but not limited to, warning signs, barricades, temporary construction fences, warning lights and other items required for protection of personnel and the general public during the performance of all work.

C. The Contractor shall provide barricades for substantial construction in accordance with safety regulations of authorities having jurisdiction and insurance requirements.

D. All features related to protection shall be maintained until that unit of work has been completed to the point that the danger no longer exists.

3.04 CLEARING AND GRUBBING

A. Remove obstructions, trees, shrubs, grass, and other vegetation to permit installation of new construction, and in areas indicated on the Drawings.

B. Tree stumps shall be removed in their entirety including tap roots where applicable.

C. Fill depressions caused by clearing and grubbing operations with satisfactory soil material, unless further excavation or earthwork is indicated.

3.05 PAVING

A. The line between existing pavement to be removed and existing pavement to remain shall be cut neatly saw-cut through full depth of pavement section so as to leave a smooth, straight and vertical edge. Cut to the dimensions given or directed. Remove the portion behind the cut with proper tools.

1. Existing pavement which is damaged, disturbed or settled by construction operations shall be cut back by the same method and replaced as directed by the Landscape architect at no additional cost to the Owner.

3.06 LAWN AND FIELD AREAS

A. Strip lawn areas and stockpile topsoil for re-use. At the end of construction, remove and legally dispose of off-site, any excess quantity of topsoil or earth.

3.07 FOOTINGS & MISCELLANEOUS SITE ITEMS

A. Footings & miscellaneous site items shall be removed in their entirety and legally disposed of. Holes resulting from demolition shall be backfilled and compacted in accordance with Section 02200 Earthwork.

3.08 CLEANUP

A. Keep work areas free from accumulation of debris during the work under this Section and leave the premises in a clean condition after completion of the Work of this Section.

B. At the completion of the work of this Section, properly and legally dispose of all items removed and not scheduled to remain, including surplus soil material, unsuitable topsoil, demolished materials, and waste materials including trash and debris, and any other waste materials in connection with the work under this Section and leave the premises in a clean condition.

END OF SECTION

SECTION 02150

EXISTING TREES TO REMAIN

PART 1 - GENERAL

1.01 GENERAL PROVISIONS

A. All of the Contract Documents, including the Contract Form, General Provisions, General Conditions, Supplemental Conditions, and all Attachments to the General Provisions, and Division 1 - General Requirements, apply to the work of this Section.

B. This Section specifies requirements for maintaining existing trees, before, during and after construction.

1. The Contractor's attention is directed to the protection of all existing trees within the project area.

2. No construction activity shall occur on-site before tree protective fencing has been installed.

3. No pruning or removal of tree limbs shall be allowed to provide clearance for construction work unless approved by the City of Waltham Tree Warden.

1.02 REFERENCE STANDARDS

A. National Arborist Association Pruning Standards for Shades Trees (1988 Revision)

1.03 QUALITY ASSURANCE

A. Work under this Section is subject to inspection by the City of Waltham Tree Warden and shall be done to his satisfaction.

B. Pruning and aeration of trees shall be done by or under the direct supervision of a Massachusetts Registered Arborist.

C. Notify the Landscape Architect at least one week before trees are scheduled for pruning.

PART 2 – PRODUCTS

2.01 TREE PROTECTION FENCE

A. Trees shall be protected by temporary moveable 6' height chain link fence, dimensioned as shown on the Drawings.

B. Cover area within tree enclosure with 3" depth of mulch.

C. Tree protection fence is minimal area required to protect trunk and branches and does not define the full extent of tree canopy. No materials shall be stockpiled or vehicles parked or driven within the tree canopy, unless it is necessary to install site improvements in that area. This area is delineated on the Drawings.

2.02 ACTIVITES WHICH ARE PROHIBITED WITHIN THE TREE CANOPY (DRIP-LINE)

A. Parking or driving of equipment, machinery, and stockpiling of materials.

B. Dumping of any liquid waste such as paint thinner from cleaning brushes, wash-out materials from cleaning equipment, or debris of any kind.

PART 3 – EXECUTION

3.01 GRADING OPERATIONS AT EXISTING TREES TO REMAIN

A. Where grading work is required within the drip-line or canopy of existing trees to remain:

1. Notify the Landscape Architect prior to excavating in these areas.

2. Deep water tree to a depth of 12” one week prior to grading operations, and immediately after grading operations are complete.

B. When excavating or trenching with the drip-line, hand dig in a manner which will cause minimum damage to roots systems.

C. Cut roots cleanly and to a depth 3” below finished grade. Do not cut tree roots over 2 inches in diameter unless approved by the Landscape Architect or Tree Warden.

D. Prune injured roots clean and backfill as soon as possible.

3.02 WATERING OF EXISTING TREES TO REMAIN DISTURBED BY CONSTRUCTION

A. All existing trees whose canopy has been disturbed by construction, by grading and/or installation of paving or walls, shall be watered throughout the construction period.

1. The Contractor shall maintain at the site at all times a watering truck or permitted connection to a fire hydrant for the purpose of tree watering through the months of June through September and additional periods as determined by the Landscape Architect.

2. Watering of trees disturbed by construction shall consist of deep watering (12”-24” depth) monthly, and additionally as directed by the Landscape Architect or Tree Warden.

3.03 PRUNING EXISTING TREES TO REMAIN

A. All existing trees shall be pruned after substantial completion of construction.

B. Pruning shall be done by or under the direct supervision of a registered Arborist.

C. Removal of limbs which are 6” in diameter or greater is prohibited without consent of the City Tree Warden.

D. Pruning shall be done to the satisfaction of the City of Waltham Tree Warden and shall consist of the following for each tree:

1. Corrective Pruning/Crown Cleaning/Fine Pruning

a. Removal of dead, dying, diseased, decaying, interfering, objectionable, obstructing and weak branches. An occasional undesirable branch up to one-half inch in diameter may remain within the main leaf area to its full length when it is not practicable to remove it.

2. Crown Raising: Remove limbs of any tree within 5’ of sidewalks or walks to a height of 80” above finished grade.

END OF SECTION

SECTION 02200

EARTHWORK

PART 1 - GENERAL

1.01 GENERAL PROVISIONS

A. All of the Contract Documents, including the Contract Form, General Provisions, General Conditions, Supplemental Conditions, and all Attachments to the General Provisions, and Division 1 - General Requirements, apply to the work of this Section.

B. Contact Dig-Safe (811) seventy-two hours prior to the start of any removals or excavation work, and obtain a Certificate verifying that marking the location of utilities has been completed. Contact the City of Waltham Engineer to verify the location of additional on-site utilities. Coordinate earthwork with utility companies.

1.02 SCOPE OF WORK

A. Work under this Section shall include all labor, materials, services, equipment, transportation and accessories and the performance of all operations necessary to complete the work of this Section, as indicated on the Contract Drawings and as specified herein.

B. The work shall include, but is not limited to, the following:

1. Furnishing and installing base courses for paving
2. Miscellaneous fill for footings and slabs.
3. Site grading. For grading within the dripline of existing trees to remain, refer to Section 02150 – Existing Trees to Remain.
4. Final grading of fields & lawn areas with laser-controlled equipment

1.03 RELATED WORK

A. Section 02100 - Site Preparation & Demolition
B. Section 02150 – Existing Trees to Remain
C. Section 02510 - Bituminous Concrete Paving
D. Section 02515 – Unit Pavers
E. Section 02540 - Safety Surfacing
F. Section 02800 - Site Furnishings
G. Section 02950 - Planting

1.04 REFERENCES

A. All work shall comply with the minimum standards of the latest editions of the following codes and specifications, subject to modifications and amendments outlined herein.

1. MHD: “Standard Specifications for Highways and Bridges”, Department of Public Works, Commonwealth of Massachusetts, Latest Edition.
2. ASTM: American Society of Testing Materials.
3. AASHTO: American Association of State Highway and Transportation Officials.
4. ANSINFPA: American National Standards Institute, National Fire Protection Act.
5. Federal, State and/or Municipal Codes.
6. Public Safety Codes.
7. U.S. Public Health Service.
8. National Electric Manufacturers Association.
9. Commercial Standards.
10. Occupational Safety and Health Regulations.
11. OSHA Construction Regulations Title 29 CFR Part 1926.

1.05 EXAMINATION OF SITE AND DOCUMENTS

A. By submitting a bid the Contractor affirms that he/she has carefully examined the site and conditions affecting Work under this Section. No claim for additional costs will be allowed because of lack of full knowledge of existing conditions which can be reasonably inferred from visual inspection of the site.

1.06 SUBMITTALS

A. Submit to the Landscape Architect:

1. A representative sample of approximately 5 pounds for each type of fill material.

2. Supplier's or laboratory sieve analysis for each type of fill material demonstrating compliance with the Specifications.

3. Manufacturer's requirements for graduation of the crushed stone base course for safety surfacing, listing the sieve graduations required.

4. Name of soils testing laboratory for compaction tests.

5. Results of the Modified Proctor laboratory test for crushed stone base course subgrade fill under safety surfacing.

6. Results of field compaction tests for safety surfacing base course and subgrade.

1.07 COMPACTION TESTING

A. The Contractor shall pay for an independent laboratory, subject to the approval of the Landscape Architect, to provide testing of compaction as follows:

1. Maximum density and optimum water content determination by the ASTM D-1557-09 or AASHTO T-180 Modified Proctor laboratory test for “Suitable Backfill” for the subgrade,and crushed stone base for safety

surfacing.

2. On-site: Provide one field density test of the subgrade, and one field density test of in each compacted layer of stone basecourse layer, in 2 separate locations within playground area. Locations shall be chosen by the Landscape Architect.

1.08 PERMITS AND CODES

A. All work shall be as shown in the Contract Drawings and Specifications and shall comply with applicable codes and regulations at the local, county, state, and federal levels. All labor, materials, equipment and services necessary to make the Work comply with such requirements shall be provided without additional cost to the Owner.

1. OSHA Construction Regulations Title 29 CFR Part 1926.

B. The Contractor, under this Section, shall be responsible for providing and filing all Plans, Specifications and other documents, pay all requisite fees and secure all permits, inspections and approvals necessary for legal installation and operation of the systems and or equipment furnished under this Section.

C. The Contractor shall include in his/her bid any charges by the Water Department, Utility Company, or other authorities for work done by them and charged to the Contractor.

1.09 CONDITIONS OF WORK

A. Conduct the work giving consideration to protection of the public, protection of the existing work from weather; control of noise, shocks, and vibration; control of dirt and dust; orderly access and storage of materials; protection of existing buildings; protection of adjacent buildings and property. Coordinate work and cooperate with the Owner and Landscape Architect at all times.

B. Schedule earthwork in connection with the progress schedule required by the General Conditions.

1.10 DISPOSITION OF EXISTING UTILITIES

A. Site information: No representations are made indicating subsurface conditions. It is expressly understood that the Owner/Landscape Architect will not be responsible for interpretations or conclusions drawn therefrom by the Contractor.

B. Existing Utilities

1. Before starting earthwork, locate existing underground utilities in areas of work. If utilities are to remain in place, provide adequate means of support and protection during earthwork operations.

2. Should uncharted, or incorrectly charted, piping or other utilities be

encountered during excavation, notify the Landscape Architect and Owner, and consult utility Owner immediately for directions. Cooperate with Owner and utility companies in keeping respective services and facilities in operation. Repair damaged utilities to satisfaction of utility Owner.

3. Do not interrupt existing utilities serving facilities occupied or used by Owner and others, during occupied hours, except when permitted in writing by Owner and then only after acceptable temporary utility services have been provided. Provide minimum of 48 hour notice to Owner, and receive written notice to proceed before interrupting any utility.

4. Inactive utilities encountered or utilities abandoned during construction operations shall be removed, plugged or capped. The location of such utilities shall be noted on Record Drawings and reported in writing to the Landscape Architect.

1.11 DEFINITIONS

A. Fill and backfill shall be, for the purpose of this Specification, considered interchangeable terms and shall mean material to be used to bring existing or construction grades up to finish subgrade levels.

B. The words “finish grade” as used herein mean the required final grade elevations indicated on the Contract Drawings. Where not otherwise directed, areas outside buildings shall be given uniform slopes between points for which finish grades are shown, or between such point and existing grade, except that vertical curves or roundings shall be provided at abrupt changes in slope.

C. The word “subgrade” as used herein, means the required surface of subsoil, borrow fill or compacted fill.

D. “Trench shall be defined as an excavation of any length where the width is less than twice the depth. All other excavations shall be classified as open.

E. "Unsuitable Materials” shall include the following:

1. Pavements, utility structures, building foundations and other manmade structures.

2. Peat, muck, organic silt and other organic materials subject to decomposition, consolidation or decay.

3. Miscellaneous fill including cinders, ash, glass, wood, masonry and metal.

4. Ledge and boulders except as specified herein for fills.

PART 2 - PRODUCTS

2.01 SOIL MATERIALS

A. Ordinary Borrow

1. Ordinary Borrow shall be used whenever fill or backfill is indicated on the Drawings, and to fill to achieve required subgrades.

2. Ordinary Borrow shall conform to Ordinary Borrow as defined by the Massachusetts Standard Specifications for Highways and Bridges, M1.01.0.

   a. This material shall have the physical characteristics of soils designated as group A-1, A-2-4 or A-3 under AASHTO-M145.

   b. Ordinary fill shall be a natural soil, well-graded and free from all organic weak, compressible, and frozen materials, and shall contain no stone larger than two (2) inches in maximum dimension. It shall be of such nature and character that it can be dried and compacted and shall be free of all expansive materials (such as high plastic clays) and of materials subject to decay, decomposition, or dissolution, and shall conform to the following gradations:

U.S. Sieve No.	% Passing by Weight
2 inch	100%
#4	20-75%
#40	0-25%
#200	0-5%

3. Material from excavation on the site meeting the above requirements as evidenced by testing may be used as “Suitable backfill” provided it has not been contaminated with unsuitable material.

B. Dense grade leveling course under bituminous concrete paving shall conform to "Dense Grade Leveling Course" M2.01.7 of the Mass Standard Specifications for Highways and Bridges with the following gradation:

Sieve Designation	Percent Passing
2 inch	100
1-½ inch	70-100
3/4 inch	50-85
No. 4	30-55
No. 50	8-24
No. 200	3-10

C. Aggregate Base Course, Aggregate Backfill & Gravel:

1. Where Aggregate Base Course, Aggregate Backfill or Gravel is indicated on the Drawings, this material shall conform to the requirements of M1.03.0 Gravel Borrow, Type C of the MHD Standard Specifications except that the largest

stone dimension shall be one and one-half (1-1/2) inch. Gravel shall consist of inert material which is hard durable stone and coarse sand; free from loam, clay, organic material, surface coatings, trash, frozen materials and deleterious materials. Gradation requirements are as follows:

Sieve Designation	Percent Passing
1 inch	100
½ inch	50-85
No. 4	30-60
No. 50	8-28
No. 200	0-10

D. Where dense-graded crushed stone is indicated on the Drawings, this material shall conform to the requirements for Dense-Graded Crushed Stone for Subbase, M2.01.7 of the MHD Standard Specifications, with the following gradation:

E. Crushed stone for safety surface base shall be a homogenous mixture of the following graduation, with exact graduation adjusted to the specific written requirements of the surfacing manufacturer. Stone shall be uniformly mixed in a pug mill or mixing table or other mechanical means prior to placement and sieve analysis.

1. Base course for interlocking recycled plastic pavers shall be equivalent to that used for rubber safety surfacing.

Sieve Designation	Percent Passing
1 inch	90-100
5/8 inch	50-80
1/4 inch	30-50
No. 4	15-35
No. 8	10-30
No. 30	3-5
No. 200	0-3

F. Crushed Stone for all other uses shall conform to the requirements of M2.01.0 Crushed Stone of the MHD Standard Specifications, sized as indicated on the Drawings, with gradation for size as required by the Standard Specifications.

PART 3 - EXECUTION

3.01 LAYOUT

A. Layout site improvements as required in Section 01050 - Field Engineering.

B. The Contractor shall inform the Landscape Architect when the general layout is

completed and shall not begin excavation until the various alignments are approved by the Landscape Architect. Any discrepancies encountered in field conditions shall be reported to the Landscape Architect immediately.

C. The Contractor shall be responsible for maintaining the correct vertical and horizontal alignment of all elements, which responsibility shall not be waived by the Landscape Architect's approval of basic layout and stakeout.

3.02 PROTECTION

A. The Contractor shall assume complete responsibility and liability for the safety and structural integrity of all work and utilities to remain during the performance of all work.

B. The Contractor shall provide safeguards including, but not limited to, warning signs, barricades, temporary construction fences, warning lights and other items required for protection of personnel and the general public during the performance of all work.

C. The Contractor shall provide barricades for substantial construction in accordance with safety regulations of authorities having jurisdiction and or insurance requirements.

D. All features related to protection shall be maintained until that unit of work has been completed to the point that the danger no longer exists as approved by the Landscape Architect.

3.03 GRADING WITHIN THE DRIPLINE OF EXISTING TREES TO REMAIN

A. Refer to Section 02150 Existing Trees to Remain for notification and procedural requirements.

3.04 EXCAVATION

A. Excavation is "Unclassified", and shall include excavation to subgrade elevations indicated on the Drawings, or required to accommodate new construction, regardless of the character of materials and obstructions encountered and shall be understood to include rock and boulders, shale, boulders, earth, hardpan, fill, foundations, pavements, curbs, piping and debris, except as follows:

1. Notify the Landscape Architect prior to proceeding if materials greater than 1 cubic yard in size are encountered.

2. Excavation of rock, stone, ledge, parts of stone, brick or cement concrete slabs greater in size than 1 cubic yard and which cannot be excavated without the use of hydraulic rippers, hammering or breaking, the size of which could not be determined from surface inspection, will be paid for at the Contract Unit Price per cubic yard for Rock Excavation due to unanticipated subsurface conditions, or adjustment may be made to the layout to avoid excavation of same.

B. Unauthorized Excavation: When suitable bearing material is encountered at subgrade

elevations shown and excavation is made to greater depth, bring grade back to elevation required by providing appropriate fill material at no additional cost.

C. When excavation has reached required subgrade elevations, notify the Landscape Architect.

D. If the "assumed" bearing materials are not encountered at the subgrade elevations indicated, additional excavation work may be authorized by the Owner. Do not perform additional excavation unless directed by the Landscape Architect in writing. Removal of unsuitable material and its replacement with proper backfill, if directed in writing by the Landscape Architect, will be paid for as an adjustment of the Contract price due to unanticipated subsurface conditions.

E. During excavation, do not damage roots of trees which are to remain. When excavating or trenching within the branch spread of trees scheduled to remain, hand dig in a manner which will cause minimum damage to root systems. Do not cut tree roots over 2 inches in diameter. Do not leave surface roots exposed. Prune injured roots clean and backfill as soon as possible to the satisfaction of the Landscape Architect and Owner.

F. Slope sides of excavations to comply with local codes and ordinances having jurisdiction. Shore and brace where sloping is not possible because of space restrictions, stability of material excavated, or depth of excavation.

G. Dewatering: Prevent water and subsurface or ground water from flowing into excavations and from flooding project site and surrounding area. Under no circumstances lay pipe or install appurtenances in water. Keep all trenches free from water until they have been backfilled.

H. Materials Storage: Stockpile satisfactory excavated materials where directed until required for backfill or fill. The Landscape Architect shall approve the location of all stockpiles prior to placement. Place, grade and shape stockpiles for proper drainage.

1. Locate and retain soil materials away from edge of excavations. Do not store within drip line of trees to remain.

2. Legally dispose of excess soil material and waste materials off-site.

I. Frost Protection

1. Make no excavations to fill depth indicated when freezing temperature may be expected unless intended improvements can be accomplished immediately after the excavations have been completed. Protect bottom so excavated from frost if progress is delayed. Should protection fail, remove frozen materials and replace with gravel as directed at no cost to the Owner.

2. Keep the site clear and free of accumulations of snow within the limit of the Contract lines as necessary to carry out the work of the Contract.

3. Fill materials containing frost shall not be utilized, nor shall filling be done over frozen materials.

3.05 BACKFILL AND FILL

A. Backfill excavations as promptly as work permits, but not until completion of the following:

1. Acceptance of construction below finish grade by Landscape Architect.

2. Inspection, testing, approval and recording locations of underground utilities to the satisfaction of the Landscape Architect.

3. Compaction testing of subgrade if required at that location.

3.06 PLACEMENT OF FILL

A. Placement: Place backfill and fill materials in uniform lifts of not more than 12 inches in loose depth for ordinary fill, 8 inches in loose depth for other materials compacted by heavy compaction equipment, not more than 6 inches in loose depth for material compacted by hand operated tampers, except that **compaction of base for safety surface shall be done in two (2) inch lifts, and for interlocking pavers shall be done in one (1) inch lifts.**

1. Coordinate backfilling with the installation of the work of all trades.

2. Before compaction, moisten or aerate each layer as necessary to provide optimum moisture content. Compact each layer to required percentage of maximum dry density or relative dry density for each area classification. Do not place backfill or fill material on surfaces that are muddy, frozen, or contain frost or ice.

3. Place backfill and fill materials evenly adjacent to structures, piping or conduit to required elevations. Take care to prevent wedging action of backfill against structures or displacement of piping or conduit by carrying material uniformly around structure, piping or conduit to approximately the same elevation in each lift.

4. Backfill by hand around pipe and for a depth of one (1) foot above the pipe. Use earth without rock fragments or large stones and tamp firmly in layers not exceeding 6 inches in thickness, taking care not to disturb the pipe. Compact the remainder of the backfill thoroughly with a rammer of suitable weight or with an approved mechanical tamper, or if the soil is granular, by flooding, provided that under pavements, walks and other surfacing, the backfill shall be tamped solidly in layers not exceeding 6 inches in thickness.

5. Compact backfill to match adjacent areas as specified above. Correct settlement of fill by filling to subgrade levels in all areas where settlement

occurs.

3.07 COMPACTION

A. Refer to Paragraph 1.07 this Section, for Compaction Testing Requirements for subgrade and crushed stone base of playground area.

B. Compact soil to not less than the following percentages of maximum density of soils in accordance with ASTM D1557, Method C or AASHTO T-180.

1. Subgrade and base courses under all areas (with the exception of planting beds), utility trench backfill, fill at base and around footings, and curb subgrade: Compact each layer of backfill or fill material to 95 percent of maximum dry density.

2. Planting beds: Compact to 85 percent of maximum dry density.

C. Moisture Control: Where subgrade or layer of soil material must be moisture conditioned before compaction, uniformly apply water to surface of subgrade or layer of soil material, to prevent free water from appearing on surface during or subsequent to compaction operations. Remove and replace soil material that is too wet to permit compaction to specified density.

3.08 SUBGRADE PREPARATION AND GRAVEL PLACEMENT FOR PAVEMENTS

A. Clean the rough subgrade of all loose, soft, foreign or other unsuitable material and reshape as required. Add suitable fill material to meet required grade.

B. Compact to required grades and sections for paving. Tamp traces of trenches. Remove spongy or otherwise unsuitable material and replace with approved material. Loosen exceptionally hard spots and re-compact. Take every precaution to obtain a foundation of uniform bearing power. In absence of specific requirement, compact foundation by such means as will provide firm base and insurance against settlement of superimposed work.

C. Roll longitudinally at sides, overlapping each pass by one-half of rear wheel. Fill all depressions or settlements which occur. Continue until all stones are firmly interlocked and surface is true and unyielding. After final rolling, surface is to be free of depressions or irregularities greater than 3/8 inch in ten (10) feet.

D. Construct base course as detailed on the Contract Drawings for all areas of new paved surfaces in this Section. Placement of gravel base course shall conform to the requirements of MHD except as herein modified.

E. Spread gravel from self-spreading vehicles, approved type of power grader or by hand upon prepared sub-grade. Spread evenly in layers so as to avoid separation of aggregates. Layers shall not exceed six (6) inches in depth after compaction. Remove stones larger than four (4) inches. When spread and rolled on the prepared surface, it

shall form a stable surface. Compaction shall have a density of not less than 95% of maximum density determined in accordance with ASSHTO-T-180 Method D. All rolling shall be done with a roller weighing 8 to 10 tons. Compact any portion which is not accessible to a roller by mechanical or hand tamper.

F. Final rolled surface shall be true to the lines and grades indicated on the Contact Drawings or as directed by the Landscape Architect. Fill any depression that may appear during and after rolling with gravel and re-roll until the surface is true and even. Tolerance shall be 3/8 inch maximum above or below the cross-section grades and 3/8 inch maximum under a 10 foot line longitudinally except that:

1. Tolerance for grades of crushed stone base course shall be as required by the safety surface installer/manufacturer.

G. Maintain the surface of any layer in its finished condition until succeeding layer is placed. Properly drain the sub-base at all times.

3.09 GRADING

A. The Contact Drawings indicate, in general, alignment and finish grade elevations. The Landscape Architect, however, may make such adjustments in grades and alignments as are found necessary in order to avoid interference with any special conditions encountered.

B. Uniformly grade areas within limits of grading under this section, including adjacent transition areas. Smooth finished surface within specified tolerances, compact with uniform levels or slopes between points where elevations are indicated, or between such points and existing grades.

1. Final finish grading of large lawn and field areas shall be with laser-guided equipment to achieve

C. Grade areas to drain away from structures and to prevent ponding. Finish surfaces free from irregular surface changes, and as follows:

1. Paved areas: Shape surface of areas under paved surfaces to line, grade and cross section to provide finished grades of pavements within tolerances specified.

D. Compaction: After grading, compact subgrade surfaces to the depth and indicated percentage of maximum or relative density for each area classification.

E. Complete grading operations after utilities have been installed, site improvements included under this Contract have been completed and all rubbish, materials and debris have been properly disposed of.

F. Do all cutting, filling, reshaping, re-grading and re-compacting as necessary to meet the requirements of the Contract Drawings and this Section of the specifications. Maintain

sub-grades at the levels specified until turned over to subsequent construction. Bring to required sub-grade levels any areas where settlement, erosion or other grade changes occur.

3.010 PROTECTION AND REPAIR

A. Protect newly graded areas from traffic and erosion. Keep free of trash and debris.

B. Where completed compacted areas are disturbed by subsequent construction operations or adverse weather, scarify surface, reshape and compact to required density prior to further construction.

C. Whenever streets, lawns, sidewalks or improvements outside the Contract Limit of Work Line have been excavated in fulfilling the work required under this Contract, the Contractor shall furnish and install all material necessary to bring finish surfaces level with the existing conditions in accordance with the governing authority. Notify the proper authorities prior to restoring surfaces outside the Contract Limit of Work.

D. Do all repairs and restoration to pavements, curbs, and other work inside and outside of the project site damaged by the work under this Contract and restore all existing work to a condition at least equal to the condition specified for this Contract for such improvements.

3.10 CLEANUP

A. Keep all work areas free from accumulation of debris during the course of work under this Section.

B. At the completion of the Work of this Section, properly and legally dispose of all excavated materials, all rubbish, debris, waste materials from, and about the site, building, and structures, including tools, scaffolds, apparatus and appliances used in connection with work under this Section and leave the premises in a clean condition.

END OF SECTION

SECTION 02500

GRANITE CURB

PART 1- GENERAL

1.01 GENERAL PROVISIONS

A. All of the Contract Documents, including the Contract Form, General Provisions, General Conditions, Supplemental Conditions, and all Attachments to the General Provisions, and Division 1 - General Requirements, apply to the work of this Section.

1.02 SCOPE OF WORK

A. The work under this section consists of furnishing all material, labor, tools, equipment, and supervision necessary to install radius, straight and transition granite curb.

1.03 RELATED SECTIONS

A. Section 02200 - Earthwork.
B. Section 02510 - Bituminous Concrete Paving.
C. Section 03300 - Cast-in-Place Concrete.
D. Section 09614 - Detectable Warning Panels

1.04 SUBMITTALS

A. Submit the following in accordance with the requirements of section 01300 - Submittals:

1. Supplier's literature demonstrating compliance with the Specifications.

1.05 DELIVERY, STORAGE AND HANDLING

A. Deliver, store, and handle granite curb to prevent damage.

1.06 REFERENCE STANDARDS

A. All work shall comply with the minimum standards of the latest editions of the following codes and specifications, subject to modifications and amendments outlined herein:

1. Massachusetts Standard Specifications for Highways and Bridges, latest edition.
2. Americans with Disabilities Act Accessibility Guidelines (ADAAG)
3. Massachusetts Architectural Access Board Regulations, CMR 521 (MAAB)

1.07 EXAMINATION OF SITE AND DOCUMENTS

A. The Contractor shall inform him/herself of existing conditions of the site before submitting his/her bid and shall be fully responsible for carrying out all required site work to fully and properly execute the work of the Contract.

PART 2 - PRODUCTS

2.01 Materials shall conform to the Massachusetts Standard Specifications for Highways and Bridges, latest edition, requirements specified in the following subsection of Division III, Materials:

A. New granite curb shall be Type VA-4, conforming to Section M9.04.01.

1. Curbs shall be fabricated such that ends fit together to provide no greater than ½" visible joints.

B. Mortar M4.02.15

C. Gravel M1.03.0, Type C

2.02 Curb at curves shall conform to the requirements of M9.04.1 Curbs and Edging of the Mass Highway Standard Specifications.

A. Curb set on radius of 100 feet or less shall be cut to the required curvature. The ends of all curved stones shall be cut on radial lines.

B. On curves with radii greater than 100 feet but less than 500 feet, curb stones may be 4 feet to not more than 6 feet in length.

PART 3 – EXECUTION

3.01 Excavation of Trench

A. The trench for the curb shall be excavated as detailed on the Drawings.

3.02 Preparing the foundation

A. The foundation for the curb shall consist of gravel spread upon the subgrade and after being thoroughly compacted by tamping, depth as shown on the Drawings.

3.03 Setting Curb

A. Curbing shall be set on additional gravel spread upon the foundation.

B. All spaces under the curb shall be filled with gravel thoroughly compacted so that the curb will be completely supported throughout their length.

C. Concrete fill shall be placed at the front and back of the curb, continuous as detailed on the Drawings.

D. The curb shall be set at the line and grade required as shown on the Plans unless otherwise directed.

E. Neatly mortar joints.

END OF SECTION
GRANITE CURB
02500-2

SECTION 02510

BITUMINOUS CONCRETE PAVING

PART 1 - GENERAL

1.01 GENERAL PROVISIONS

A. Attention is directed to the General Conditions of the Contract, all Divisions of the Specifications and the Contract Drawings, all of which apply to this section.

B. Examine and coordinate all Contract Drawings and other section of the specifications for requirements which affect work of this section whether or not such work is specifically mentioned in this section. Coordinate work with other trades to assure the steady progress of all work under the Contract. The Contractor shall refer to the Contract Documents for all new work and coordinate how it relates to the paving.

1.02 SCOPE OF WORK

A. Work under this Section shall include all labor, materials, services, equipment, transportation and accessories and the performance of all operations necessary to complete the work of this Section, as indicated on the Contract Drawings and/or as specified herein.

B. The work shall include, but is not limited to, the following:

1. Furnish and install bituminous concrete pavement

1.03 RELATED WORK

A. Section 02100 - Site Preparation and Demolition
B. Section 02200 - Earthwork: Aggregate Base Course
C. Section 02800 - Site Furnishings

1.04 REFERENCE STANDARDS

A. Work shall comply with the minimum standards of the latest editions of the following codes and specifications, subject to modifications and amendments outlined herein.

1. MHDSS: Standard Specifications: Commonwealth of Massachusetts, Department of Public Works, Standard Specifications for Highways and Bridges, latest edition.
2. ASTM: American Society for Testing and Materials.
3. AASHTO: American Association of State Highway and Transportation Officials.
4. Federal, State and/or Municipal Codes
5. Public Safety Codes
6. U.S. Public Health Service
7. National Electric Manufacturers Association
8. American National Standards Institute

9. American Society of Mechanical Engineers
10. Commercial Standards
11. Federal Specifications
12. Occupational Safety and Health Regulations
13. ADA: Americans with Disabilities Act

1.05 QUALIFICATIONS

A. Installer: Company specializing in performing the work of this section with documented experience on at least two similar projects.

1.06 EXAMINATION OF SITE AND DOCUMENTS

A. By submitting a bid the Contractor affirms that he/she has carefully examined the site and all conditions affecting Work under this Section. No claim for additional costs will be allowed because of lack of full knowledge of existing conditions.

B. Plans, surveys, measurements and dimensions under which the work is to be performed are believed to be correct, but the Contractor shall have to examine them for him/herself during the bidding period, as no additional compensation will be made for errors or inaccuracies that may be found therein.

1.07 SUBMITTALS

A. The Contractor shall provide the following submittals for approval in conformance with requirements of SECTION 01300, SUBMITTALS. Do not order materials until Landscape Architect's approval of submittals, certifications or test results have been obtained. Delivered materials shall closely match the approved submittals.

1. Submit the bituminous concrete design mix for each application, indicating aggregate sizes and proportions.

2. Submit sample of aggregate topping.

3. Manufacturer's literature for tack coat demonstrating compliance with the specifications.

1.08 PERMITS AND CODES

A. All work shall be as shown in the Contract Drawings and Specifications and shall comply with applicable codes and regulations at the local, county, state, and federal levels. All labor, materials, equipment and services necessary to make the Work comply with such requirements shall be provided without additional cost to the Owner.

B. The Contractor, under this Section, shall be responsible for providing and filing all Plans, Specifications and other documents, pay all requisite fees and secure all permits, inspections and approvals necessary for legal installation and operation of the systems and or equipment finished under this Section.

1.09 CONDITIONS OF WORK

A. Conduct the work giving consideration to protection of the public, protection of the existing work from weather; control of noise, shocks, and vibration; control of dirt and dust; orderly access and storage of materials; protection of existing buildings; protection of adjacent buildings and property. Coordinate work and cooperate with the Owner and Landscape Architect at all times.

B. Schedule paving in connection with the progress schedule required by the General Conditions.

PART 2 - PRODUCTS

2.01 BITUMINOUS CONCRETE PAVEMENT

A. Bituminous concrete shall be Class I, Type I-1, furnished and laid in accordance with Section 420 and 490 of the MHD Standard Specifications except as modified herein.

B. Subbase for bituminous concrete shall be Dense-graded Crushed Stone for Subbase as specified in Section 02200 - Earthwork.

1. Subgrade and subbase shall be installed and compacted as required in Section 02200 - Earthwork.

C. Aggregate sizes and gradation for bituminous mixes shall be as follows:

1. Bituminous concrete base course shall conform to MHD Standard Specifications, Section M3, Table A Job Mix Formula for “Base Course”.

2. Binder course shall conform to MHD Standard Specifications, Section M3, Table A Job Mix Formula for “Binder Course.”

3. Mix for bituminous curbs shall conform to MHD Standard Specifications, Section M3, Table A, Job Mix Formula for “Dense Mix” with any aggregate greater than ½”.

4. Wearing course for bituminous concrete walkways and athletic court shall be equivalent to MHD Standard Specifications, Section M3, Table A Job Mix Formula for "Surface Treatment” with a maximum aggregate size of 3/8".

2.02 TACK COAT

A. Tack Coat shall be bitumen Grade, AC-10, or AC-20 asphalt cement conforming to Section M3 of the Standard Specifications.

PART 3 - EXECUTION

3.01 PREPARATION

A. Make any corrections necessary to base material furnished and placed under SECTION 02200, EARTHWORK, to bring base course materials to sections and elevations shown on the Contract Drawings.

B. The contact surfaces of curbs, walls, manholes, catch basins or other appurtenant structures in pavement shall be painted thoroughly with a thin uniform coating of tack coat just before any bituminous mixture is placed against them.

3.02 PATCHES AND NEW PAVING ABUTTING EXISTING

A. Where the line of demarcation between new and existing paving occurs, the existing paving shall be saw-cut to provide a clean sharp joint. The pavement shall be sawn by an approved machine to a depth which will permit the cutting of the pavement without damage to the pavement left in place.

1. Protect sawn edges of paving from damage until new paving is placed against it. Existing pavement which is damaged, disturbed or settled, shall be cut back by the same method and replaced as directed by the Landscape Architect without additional cost to the Owner.

B. Where new bituminous paving meets existing paving the finish grades in the new work shall be adjusted if necessary, to blend smoothly with the existing pavement. Seal joint at saw-cut line with an approved bituminous emulsion. Notify the Landscape Architect of discrepancies before preceding with the work.

3.03 PLACEMENT

A. The mixtures shall be placed and compacted only at such times which permit the proper inspection and checking by the Landscape Architect.

B. The mixtures shall be placed only upon approved surfaces that are clean and dry, and when weather conditions are suitable. No bituminous material shall be applied when the temperature is below 32 F.

C. The temperature of bituminous concrete mixture when delivered to the site shall conform to the following, with a tolerance of plus or minus 20 F.

Air Temperature	Project Delivery Temperatures
35F	300F
40F	290F
6SF	280F
90 F, or over	270F

D. Place courses of bituminous concrete in conformance to application and depth requirements shown on the Contract Drawings and specified herein. Depths referenced shall be compacted thicknesses. Bituminous concrete for binder course and wearing or

top course shall be furnished and laid in accordance with Section 460 of the Standard Specifications, and as directed herein and by the details.

3.04 SPREADING

A. The equipment for spreading and finishing shall be mechanical, self-powered pavers, capable of spreading and finishing the mixture true to lines, grade, width and crown by means of fully automated controls for both longitudinal and transverse slope.

B. Mixtures shall be deposited in a mechanical spreader and immediately spread thereby, and then struck off in a uniform layer to the full width required and of such depth that each course, when compacted, shall have the required thickness and shall conform to the grade and cross section contour specified.

C. Hand Spreading: Spreading by hand methods will be permitted only for particular locations in the work which because of irregularity, inaccessibility or other unavoidable obstacles do not allow mechanical spreading and finishing.

D. Compaction:

1. After the paving mixture has been properly spread, compaction shall be obtained by the use of power rollers of approved design and weight per inch of roller. The rollers shall be steel wheeled supplemented with pneumatic-tired rollers where required.

2. Along curbs, structures and places not accessible with a roller, the mixture shall be thoroughly compacted with mechanical tamping devices. The surface of the mixture after compaction shall be smooth and true to the established line and grade.

3. The densities of the completed pavement shall be not less than 95% of the density obtained from laboratory compaction of a mixture composed of the same materials in like proportions.

E. All areas of finished paving on which water stands or which are found excessively uneven shall be promptly brought to the correct grade and line.

F. When tested with a ten (10) foot straightedge there shall be no deviation from true surface planes represented by the grade elevations shown on the Contract Drawings in excess of one-quarter (¼) inch.

G. Do any repair or patching to pavements outside the project site damaged by work of the contract. All patching work required shall be in accordance with requirements for new construction.

H. No vehicular traffic of any kind shall be allowed to pass over the newly finished surface

until it has had time to set. Twenty-four (24) hours will be considered sufficient time for the pavement to set in most cases, but this period may be extended by the Landscape Architect/Engineer as required by weather or other reasons.

I. Install frames and rims after installation of binder course for bituminous concrete pavement. Install wearing course after the installation of the frames and rims. Frames and rims shall have the same grade and slope as adjacent construction.

3.05 BITUMINOUS CONCRETE CURB INSTALLATION

A. Place bituminous curb in accordance with Section M3.11.00 and Section 0470 unless specified otherwise.

B. Clean the area under the curb prior to placing. Apply tack or prime coat.

C. Place the curb with a heavy duty automatic curb-laying machine capable of molding a dense, stable curb, true to line, grade and section.

D. Tack coat shall be placed between successive courses if more than forth-eight (48) hours have elapsed after placing the preceding course. The tack coat shall be applied at a rate of 0.10 to 0.25 gallons per square yard.

E. The bituminous concrete curb shall be placed in such a manner to produce a finished surface free from depressions, waves or other defects that would prevent proper drainage. The finished surface shall be uniform in texture and appearance.

F. After final placement, do not permit vehicular traffic near the curb until it has cooled and hardened.

G. Test in-place bituminous concrete curb for compliance with requirements for surface smoothness. Test using a 10 foot straight-edge applied with, and parallel to, the centerline of the curb. Tolerance for curb: ¼”.

3.06 QUALITY ASSURANCE

A. The Landscape Architect may require the Contractor to remove and replace at the Contractor’s expense any defective mix not conforming to the specified job mix formula.

B. If, at any time before the final acceptance of the work, any soft, imperfect places or spots shall develop in the surface, all such places shall be removed and replaced with new materials and then compacted until the edges at which the new work connects with the old become invisible, at no additional expense to the Owner.

3.07 CLEAN-UP

A. Keep all work areas free from accumulation of debris during the course of work under this Section.

B. At the completion of the paving, all rubbish, debris, waste materials from, and about the site, building, and structures, including tools, scaffolds, apparatus and appliances used in connection with work under this Section shall be legally disposed of and the premises shall be left in a clean condition.

END OF SECTION

SECTION 02515

PRECAST CONCRETE PAVERS

PART 1 - GENERAL

1.01 WORK INCLUDED

A. All of the Contract Documents, including the Contract Form, General Provisions, General Conditions, Supplemental Conditions, and all Attachments to the General Provisions, and Division 1 - General Requirements, apply to the work of this Section.

B. Provide all equipment and materials and do all work necessary to furnish and install the precast concrete pavers, as indicated on the Drawings and as specified.

1.02 RELATED WORK

A. Examine Contract Documents for requirements that affect work of this Section. Other Specification Sections that directly relate to work of this Section include, but are not limbed to:

1. Section 02200 - Earthwork
2. Section 02510 - Bituminous Concrete Paving & Curbing
3. Section 03300 - Cast-in-place Concrete.

1.03 REFERENCES

A. Comply with applicable requirements of the following standards. Where these standards conflict with other specified requirements, the most restrictive requirement shall govern.

1. American Association of State Highway and Transportation Officials (AASHTO):

Specifications	Standard Specifications for Highway Bridges
M 81	Cut-back Asphalt (Rapid-Curing Type)

2. American Society tor Testing and Materials (ASTM):

C 67	Sampling and Testing Concrete unit and Structural Clay Tile
C 144	Aggregate for Masonry Mortar
C 902	Pedestrian and Light Traffic Paving Concrete unit
D36	Softening Point of Bitumen (Ring-and-Ball Apparatus)
D 113	Ductility of Bituminous Materials
D 3381	Viscosity-Graded Asphalt Cement for Use in Pavement Construction

1.04 SUBMITTALS

A. Samples:

1. Concrete Unit Pavers: Furnish five individual Concrete Unit Pavers of each type as samples, showing extreme variations in color and texture.

2. Preformed Joint Filler: Submit sample showing color and texture.

B. Manufacturers Product Data: Manufacturers product data shall be submitted for the following items:

1. Precast Concrete paver.
2. Neoprene-modified asphalt adhesive.
3. Expansion joint filler.

C. Test Report: Submit reports from tests conforming to ASTM C 67 methods indicating:

1. Compressive strength, psi.
2. Absorption, 5 hr. submersion in cold water.
3. Absorption, 24 hr. submersion in cold water.
4. Maximum saturation coefficient.
5. Initial rate of absorption (suction).
6. Abrasion index.
7. Freeze-thaw.
8. Efflorescence.

D. Qualification data for firms and persons specified in "Quality Assurance" Article to demonstrate their capabilities and experience. Include list of completed projects with project names, addresses, names of Architects and Owners, plus other information specified.

1.05 QUALITY ASSURANCE

A. Installer Qualifications: Engage an experienced Installer who has successfully completed precast concrete paver installations similar in material, design, and extent to that indicated for this Project.

B. Single-Source Responsibility: Obtain each color, type, and variety of precast concrete paver, joint material, and setting material from a single source with resources to provide products and materials of consistent quality in appearance and physical properties without delaying progress of the Work.

1.06 SAMPLE PANEL

A. Construct a sample panel of precast concrete paving on each specified base and setting bed before start of any precast concrete paving. Sample panel shall include one fully constructed expansion joint to full depth and width of sample panel. Expansion joint shall be fully constructed including joint filler, backer rod, and joint sealant.

1. One-half of Sample panel shall illustrate pavers when laid with bevel up, and pavers laid with bevel down, for selection by the Owner.

2. Sample panel shall exhibit proposed precast concrete unit paver size, color range, texture, bond, jointing, paving pattern, and workmanship.

3. Expansion joint shall exhibit proposed joint filler size and width, backer rod, and color and texture of approved joint sealant.

4. Joints between concrete units shall be sand swept as specified.

5. Size of panel for shall be 7 feet long x 6 feet-4 inches wide, minimum.

B. Sample panel shall be Inspected by the Architect. If the sample Is not acceptable, construct additional panels at no cost to the Owner until an acceptable panel is constructed. Accepted panel shall become the standard for the entire job, and shall remain undisturbed until completion of all work.

1. When directed, demolish and remove sample panel from the Project site.

1.07 DELIVERY. STORAGE, AND HANDLING

A. Concrete unit pavers shall be carefully packed by the supplier for shipment.

B. Concrete unit pavers shall be stored off the ground and protected against staining and other damage.

C. Pavers damaged in any manner will be rejected and replaced with new materials at no additional cost to the Owner.

1.08 PROJECT CONDITIONS

A. Cold-Weather Protection: Do not use frozen materials or materials mixed or coated with ice or frost. Do not build on frozen subgrade or setting beds. Remove and replace concrete unit paver work damaged by frost or freezing.

B. Weather Limitations for Bituminous Setting Bed: Comply with the following requirements:

1. Apply asphalt primer coat when ambient temperature is above 50 deg F (10 deg C) and when temperature has not been below 35 deg F (1 deg C) for 12 hours immediately prior to application. Do not apply when base is wet or contains an excess of moisture.

2. Install bituminous setting bed only when atmospheric temperature is above 40 deg F (4 deg C) and when base is dry.

C. Weather Limitations: Protect unit paver work against freezing when atmospheric temperature is 40 deg F (4 deg C) and falling. Heat materials and provide temporary protection of completed portions of unit paver work. Comply with International Masonry All-Weather Council's "Guide Specification for Cold-Weather Masonry Construction," Section 04200, Article 3.

D. Hot-Weather Requirements: Protect unit paver work when temperature and humidity conditions produce excessive evaporation of setting beds and grout. Provide artificial shade and wind breaks and use cooled materials as required. Do not apply mortar to substrates with temperatures of 100 deg F (38 deg C) and above.

1.09 PROTECTION OF FINISHED SURFACES

A. Finished surfaces adjacent to the concrete unit paving work shall be adequately protected from soiling, staining, and other damage during construction.

PART 2 - PRODUCTS

2.01 PRECAST CONCRETE UNIT PAVERS

A. Precast Concrete Unit Paver "Colonial Pavers" manufactured by Ideal Block Company, Inc. 232 Lexington Street, Waltham, MA p 781-894-3200 or equal conforming to the following:

1. Pavers shall be solid, interlocking paving units, made from normal-weight aggregates in sizes and shapes indicated. Pavers shall conform to ASTM C936 summarized as follows:

a. Average compressive strength shall be 8,000 psi with no individual unit under 7,200 psi.

b. Average water absorption (ASTM C 140) shall be 5% with no unit greater than 7%.

2. Pavers shall be dimensioned 4" x 8" x 2-3/8" thick.

B. Color of pavers shall be chosen by the Owner from manufacturer's standard color choices for Colonial Pavers, or equal.

2.02 BITUMINOUS SETTING BED

A. Asphalt cement to be used in the bituminous setting bed shall conform to ASTM D 3381. Viscosity grade shall be AC - 10 or AC- 20.

B. Fine aggregate to be used in the bituminous setting bed shall be clean, hard sand with durable particles and free from adherent coating, lumps of clay, alkali salts, and organic matter. Aggregate shall be uniformly graded from "coarse" to "fine" with 100% by weight passing the No. 4 sieve and shall meet the gradation requirements when tested in accordance with ASTM C 136.

C. Fine aggregate shall be dried and shall be combined with hot asphalt cement, and the mix shall be heated to approximately 300^0F at an asphalt plant. The approximate proportion of materials shall be 7% cement asphalt and 93% fine aggregate. Each ton of material shall be apportioned by weight in the approximate ratio of 145 lb. asphalt to 1,855 lb. sand. The Contractor shall determine the exact proportions to produce the

best possible mixture for construction of the bituminous setting bed to meet specified requirements.

2.03 NEOPRENE-MODIFIED ASPHALT ADHESIVE

A. Neoprene modified asphalt adhesive shall meet the following requirements:

1. Mastic (asphalt adhesive):

a. Solids (base) content by volume = 75±1%.
b. Weight = 8 to 8.5 lb/gal.
c. Solvent vehicle = Varsol (over 100^0F. flash).

2. Base (2% neoprene, 10% fibers, 88% asphalt):
a. Melting point (ASTM D 36) = 200^0F., minimum.
b. Penetration at 77^0F. 100 gram load 5 second (0.1 mm) = 23 to 27.
c. Ductility (ASTM D 113 at 25^0C, 5 cm/minute) = 125 cm, minimum.

2.04 CUT-BACK ASPHALT

A. Primer for concrete base slab beneath concrete unit pavers subject to vehicular traffic shall be with rapid curing cut-back asphalt conforming to AASHTO M 81.

2.05 EDGE RESTRAINTS

A. Edge restraints shall be as shown on the Drawings and of such dimension as the be below finished surface of pavement after installation. Edge restraints shall be metal. Heat resistant plastic edge restraints may be used if recommended by the manufacturer for use with bituminous setting beds.

2.06 SAND JOINT FILLER & BINDER

A. Joint filler between paver joints shall be a clean, washed, uniformly well graded masonry sand conforming to ASTM C 144, except that the fineness modulus shall be 2.25± 0.10. Sand shall be from a single source.

B. Binder for joint sand shall be “SandLock” by Pave Tech (1-800-728-3832) or approved equal.

2.07 GEOTEXTILE AT WEEPHOLES

A. Filter fabric at weepholes shall be a permeable light-weight non-woven fabric recommended by the manufacturer for separation of soil aggregates.

2.08 WATER

A. Water shall be potable and shall be free of injurious contaminants.

2.09 CONCRETE BASE COURSE

A. Provide concrete base course with as specified in Section 03300 - Cast-in-Place Concrete .

1. Provide expansion joints at 30' o.c. maximum, with preformed filler and sealant as specified in Section 03300.

2. Provide weep holes in concrete base, 20' o.c. and at low points, covered with filter fabric at interface with bituminous base.

PART 3 - EXECUTION

3.01 INSTALLATION - GENERAL

A. Concrete unit pavers shall be set true to the required lines and grades in the pattern detailed on the Drawings. Concrete unit pavers shall be neatly cut and fitted at all perimeters and closures to fit neatly and closely with joint uniform in specified thickness. Neatly cut pavers with guillotine or saw. Joint width shall not exceed 1/16".

B. Tolerances: Do not exceed 1/16" inch unit-to-unit offset from flush (lippage).

C. There is no tolerance for required ADA/MAAB slopes on paved walkways or plaza areas. Cross-slopes shall not exceed 2% and longitudinal slopes shall be less than 5%, measured with a 2' long smart level.

3.02 ACCEPTABILITY OF CONCRETE BASE

A. Contractor shall examine the concrete base slab to determine Its adequacy to receive Concrete unit paving and setting bed. Concrete shall have fully cured with sealed expansion joints. Evidence of inadequate base shall be brought to the immediate attention of the Architect.

B. Vacuum clean concrete substrates to remove dirt, dust, debris, and loose particles.

C. Start of work of this Section shall constitute acceptance of concrete base slab.

3.03 CUT-BACK ASPHALT PRIME COAT

A. Cut-back asphalt shall be applied to concrete base slab at a rate sufficient to act as an adhesive between the concrete slab and the bituminous setting bed.

3.04 BITUMINOUS SETTING BED

A. Bituminous setting bed shall be installed over the fully cured concrete base. Control bars 3/4 in. deep shall be placed directly over the base. If grades must be adjusted, wood chocks under depth control bars shall be set to proper grade. Set two bars parallel to each other to serve as guides for the striking board. The depth control bars must be set carefully to bring the pavers, when laid, to proper grade.

B. While still hot (not less than 250^0F.) some of the bituminous bed material shall be

placed between the parallel depth control bars. This bed shall be pulled with the striking board over the control bars several times. After each passage, low porous spots shall be showered with fresh bituminous material to produce a smooth, firm, and even setting bed. As soon as this initial panel is completed, advance the first bar to the next position in readiness for striking the next panel. After the depth control bars and wood chocks have been removed, carefully fill any depressions that remain.

C. The setting bed shall be rolled with a power roller to a nominal depth of 3/4 inch, while still hot. The thickness shall be adjusted so that when the Concrete units are placed and rolled, the top surface of the pavers will be at the required finished grade.

D. A coating of neoprene-modified asphalt adhesive shall be applied by mopping, squeegeeing, or troweling over the top surface of the bituminous setting bed so as to provide a bond under the pavers.

1. If adhesive is trowel-applied, trowel shall be serrated type with serrations not to exceed 1/16 inch.

3.05 SETTING PRECAST CONCRETE UNIT PAVERS

A. Concrete unit pavers shall be on a bituminous setting bed over a prepared concrete base. All setting shall be done by competent masons under adequate supervision.

B. Concrete unit pavers with chips, cracks, stains, or other defects which might be visible in the finished work shall not be used.

C. After the modified asphalt adhesive is applied, carefully place the pavers by hand in straight courses with hand tight joints and uniform top surface.

D. Concrete unit pavers shall be set true to the required lines and grades in the pattern detailed on the Drawings. Concrete unit pavers shall be neatly cut and fitted at all perimeters and closures to fit neatly and closely, with joints uniform in thickness. Pavers shall be cut with a water-cooled, cut-off wheel masonry saw using a diamond blade. Protect newly laid unit pavers with panels of plywood on which workers stand. Advance protective panels as work progresses but maintain protection in areas subject to continued movement of materials and equipment to avoid creating depressions or disrupting alignment of unit pavers. If additional leveling of paving is required, and before treating joints, roll with power roller after sufficient heat has built up in the surface from several days of hot weather. Check and maintain alignment as often as necessary.

E. Tolerances: Do not exceed 1/32 inch unit-to-unit offset from flush (lippage) and a tolerance of 1/8 inch in 10 feet from level or slope as indicated for finished surface of paving.

F. Expansion and Control Joints: Provide for sealant-filled joints at locations and of widths indicated. Sealant materials and installation are specified in Section 02764 - Joint Sealants.

3.06 JOINT TREATMENT

A. Joints between pavers shall be hand tight and shall be uniform in thickness. Joint thickness shall not exceed 1/16 inch.

B. Joint filler shall be swept dry into the joints between pavers until the joints are completely filled. Surface shall be swept clean. Swept surface shall than be thoroughly dampened with a low-volume fine spray of water.

3.07 CLEANING AND PROTECTION OF CONCRETE UNIT SURFACES

A. Remove and replace unit pavers that are loose, chipped, broken, stained, or otherwise damaged or if units do not match adjoining units as intended. Provide new units to match adjoining units and install in same manner as original units, with same joint treatment to eliminate evidence of replacement.

B. After completion of concrete unit paving, surfaces shall be carefully cleaned, removing all dirt, excess mortar, filler, and stains.

C. Provide final protection and maintain conditions in a manner acceptable to Installer, which ensures unit paver work being without damage or deterioration at time of Substantial Completion.

END OF SECTION

SECTION 02540

SAFETY SURFACING

PART 1 - GENERAL

1.01 GENERAL PROVISIONS

A. Attention is directed to the General Conditions of the Contract, all Divisions of the Specifications and the Contract Drawings, all of which apply to this section.

1.02 SCOPE OF WORK

A. Furnish and install safety surfacing of type and in locations shown on the Drawings and specified herein. This includes:

1. Poured-in-place (PIP) safety surfacing (Type 1-Two Layer) at play areas
2. Poured-in-place (PIP) safety surfacing (Type 2-1 Layer) at exercise stations.

1.03 RELATED WORK

A. Section 02200 - Earthwork: Compacted crushed stone base
B. Section 02860 - Play Equipment
C. Section 03300 - Cast-in-Place Concrete: Concrete curb at perimeter

1.04 WARRANTY

A. The manufacturer of Type 1 and Type 2 surfacing shall provide to the Owner the manufacturer's standard warranty which shall be at a minimum for a 5 year period from the completion of the installation. The warranty shall guarantee the impact attenuation, color stability, and physical stability against cracking or separation of layers.

1.05 DEFINITIONS

A. Critical Height: Standard measure of shock attenuation. According to CPSC No. 325, this means "the fall height below which a life-threatening head injury would not be expected to occur".

B. EPDM - Ethylene propylene diene monomer

C. Fall Height: According to ASTM 1487, this means "the vertical distance between a designated play surface and the protective surfacing beneath it." The fall height of the playground equipment should not exceed the Critical Height of the protective surfacing beneath it.

D. SBR - Styrene butadiene rubber

E. TPV - Thermoplastic vulcanizate

F. Use Zone: According to ASTM F1487, this means “the area beneath and immediately adjacent to a play structure that is designated for unrestricted circulation around the equipment and on whose surface it is predicted that a user would land when falling from or exiting the equipment.

1.06 SUBMITTALS

A. Safety Surfacing Type 1:

1. Submit manufacturer’s certificate verifying that EPDM/TPV granules are manufactured from pre-consumer virgin rubber.

2. Submit manufacturers literature for top course (aliphatic primer) and base course primers demonstrating compliance with the specifications.

3. Submit manufacturer’s literature demonstrating specification compliance for cushion course.

4. Submit manufacturer’s literature documenting specification compliance with the following requirements:

(a) water permeability
(b) dry & wet coefficient of friction
(c) tensile strength
(d) tear resistance
(e) flammability
(f) UV stabilization method.

5. Submit depth of safety surfacing for different fall heights.

6. Provide a list of five (5) installations of rubber safety surfacing completed by proposed installer in the last five years using the same system, including project name, phone number, address, and contact.

7. Installer Certificates: Signed by manufacturer certifying that installers comply with requirements.

8. Manufacturer’s Certificates: Signed by the manufacturer certifying that they comply with the requirements.

9. Product Test Reports: From IPEMA indicating that playground surface system complies with the requirements, based on comprehensive testing of the product as follows: ASTM F 1292 latest version, ASTM F 1951 latest version and CPS guidelines for impact attenuation for the fall height required by the equipment and the depth of safety surfacing. Product testing shall have been done within the last five (5) years.

10. Submit manufacturer's specifications for stone base course including required sieve gradation of stone, subgrade slope, and permissible tolerances in grade variation.

12. Maintenance Data: Submit manufacturer's printed installation and maintenance instructions.

13. Submit Performance Warranty, signed and dated for poured-in-place surfacing.

B. Safety Surfacing Type 2:

1. Submit depth of safety surfacing for different fall heights.

2. Manufacturer's literature demonstrating compliance with the Specifications.

C. Samples:

1. Type 1: Provide ten (10) 4-inch diameter round samples of specific blends of standard colors requested by the Landscape Architect for final color selection by the Owner.

2. Type 2: Submit manufacturer's color samples for standard color choices.

1.07 REFERENCES

A. ASTM F 1292 - Standard Specification for Impact Attenuation of Surface Systems Under and Around Playground Equipment.

B. ASTM F 1951 - Standard Specification for Determination of Accessibility of Surface Systems Under and around Playground Equipment.

C. U.S. Consumer Product Safety Commission (CPSC), Public Playground Handbook for Safety.

D. ASTM D2434- Standard Test Method for Permeability of Granular Soils (Constant Head)

E. Americans with Disabilities Act Guidelines (ADAAG) for Building and Facilities, 36 CFR Part 1191

F. MAAB CMR 521 Regulations

1.08 FALL HEIGHTS

A. Refer to Drawings.

1.09 QUALITY ASSURANCE

A. Surfacing manufacturer shall have marketed the surfacing system specified in the

United States for at least five (5) years.

B. Surfacing manufacturer shall have IPEMA Certification specific to poured in place safety surfacing of the system specified.

C. Installer shall be trained and certified by the manufacturer as a qualified installer of their product. In addition, the installer shall have experience in installing at least three (3) installations of similar size and complexity.

D. Rubber materials shall be supplied by an ISO9001 certified manufacturer.

1.10 REGULATORY REQUIREMENTS

A. Installation of surfacing shall conform to applicable requirements of ADAAG - Americans with Disabilities Act Accessibility Guidelines, U.S. Architectural and Transportation Barriers Compliance Board, Washington, D.C. - latest edition, and regulations of the Commonwealth of Massachusetts Architectural Access Board (MAAB), 521 CMR.

1.11 JOB CONDITIONS

A. At the time of application ambient air temperature shall be between 40 degrees and 90 degrees F and remain so for at least 72 hours after completion, unless otherwise specifically allowed by the manufacturer of the safety surface. There shall be no fluctuation in temperature greater than 15 degrees F during the installation period, or 25 degrees F during the curing time. Synthetic safety surfacing shall be installed on a dry subsurface, with no prospect of rain within the initial drying period.

1.12 COORDINATION

A. Coordinate construction of playground surface systems with installation of playground equipment and perimeter curbing to verify accurate use zones and fall heights.

B. The Contractor shall coordinate with the installer and manufacturer of the safety surfacing to ensure that all manufacturer's/installer's requirements for the base course are met including subgrade slope, drainage, maximum variation in grade of surface, and gradation of stone base.

1.13 DELIVERY STORAGE AND HANDLING

A. All packaged materials shall be delivered to the site in original unopened containers clearly indicating manufacturer name, brand name, and other identifying information.

B. All materials shall be protected from weather and other damage prior to application, during application and while curing. Materials shall be stored at a minimum temperature of 40 degrees and a maximum temperature of 90 degrees.

C. Protect UV-light-sensitive materials from exposure to sunlight.

PART 2 - MATERIALS

2.01 POURED-IN-PLACE SAFETY SURFACING - Type 1: at Play Areas

A. Manufacturers:

1. Subject to compliance with the Specifications, manufacturers offering products that may be incorporated into the work include, but are not limited to, the following:

a. Surface America, Playbound PIP, local representative M.E. O'Brien & Sons, Medfield, MA (508-359-4200)

b. Duraturf PIP, local representative Sport Surface Specialties, East Aurora, NY (716-652-2039)

c. No-Fault Safety Surfacing, No Fault Sport Group, LLC, (225-215-7760).

d. Or Equal. To be considered equal, a manufacturer must meet all requirements of the Specifications including but not limited to the requirements for current IPEMA certification for the poured in place surfacing to the used and the use of virgin rubber for EPDM/TPV granules.

B. Playground surfacing shall be a system formulated for site-mixing and application from rubber particles in a polyurethane binder, forming a water permeable, UV-light stable, impact-attenuating, seamless playground surface system with layered construction consisting of a lower-density formulation of SBR particles and polyurethane forming a cushion-base layer bonded to higher-density formulation of EPDM or TPV rubber particles and aliphatic polyurethane, forming a top-layer wearing surface. Surfacing system shall be porous.

C. Surface Characteristics

1. Impact Attenuation: HIC of no more than 1000; peak deceleration of no more than 200 g's.

2. Dry static coefficient of friction (ASTM D2047) - Min. 0 .9

3. Wet static coefficient of friction (ASTM D2047) - Min. 0.7

4. Accessibility of Surface System: ASTM F1951: Pass

5. Permeability: .04 gal/square yard/sec

6. Tensile strength, measured by ASTM D412 shall be not less that 25 psi.

7. Tear resistance (ASTM D624) - 140%.

8. Flammability: shall pass ASTM D2859.

D. Top Course:

1. The top wearing course shall be a minimum ½" thickness monolithic layer composed of EPDM or TPV particles bound with polyurethane binder. The urethane content shall be 18% minimum by weight of the entire mixture.

(a) Polyurethane Binder for top course

(1) Binder for top course shall be an **aliphatic** weather resistant, HDI-based UV-stabilized, flexible, non-hardening, 100 percent solids polyurethane complying with requirements of authorities having jurisdiction for nontoxic and low VOC content. No toluene diphenel isocyanate (TDI) shall be used. No filler materials shall be used in urethane such as plasticizers and the catalyzing agent shall contain no heavy metals.

(b) **TPV and EPDM particles shall be manufactured from pre-consumer virgin rubber**. Particles from post-consumer rubber are not acceptable.

(1) Approved sources for EPDM or TPV particles:

a. Rosehill Polymers, England as distributed by American Recycling Center, Owoosi, Michigan.

b. Melos-GMBH

c. Granules manufactured in the US from virgin pre-consumer rubber by an ISO9001 certified company.

(2) TPV and EPDM particles shall remain consistent in gradation and size as follows:

a. TPV particles shall be sized 1 mm - 4 mm.

b. EPDM particles shall be sized 1 mm - 3 mm.

c. Strand, shaved, chipped or shredded rubber is not acceptable in the wearing course layer.

(3) Color of particles shall be an integral dye. Color from coating or colored primer is not acceptable.

a. Pricing shall be based on a top course of 100% Color (no black) chosen by the Owner from the manufacturer's

standard color selections.

E. Base Cushion Layer: The base impact layer shall be a monolithic layer composed of shredded 100% styrene butadiene rubber (SBR), or manufacturer's standard formulation of pre-consumer recycled 5/8" chunk rubber, bound together with a polyurethane binder.

1. The dust content shall be no greater than 4%.

2. Binder shall be a single component polyurethane designed for use with rubber granule material for outdoor installations.

3. Urethane in the base layer shall be a minimum of 14% by weight of the entire mix.

2.02 SAFETY SURFACING - Type 2: at Exercise Stations

A. Safety surfacing at exercise stations shall be Dura Turf Bonded by Sports Surface Specialities East Aurora, NY (716-652-2039) or equal meeting the following requirements:

1. Surfacing shall be 100% recycled shredded rubber, detailed as shown on the drawings.

2. Surface shall provide required impact attenuation for fall heights shown.

(a) Surfacing shall be IPEMA certified for fall height attenuation.

3. Surfacing shall meet ASTM & ADA surfacing criteria.

4. Color shall be selected by the Owner from Manufacturer's standard colors.

2.03 BASE COURSE FOR POURED-IN-PLACE SURFACING, Type 1 & 2

A. Base course shall be crushed stone as specified in Section 02200 - Earthwork, with gradation adjusted to manufacturer's recommendations. Bid shall include any additional costs necessary to adjust specified crushed stone base to the gradation and requirements of the specific manufacturer of the surfacing.

PART 3 - INSTALLATION, Type 1 & 2

3.01 BASE PREPARATION

A. The subgrade under the base course shall be installed and compacted as specified in Section 02200-Earthwork. Subgrade shall be tested as specified in Section 02200 - Earthwork.

1. Slope subgrade of base course 2%.

B. Install required underdrains.

C. Crushed stone base course shall be installed and compacted in Section 02200 - Earthwork, fully compacted in 2" lifts to 95% compaction. Contractor shall perform compaction testing specified in Section 02200 - Earthwork on first lift and last lift.

D. Specific size grading of aggregate surface shall be as required by the manufacturer/installer.

3.02 INSPECTION OF BASE

A. Verify that base is installed to correct slopes, grades and tolerances prior to installation of poured in place surfacing. Prior to application of the poured in place system, the applicator shall evaluate the substrate's structural performance, and notify all contractors and the landscape architect of any deficiencies. Work shall not proceed until unsatisfactory conditions are corrected.

B. Prior to installation, verify that cast-in-place perimeter curbing has been set to correct lines and grades to ensure adequate safety zones and grades not exceeding 2%.

1. Curb shall be flush with safety surfacing with no deviation greater than 1/8".

C. Refer to Paragraph 1.11 Job Conditions for environmental requirements. Temperature of all components shall be checked to ensure that their temperature is equal to or greater than 40 degrees F. Components that are below the required application temperature shall not be used until the temperature is elevated to the specified application temperature.

1. Install safety surfacing to the dimensions and limits shown on the Drawings.

2. Surfacing shall be installed in strict accordance with the submitted manufacturer’s printed installation instructions and as detailed on the Drawings.

3.03 PROTECTION

A. Provide protection of surface during curing process. Clean prior to final acceptance of the project.

END OF SECTION

SECTION 02595

TRAFFIC PAVEMENT MARKING

PART 1 - GENERAL

1.01 GENERAL PROVISIONS

A. Attention is directed to the General Conditions of the Contract, all Divisions of the Specifications and the Contract Drawings, all of which apply to this section.

B. Examine and coordinate all Contract Drawings and other section of the specifications for requirements which affect work of this section whether or not such work is specifically mentioned in this section. Coordinate work with other trades to assure the steady progress of all work under the Contract. The Contractor shall refer to the Contract Documents for all new work and coordinate how it relates to this Section.

1.02 SCOPE OF WORK

A. Work under this Section shall include all labor, materials, services, equipment, transportation and accessories and the performance of all operations necessary to complete the work of this Section, as indicated on the Contract Drawings and/or as specified herein.

B. The work shall include, but is not limited to, the following:

1. Pavement markings for parking lot including parking space delineation, HC access aisle striping, and vehicular access no parking striping.

1.03 RELATED WORK

A. The following items are not included in this Section and will be performed under the designated Sections:

B.

1. Section 32 12 16 - Bituminous Concrete Paving

1.04 SUBMITTALS

A. Submit the following in accordance with the requirements of the General Conditions:

1. Paint: Submit manufacturer's product data demonstrating specification compliance for pavement marking paint.

(a) Submit manufacturer's directions for application, including permissible temperature for application and storage, drying time, coating thickness and application rates, and period of curing time prior to application to new bituminous concrete.

2. Submit installer name and evidence of qualifications.

1.05 QUALIFICATIONS

A. Installer shall be from a company with at least 5 years of experience in commercial painting.

1.06 REGULATORY REQUIREMENTS

A. Materials and handling of paint shall conform to all environmental and OSHA regulations.

1.07 DELIVERY STORAGE AND HANDLING

A. All packaged materials shall be delivered to the site in original unopened containers clearly indicating manufacturer name, brand name, and other identifying information. Paint shall be stored within the temperature ranges indicated by the manufacturer.

1.08 ENVIRONMENTAL REQUIREMENTS

A. Paint shall be applied within the temperature ranges recommended by the paint manufacturer.

PART 2 - MATERIALS

2.01 PAINT

A. Vehicular pavement line marking:

1. Paint for pavement line marking of parking lot shall be a fast dry water based road paint conforming to Federal Specification TT-P-1952 D or E Types I or II, or a regular dry water based road paint conforming to Federal Specification TT-P-1952B.

2. Paint for parking lines and striping shall be white.

3. Paint for International Symbol of Accessibility shall be white lines, on a blue background.

PART 3 - EXECUTION

3.01 APPLICATION OF PAVEMENT MARKINGS - GENERAL

A. Paint shall be applied according to manufacturer's instructions. Adhere to recommended curing period for new bituminous pavement prior to paint application.

B. Pavement surface should be dry and free of sand, grease, oil and other foreign substances prior to the application. The ambient air temperature is to be a minimum of 45 degrees Fahrenheit and rising at the start of paint application. Do not apply paint when rain is imminent.

3.02 VEHICULAR PAVEMENT LINE MARKING

A. Width of lines shall be 4" unless otherwise noted in the Drawings.

B. Apply two coats of paint in the locations and colors indicated on the drawings. Thickness of each coat shall be as recommended by the manufacturer. Painted markings are to be protected until they are dry enough to withstand traffic without tracking or being damaged.

1. Stencil handicapped parking spaces with the international symbol of access in white on a blue background.

3.03 GUARANTEE AND ACCEPTANCE

A. Painted lines and surfaces shall be guaranteed for a period of one year from final acceptance against cracking, peeling, checking, or other defect. The Contractor will repair, re-coat or otherwise make satisfactory, any failed lines or areas, at no cost to the Owner.

END OF SECTION

SECTION 02667

WATER SERVICE SYSTEMS

PART 1 - GENERAL

1.01 GENERAL PROVISIONS

A. All of the Contract Documents, including the Contract Form, General Provisions, General Conditions, Supplemental Conditions, and all Attachments to the General Provisions, and Division 1 - General Requirements, apply to the work of this Section.

B. Examine and coordinate all Contract Drawings and other sections of the specifications for requirements which affect work of this section whether or not such work is specifically mentioned in this section. Coordinate work with other trades to assure the steady progress of all work under the Contract. The Contractor shall refer to the Contract Documents for all new work and coordinate how it relates to the installation of water service systems.

1.02 SCOPE OF WORK

A. Work under this section shall include (1) connecting to the existing water service at the existing meter pit on Trapelo Road for irrigation, (2) the installation of a new 2" water service to support the new irrigation system, as indicated on the Drawings.

B. Responsibilities will include furnishing and installing of two (2) inch type “K” copper piping, corporation stops and boxes, curb stops and boxes, thrust blocks, straps and clamps for pipe restraints, strainers, backflow preventer, testing and disinfection (sterilization) of mains, installation of one (1) 1-1/2" water meter, and one (1) 2" inch backflow preventer, and all other specified work and connections as shown on the plans and details. The work by the Contractor shall be performed in accordance with the recognized plumbing standards and all applicable standards. The work shall include all fittings and piping and other appurtenances necessary for complete and proper installation of the work, including connections to the existing work. All lines shown are approximate and must be coordinated with other utilities or site improvements to be installed.

C. All work herein described and/or shown on the Plans shall be in strict accordance with the best-recognized practices for water service installations. The standards set forth in the selection of materials and supplies are intended to conform to those adopted by the City of Waltham, and the Contractor shall further familiarize himself with the Municipality’s requirements when the occasion or choice of materials or supplies so demand.

D. Per Municipality regulations and requirements, the Contractor performing the work of this section shall be a MA licensed master plumber.

E. The Municipality, through their authorized agents, reserves the right to make inspections of the work during its manufacture or progress.

F. Sheeting, shoring and bracing, excavation and backfill shall be accomplished in accordance with Section 02200 - Earthwork, the applicable provisions of the Standard Specifications, and OSHA Construction Regulations Title 29 CFR Part 1926. The cost of the sheeting, shoring and bracing, unclassified excavation and backfill shall be included under the Lump Sum Bid.

1.03 RELATED WORK

A. Section 02100 - Site Preparation and Demolition.
B. Section 02200 - Earthwork: Refer to Earthwork for excavation, backfill, and fill materials.
C. Section 02810 - Irrigation System.
D. Section 03300 - Cast-in-Place Concrete.
E. Section 15400 - Fountain

1.04 REFERENCES

A. The following standards and definitions are applicable to the work of this Section to the extent referenced herein:

1. Standard Specifications: Commonwealth of Massachusetts Standard Specifications for Highways and Bridges, latest edition.
2. OSHA Construction Regulations Title 29 CFR Part 1926.
3. ASME B16.1 Cast Copper Alloy Solder Joint Pressure Fittings.
4. ASTM B88 Seamless Copper Water Tube.
5. ASTM D1557 Test Methods for Moisture-Density Relations of Soils and Soil-Aggregate Mixtures Using 10 lb (4.54 Kg) Rammer and 18 inch (457 mm) Drop.
6. AWWA C500 Gate Valves, 3 through 48 in NPS, for Water and Sewage Systems.
7. AWWA C504 Rubber Seated Butterfly Valves.
8. AWWA C507 Ball Valves
9. AWWA C508 Swing-Check Valves for Waterworks Service, 2 in through 24 in NPS.
10. AWWA C509 Resilient Seated Gate Valves 3 in through 12 in NPS, for Water and Sewage Systems.
11. AWWA C800 Ball Valve Curb Stops and Corporation Stops
12. ASTM B-62 Ball Valve Curb Stops
13. ASTM D2241 Poly (VinylChloride) (PVC) Plastic Pipe(SDR-PR).
14. ASTM D2466 Poly (VinylChloride) (PVC) Plastic Pipe Fittings, Schedule 40.
15. ASTM D2855 Making Solvent-Cemented Joints with Poly (Vinyl Chloride) (PVC) Pipe and Fittings.

1.05 SUBMITTALS FOR REVIEW

A. Product Data: Provide data on pipe materials, pipe fittings, valves, hydrants and accessories.

1.06 SUBMITTALS AT PROJECT CLOSEOUT

A. Record actual locations of piping mains, valves, connections, thrust restraints, and invert elevations.

B. Identify and describe unexpected variations to subsoil conditions or discovery of uncharted utilities.

PART 2 - MATERIALS

2.01 MATERIALS

A. Gate Valve: Gate valves for water lines shall be New York Pattern Metropolitan Type or AWWA C500-71, in accordance with requirements of the City of Waltham Water Department. Gate valves shall turn right to open and be rated at 200 psi working pressure; 350 psi hydrostatic test pressure. Gate valve outlet and connection shall be furnished with threaded joints.

1. Gate valve stems shall be manganese bronze having tensile strength of not less than 35,000 psi, and an elongation of not less than 15% in 2 inches.

2. Gate valves shall be furnished with 0-ring stem seat that utilizes two 0-rings. The upper 0-ring shall serve as the pressure seal. The design of the valve and seal plate shall be such that the seal plate can be fitted with new 0-rings when the valve is under pressure in the fully open position. Housing for the valve stem thrust collar shall be carefully machined and fully bronze lined.

3. Gate valve disc shall be cast iron and shall be accurately machined to receive bronze disc seat ring. The disc seat ring surface in contact with the iron disc and the conetail projections shall be rolled, peened or pressed into the machine grooves on the iron discs and when secured in place, a rough and finish cut shall be taken over the disc seat ring bearing surfaces.

4. Gate valve wedges shall be made of bronze.

B. Ball Valve Curb Stop: Ball valve curb stops for water lines shall be Mueller Co., 633 Chestnut Street, Suite 1200, Chattanooga, TN 37450, p 800-423-1323, f 217-425-7537, Mueller Mark II Oriseal Curb Valve Mueller 110 Model Number H-15219, or approved equal, cast bronze stop and waste, in accordance with requirements of the City of Waltham Water Department. Ball valves shall be rated at 300 psi working pressure; 350 psi hydrostatic test pressure. Ball valve outlet and connection shall be furnished with quick style compression connections.

1. Ball valve shall be furnished with integral checks to allow for 90° rotation only.

2. Ball valve shall be furnished with one piece cap and stem.

3. Ball valves shall be furnished with double Buna-N Stem O-Rings and seals.

4. Ball valves shall be furnished with TFE or Fluorocarbon Coated Brass Ball.

C. Copper Tubing

1. Copper pipe for buried service two (2) inch diameter and smaller, as required, shall be soft, annealed, seamless copper tubing conforming to Federal Specification WW-T-799E or ASTM Standard B88-76, Type “K”.

2. Copper service pipe for installation in meter pits, valves, manholes, and backflow preventer cabinets, 2 inch diameter and smaller, shall be ASTM B88, Type “K”, hard copper tubing.

3. The Contractor shall furnish the Owner with satisfactory evidence that the copper tubing meets the requirements of these Specifications.

4. Joints in the copper service shall be kept to a minimum.

    a) For buried application, joints shall be made with cast brass three-part compression couplings or flared tube fittings conforming to ANSI Standard Specifications B 16.26, latest issue. Bends in copper service pipe, particularly gooseneck bends, shall be made with a tool especially designed for the purpose.

    b) Pipe joints inside meter vaults and backflow preventer cabinets shall be fittings conforming to ANSI B 16.18 cast bronze solder fittings, or ANSI B 16.22 wrought copper solder fittings and couplings. Solder shall be ASTM B32, Grade *95* TA, up to 250 degrees. Solder threaded bronze fittings will be used for connections of pipe to meters, strainers, valves, backflow preventers and pipe nipples.

5. PVC Piping

    a) PVC pipe shall be as sized on the drawings and details, Class 200, SDR 21, solvent weld PVC, ASTM No. D1784 as manufactured by Cresline or approved equal.

    b) Fittings for all PVC piping shall be Schedule 40 solvent weld PVC as manufactured by Dura, Lasco, or approved equal.

    c) PVC solvent shall conform to ASTM and be NSF approved. Solvent shall be appropriate for gluing of pipes and fittings up to 6 inches in size. Solvent shall be as manufactured by IPS, Rectorseal, Uni Weld, or approved equal and shall be used in conjunction with an appropriate primer.

6. Water Meters

    a) Water meters shall be furnished by the City of Waltham Water and Sewer Department, and installed by the Contractor within the designated backflow preventer above ground cabinet. The water meters shall be a 1-½ inch for the irrigation system, Neptune T-l0, or approved equal, with provisions for a remote ARB reading device to be mounted to the backflow preventer cabinet.

7. Backflow Preventer

a) Backflow preventer shall be a 2” Reverse Principle Backflow Prevention Device (or Assembly), Watts #009-M2Q2, or approved equal and shall come complete with strainers, ball valves, and threaded couplings.. Final approval of device selection will be based on submittal of design data sheet to Waltham Water Department, Cross Connection Program.

b) Supply one complete rubber parts kit, item number RK009RT 009 which shall include diaphragm, two disc assemblies, stem O-rings, cover O-ring, two seat O-rings and RV seat O-ring, and shall be stored in the backflow assembly cabinet.

8. Concrete for Thrust Restraints: Concrete type specified in Section 03300.

PART 3 - EXECUTION

3.01 INSTALLATION

A. Refer to Section 02200 - Earthwork and the Drawings for excavation, backfill, compaction, and other trenching requirements.

3.02 PIPE AND FITTINGS

A. All pipe, fittings and such other items shall be carefully examined for defects immediately before lowering into the trench and no pipe or fittings shall be laid which is known to be defective in anyway. Any pipe or fitting discovered as defective after laying shall be promptly removed and replaced. Proper and suitable tools and appliances for the safe and convenient handling and laying of the pipe, fittings and appurtenances shall be used, and great care shall be taken to prevent damage to the pipe coating and lining. Pipe and fittings shall be thoroughly cleaned before being lowered into the trench and shall be kept clean until accepted in the completed work. Open ends shall be closed with wooden or other suitable bulkheads at all times when pipe laying is not actually in progress. Pipes shall be carefully lowered into trenches with rope slings or other mechanical means. Rolling or dropping the pipe into trenches will not be permitted. Whenever the pipe requires cutting to fit the line, the work shall be done only by experienced persons and in such a manner as to leave a smooth end at right angles to the axis of the pipe.

B. Each length of pipe, fitting or valve shall be firmly supported for its entire length upon original undisturbed trench bottom. Permanent blocking will not be permitted. Where temporary blocking is used, it shall be removed. The underside of the pipe, fittings or valve shall be completely filled and thoroughly compacted with bank gravel before refilling trenches. Fittings and valves shall be carefully set in the line, plumb and true to grade and thoroughly compacted to a firm and uniform bearing.

3.03 JOINTING

A. Jointing shall be in strict accordance with the manufacturer’s recommendation for the

type of joint being made. Jointing of pipe or fittings shall be made only by persons thoroughly skilled in this work.

3.04 ROUGHING-IN FOR WATER METERS

A. Rough-in piping and specialties for water-meter installation according to utility company's written instructions and requirements.

3.05 BACKFLOW PREVENTER, METERS AND RELATED APPURTENANCES

A. The installation of all new backflow preventer and meter and related valves, strainers, hangers, straps, clamps and other appurtenances shall be accomplished in a safe, and complete manner by licensed plumbers.

B. All work in this regard shall be completed in compliance with City of Waltham standards and industry requirements and to the satisfaction of the project representatives.

3.06 CONDUCTING TEST FOR LEAKAGE

A. Description

1. Test for leakage shall be conducted on all portions of completed water work. In trenches, the testing shall be conducted with partial backfilling over the barrel of the pipe, but all joints between the pipe, fittings and valves shall be left exposed for the duration of the tests. At the Engineer's direction, temporary backfilling of certain portions of the completed work may be required prior to conducting leakage tests.

2. All air shall be released and the mains completely filled with water, and after allowing twenty-four (24) hours for absorption, the internal pressure shall be built up to an equivalent hydrostatic head of three hundred-fifty (350) feet of water of one hundred-fifty (150) pounds per square inch, and so maintained for the full period of tests.

3. All visible leaks in the joints shall be stopped, and any cracks or defective pipe, fitting or valve shall be removed and replaced.

4. The test shall be conducted for a period of at least sixty (60) minutes after all visible leaks have been stopped, and the inflow of water from a force pump to maintain the required pressure shall not exceed seventy (70) gallons per inch of internal diameter per mile of pipe per day.

5. In case the specified rate of leakage is exceeded, the leaks shall be found and repaired, and the mains shall be re-tested until the required conditions are met.

3.07 DISINFECTION OF NEW MAINS

A. Upon completion, all water mains shall be disinfected as follows:

1. Pipes shall be completely filled with water; all air released, and then thoroughly

flushed out in the amount twice the capacity of the section to be treated. A disinfecting solution of sodium hypochlorite shall be introduced into the main near the point of water supply, in the concentration of one hundred (100) parts of available chlorine per million parts of water. The main shall then be washed or bled from the extreme end opposite to the point of application of the disinfecting supply, and the washing continued until tests indicate the disinfecting solution has reached the end opposite to the point of application in the concentration of not less than fifty (50) parts available chlorine.

2. All gates shall then be closed, and the disinfecting solution left in the mains under full pressure for a period of not less than forty-eight (48) hours. The entire section shall then be repeatedly and thoroughly flushed out until all traces of chemicals are removed.

3. Samples of water shall then be taken by the Contractor and laboratory analysis made by him to determine the effectiveness of treatment.

4. Any main or section of pipe failing to meet laboratory standards for disinfecting shall be repeatedly treated until the desired results are obtained. A COPY OF LABORATORY REPORTS SHALL BE PROVIDED TO THE OWNER BY THE CONTRACTOR WITHIN FIVE (5) DAYS AFTER TESTING IS COMPLETED.

5. Particular attention is directed to the requirement that a double check valve installation shall be made in the water supply to the main under treatment, to prevent possible backflow or siphonage of treated solution into the distribution system in service.

3.08 OTHER DATA

A. All iron castings shall conform to the latest revisions of ASTM Designation A126 for physical and chemical requirements.

B. All ironwork shall be thoroughly cleaned and painted with two coats of asphaltum or other varnish or paint that the Engineer may approve. After the valves are assembled and tested, a third coat shall be applied to the exterior. All composition tool-finished work shall be left bright and unpainted.

C. All connections shall be made permanently watertight.

D. All other work required to complete the improvements listed in the Contract Documents shall be accomplished in accordance with the requirements of the City of Waltham.

END OF SECTION

SECTION 02670

BACKFLOW PREVENTER CABINET

PART 1 - GENERAL

1.01 GENERAL PROVISIONS

A. All of the Contract Documents, including the Contract Form, General Provisions, General Conditions, Supplemental Conditions, and all Attachments to the General Provisions, and Division 1 - General Requirements, apply to the work of this Section.

B. Examine and coordinate all Contract Drawings and other sections of the specifications for requirements which affect work of this section whether or not such work is specifically mentioned in this section. Coordinate work with other trades to assure the steady progress of all work under the Contract. The Contractor shall refer to the Contract Documents for all new work and coordinate how it relates to the installation of backflow preventer cabinets

1.02 SCOPE OF WORK

A. Provide equipment and materials, and do all work necessary to furnish and install one (1) Backflow Preventer Cabinet complete in place on a concrete pad as indicated on the Drawings and as specified.

B. Service lines, internal cabinet features and other related water work shall be accomplished in accordance with the applicable sections of these Specifications.

1.03 RELATED WORK

A. Section 02100 - Site Preparation and Demolition.
B. Section 02200 - Earthwork.
C. Section 02667 - Water Service Systems.
D. Section 02810 - Irrigation System
E. Section 15400 - Fountain

1.04 REFERENCE STANDARDS AND SPECIFICATIONS

A. Reference to specific standards, specifications and tests of the following technical societies, organizations, and governmental bodies may be made in the contract documents.

B. AASHTO - American Association of State Highway and Transportation Officials (tests or specifications). AASHTO or AASHO

C. ASTM - American Society for Testing and Materials.

D. Mass. Standard Specs. - Latest edition of the Standard Specifications for Highways,

Bridges and Waterways, 1988 Edition, the Commonwealth of Massachusetts, Department of Public Works, hereinafter referred to as "the Massachusetts Standard Specifications."

E. AWWA - American Waterworks Association.

1.05 SHOP DRAWINGS/MANUFACTURER'S CUTS AND SPECIFICATIONS

A. The Contractor shall submit to the Landscape Architect for approval six (6) copies of all materials and equipment proposed for use indicating manufacturers' names and addresses, identifying data and expected delivery dates. No consideration will be given to partial lists submitted from time to time. Intention of using specified materials and equipment shall not relieve the Contractor from submitting the above list, nor shall submission of the list relieve him from submission of shop drawings. Any item of material or of equipment not submitted for approval on the list will not be approved unless of the exact make and characteristics specified.

B. If the material or equipment is installed before it is approved, the Contractor shall be liable for the removal and replacement at no extra charge to the Owner, if, in the opinion of the Landscape Architect, the material or equipment does not meet the intent of the Contract Documents.

C. The Contractor shall submit the following information with all equipment shop drawings:

1. Manufacturer's certified scale drawings, cuts or catalogs, including installation details.

2. Manufacturer's specifications, including certified performance characteristics and capacity ratings, if applicable.

PART 2 - MATERIALS

2.01 BACKFLOW PREVENTER CABINET

A. The backflow preventer cabinet shall be a standard manufactured item or custom built, conforming to the Contract details and requirements herein. Local sources manufacturers of cabinets are Mass Electrical Apparatus, 42 Oakville Street, Lynn, MA 01905, phone 781-592-0410, fax 781-592-0986 or approved equal.

1. Material: 0.125 5052-H32 Aluminum.
2. Subpanel: 12 gauge steel painted white.
3. Hinge: Stainless steel continuous.
4. Main Door: Stainless steel drop handle with 3 point latching and padlock ready.
5. Welding: All seams are continuous weld ground smooth.
6. Door: Gasketed with 1/4" x 1" closed cell neoprene gasket PSA one side to obtain a weather tight seal.
7. Finish: Smooth black powder coat inside and out.

2.02 CEMENT CONCRETE

A. Forms, reinforcing, and cement concrete cast in place for the backflow preventer cabinet shall conform to Section 03300 - Cast-in-Place Concrete of these Specifications.

PART 3 - EXECUTION

3.01 INSTALLATION

A. Include all necessary transportation, shipping and handling as necessary to properly and completely install the specified cabinets.

3.02 CONCRETE BASE

A. Install concrete base as indicated on the Drawings. The concrete base shall be six inches larger than the specified cabinet, all around, and pitched at edges for positive drainage.

3.03 TOUCH-UP

A. Any surfaces of the specified cabinets that are chipped or scratched shall be wire brushed, primed and painted or otherwise restored to a flawless condition in a manner that is acceptable to the City Representative.

END OF SECTION

SECTION 02725

DRAINAGE AND SEWER PIPE

PART I - GENERAL

1.01 GENERAL PROVISIONS

A. All of the Contract Documents, including the Contract Form, General Provisions, General Conditions, Supplemental Conditions, and all Attachments to the General Provisions, and Division 1 - General Requirements, apply to the work of this Section.

B. Examine and coordinate all Contract Drawings and other sections of the specifications for requirements which affect work of this section whether or not such work is specifically mentioned in this section. Coordinate work with other trades to assure the steady progress of all work under the Contract. The Contractor shall refer to the Contract Documents for all new work and coordinate how it relates to the installation of drainage and sewer pipe.

1.02 SCOPE OF WORK

A. Under this Section the Contractor shall furnish all materials, equipment, labor, transportation, facilities and all operations and adjustments required for the installation of drainage and/or sewer pipe and all incidentals thereto.

B. Drainage and sewer pipe shall be placed in the sizes and lengths indicated on the plans. Gate valves shall be placed along the drain and sewer pipes at locations as shown on the plans.

C. Provide all coordination and pay all fees associated with installation of the sewer connection.

1.03 RELATED WORK

A. Section 01050 - Field Engineering.
B. Section 01700 - Project Closeout.
C. Section 02100 - Site Preparation and Demolition.
D. Section 02200 - Earthwork.
E. Section 02622 - Field Drainage System.
F. Section 02728 - Drainage Structures.

1.04 REFERENCES

A. The following standards and definitions are applicable to the work of this Section to the extent referenced herein:

1. ASTM A74 Cast Iron Soil Pipe and Fittings.
2. ASTM C76 Reinforced Concrete Culvert, Storm Drain, and Sewer

Pipe

3. ASTM C443 Joints for Circular Concrete Sewer and Culvert Pipe, using Rubber Gaskets.
4. STM D1557 Test Methods for Moisture-Density Relations of Soils and Soil-Aggregate Mixtures using 10 lb. (4.54 kg) Rammer and 18 inch (457 mm) Drop.
5. ASTM D2729 Poly(Vinyl Chloride) (PVC) Sewer Pipe and Fittings.
6. ASTM D1248 HDPE(High Density Polyethylene)(HDPE) Pipe and Fittings.
7. ASTM F2648 Test Methods for Non-Pressure (gravity flow) polyethylene (PE) pipes and fittings.

1.05 SHOP DRAWINGS/MANUFACTURER'S CUTS AND SPECIFICATIONS

A. The Contractor shall submit to the Landscape Architect for approval six (6) copies of all materials and equipment proposed for use indicating manufacturers' names and addresses, identifying data and expected delivery dates. No consideration will be given to partial lists submitted from time to time. Intention of using specified materials and equipment shall not relieve the Contractor from submitting the above list, nor shall submission of the list relieve him from submission of shop drawings. Any item of material or of equipment not submitted for approval on the list will not be approved unless of the exact make and characteristics specified.

B. If the material or equipment is installed before it is approved, the Contractor shall be liable for the removal and replacement at no extra charge to the Owner, if, in the opinion of the Landscape Architect, the material or equipment does not meet the intent of the Contract Documents.

C. The Contractor shall submit the following information with all equipment shop drawings:

1. Manufacturer's certified scale drawings, cuts or catalogs, including installation details.

2. Manufacturer's specifications, including certified performance characteristics and capacity ratings.

D. Product Data: The Contractor shall provide data indicating pipe and pipe accessories, connections, etc.

1.06 SAMPLES

A. The Contractor shall submit all samples as requested in accordance with the provisions of the General Conditions. Samples accepted will be returned to the Contractor within five (5) days and may be incorporated into the work. Samples not accepted will be returned for disposition by the Contractor.

B. One (1) square foot of filter fabric.

1.07 CODES, ORDINANCES AND PERMITS

A. All work shall be performed in strict accordance with local and state codes and regulations including OSHA Construction Regulations Title 29 CFR Part 1926.

B. Site utilities work shall be done in strict accordance with the Commonwealth of Massachusetts State Plumbing Code, latest edition, and all revisions thereto, and City of Waltham Engineering Department and Department of Public Works standards.

C. Any material or workmanship called for in the above-mentioned requirements, which are not specified or shown on the drawings, shall be furnished and installed by the Contractor as though same has been specifically mentioned or indicated. If the drawings and specifications are at variance with any regulations, the bidder shall notify the Landscape Architect ten (10) days before the date for submitting his bid. In many cases the drawings are in excess of the requirements in the codes and these shall be followed to the fullest. If the Contractor fails to notify the Landscape Architect at this time and installs work in variance with the above-mentioned codes and regulations, he shall assume the responsibility and the expense to rectify the installation.

D. Before commencing work, the Contractor shall obtain all permits necessary in connection with the installation of this equipment and pay fees required for same. He shall include the cost and back charge of installing any portion of the work where performed by municipal departments or utility companies.

1.08 SUBSTITUTIONS

A. Any reference to a particular device, product, material, article or system shall be interpreted as establishing a standard of quality, design, performance, or function, and shall not be construed as limiting competition.

1.09 RECORD DRAWINGS

A. The Contractor shall submit record drawings as specified in Section 01700 - Project Closeout.

1.10 SITE VISITATION

A. It is recommended that all prospective bidders visit the job site to acquaint themselves with the general and special conditions that may be encountered which will have a bearing on labor, transportation, cutting and patching, material handling and storage, and similar items, during the prosecution of the work. Failure to do so shall not relieve him of his responsibility for properly estimating the difficulties involved in the work to be performed under this section.

1.11 REFERENCE STANDARDS

A. References herein to any technical society, organization, group or body is made in accordance with the following abbreviations.

B. ASTM - American Society for Testing Materials.

C. AASHTO - American Association of State Highway and Transportation Officials.

D. AWWA - American Water Works Association.

E. ANSI - American National Standards Institute.

F. MHD Standard Specifications: The Commonwealth of Massachusetts Highway Department, Standard Specifications for Highways and Bridges, 1988.

G. Requirements of the City of Waltham Engineering Department and Department of Public Works.

1.12 MATERIALS AND WORKMANSHIP

A. It is the intent of these specifications to establish quality standards for all material and equipment incorporated in the work of this section. All material and equipment installed hereunder shall be new and shall be the best of each respective kind and type. Proper care shall be exercised in handling all equipment and materials herein specified.

B. The installation shall be as indicated on the drawings and in accordance with the manufacturer's recommendations as approved by the Landscape Architect. The installation shall be accomplished by workmen skilled in this type of work.

C. All conduits, pipes, structures, etc. in use and which are damaged during excavation, whether uncovered or not and whether or not they are shown on the plans, shall be repaired at the expense of the Contractor.

D. Storage of materials by the Contractor for incorporation into the work shall be off the site for other than material that is scheduled to be installed in the time span of two (2) working days. The storage site selected by the Contractor shall be made accessible to the City inspection forces at all times during normal working hours.

PART 2 - MATERIALS

2.01 GENERAL

A. Drawings and specifications are intended to supplement and explain each other. Materials not specifically mentioned in the specifications shall be as indicated on the drawings. Where conflicts occur between the drawings or specifications, or within either document itself, the item or arrangement of better quality, greater quantity or higher cost shall be included in the Contractor's bid. Where no specific kind or quality of material is given, a first-class standard article, shall be furnished.

2.02 DRAINAGE AND SEWER PIPE

A. PVC Pipe for use as storm drainage and sewer lines shall contain integrally belled and spigot type rubber gasketed joints conforming to ASTM 3034. Gaskets shall conform to ASTM F-477 and shall be marked to indicate nominal pipe size and proper insertion direction. The standard dimension ratio (SDR) of all pipe and fittings shall not exceed 35. Standard pipe lengths shall be twenty (20) feet unless otherwise approved. All necessary glues, gaskets and fittings shall be furnished in order to make the work complete and acceptable to the Engineer.

B. HDPE Pipe shall be ADS N–12 high density polyethylene pipe (HDPE) as manufactured by Advanced Drainage Systems (ADS), or approved equal, and shall conform to the requirements of AASHTO M-294, and ASTM F2648.

1. HDPE pipe shall be smooth wall perforated where indicated.

2. Pipe and fittings shall be made of polyethylene compounds which conform to the physical requirements of Type III, Category 3, 4 or 5, P23, P33, or P34, Class C per ASTM D-1248 with the applicable requirements defined in ASTM D-1248. Clean reworked material may be used.

3. Pipe shall be of the diameters shown on the Drawings.

C. HDPE Fittings shall conform to:

1. Fittings shall conform to ASTM F 2306. Bell and spigot connections shall utilize a spun-on or welded bell and valley or saddle gasket meeting the watertight performance of requirements of ASTM F 2306.

2. Couplers and pipe shall be from the same manufacturer.

3. Couplers shall be corrugated to match the pipe corrugations and the width shall not be less than one-half the nominal diameter of the pipe. Split couplers shall be manufactured to engage an equal number of corrugations on each side of the pipe joint.

4. One half inch diameter galvanized steel bolts and nuts or nylon ties as supplied by manufacturer shall be used on coupling bands.

D. Furnish pipe in the sizes indicated on the plans and/or details.

2.03 FILTER FABRIC

A. SUPAC 8NP by Phillips Fibers Corporation, AMOCO 4508, Trevira 1125, Mirafi 180N, or equal.

2.04 BEDDING AND COVER MATERIALS

A. Crushed Stone Bedding: Crushed stone as specified in Section 02200 - Earthwork.

B. Cover: Gravel as specified in Section 02200 - Earthwork.

2.05 APPURTENANCES

A. Provide all appurtenance and incidentals necessary to make the sewer and drainage pipe installation and connection complete and acceptable, including all materials necessary for the excavation, backfill, and compaction.

PART 3 - EXECUTION

3.01 PIPE INSTALLATION

A. Layout out utilities as required in Section 01050 - Field Engineering. Prior to excavating trenches the Contractor shall field verify all existing inverts and inform the Landscape Architect of any discrepancies. Record these inverts on Record Drawings.

B. The trench for the pipe shall be excavated to the required line and grade and be of sufficient width to permit thorough tamping of the fill material under the haunches and around the pipe. Soft or unsuitable material encountered below the normal bedding line of the pipe shall be removed as directed, replaced with selected material, gravel or crushed stone and thoroughly compacted. The bottom of the trench shall be shaped to conform to the curvature of the pipe. This bed shall also be excavated to accommodate the bells of pipes.

C. The pipe shall be laid true to the specified lines and grades where shown on the Plans and as directed. The bell end shall be toward rising grade and each section of pipe shall have a firm bearing throughout its length. Material placed around and under the pipe shall be free of stones larger than three (3) inches in diameter.

D. No load greater than three (3) tons shall be moved over any pipe until a fully-compacted backfill of at least two (2) feet has been placed over the top of the pipe. This minimum will be increased to three and one-half (3-1/2) feet for a forty thousand (40,000) pound single wheel load and to four (4) feet for a sixty thousand (60,000) pound single wheel load. However, compliance with these requirements is not to be construed as relieving the Contractor of any responsibility concerning damage to the pipe.

E. Bedding material for pipes shall conform to the requirements of Section 02200 - Earthwork and shall be placed between the pipe and the walls of the trench in layers not exceeding six (6) inches in depth and thoroughly compacted. Each layer, if dry, shall be moistened and then compacted by rolling or by tamping with mechanical rammers. Compaction with iron hand tampers having a tamping face not exceeding twenty-five (25) square inches in area may be allowed only after permission has been given by the Landscape Architect. Special care shall be taken to thoroughly compact the fill under the haunches of the pipe. This method of filling and compacting shall be continued until the material is level with the centerline of the pipe. The remainder of the filling shall consist of suitable backfill material, as defined in Section 02200 - Earthwork, placed in successive layers not more than six (6) inches in depth. Each layer shall be thoroughly compacted in accordance with AASHTO-T99 Standard Proctor Test.

3.02 DRAINAGE AND SEWER PIPE

A. Any pipe showing settlement after laying or which is not in true alignment or is otherwise unsatisfactory before final acceptance of the work shall be taken up and replaced or relayed by the Contractor without additional compensation..

3.03 WATER REMOVAL

A. If water is encountered during construction, provisions must be made to remove the water by sheeting and pumping as required, or laying the pipe with a crushed stone bed so that the laying of pipe and other work can be done under stable conditions, all in accordance with Section 2.04 of these Specifications.

END OF SECTION

SECTION 02728

DRAINAGE STRUCTURES

PART 1 - GENERAL

1.01 GENERAL PROVISIONS

A. All of the Contract Documents, including the Contract Form, General Provisions, General Conditions, Supplemental Conditions, and all Attachments to the General Provisions, and Division 1 - General Requirements, apply to the work of this Section.

B. Specifications for requirements which affect work of this section whether or not such work is specifically mentioned in this section. Coordinate work with other trades to assure the steady progress of all work under the Contract. The Contractor shall refer to the Contract Documents for all new work and coordinate how it relates to the installation of drainage and sewer pipe.

1.02 SCOPE OF WORK

A. The work to be done under this Section shall include the furnishing and installation of a drainage system consisting of catchbasins, slot drain, manholes, and storm water recharge chambers as indicated on the Drawings and as specified. The Contractor shall provide all material, labor, tools, equipment and transportation to complete these items.

1.03 RELATED WORK

A. Section 02100 - Site Preparation and Demolition.
B. Section 02200 - Earthwork.
C. Section 02725 - Drainage Pipe.
D. Section 03300 - Cast-in-Place Concrete.

1.04 REFERENCE STANDARDS AND SPECIFICATIONS

A. Reference to the standards, specifications and tests of technical societies, organizations and governmental bodies is made in the Contract Documents.

B. AASHTO - American Association of State Highway and Transportation Officials (tests or specifications).

C. ASTM - American Society for Testing and Materials.

D. MHD Standard Specifications: Mass. Standard Specs. - Standard Specifications for Highways, Bridges and Waterways, 1988 Edition, the Commonwealth of Massachusetts, Department of Public Works.

E. Commonwealth of Massachusetts, Department of Public Works, Construction

Standards, 1977.

F. Municipal Standard Specifications and Procedures, as applicable.

G. OSHA Construction Regulations Title 29 CFR Part 1926.

H. Americans with Disabilities Act Accessibility Guidelines (ADAAG).

1.05 CODES, ORDINANCES AND PERMITS

A. All work shall be performed in strict accordance with local and state codes and regulations.

B. Site utilities work shall be done in strict accordance with the Commonwealth of Massachusetts State Plumbing Code, dated September 1976, and all revisions thereto.

C. The Contractor shall secure all permits deemed necessary in connection with the installation of this equipment and pay fees required for same. He shall include the cost and back-charge of installing any portion of the work where performed by municipal departments or utility companies.

1.06 SUBMITTALS / SHOP DRAWINGS

A. Shop drawings shall be submitted to the Engineer for all equipment. Six (6) copies shall be submitted and shall include cuts, scale drawings, installation details, manufacturer's specifications, certified performance characteristics and capacity ratings.

B. No material or equipment may be purchased or installed prior to the submission and written approval of the shop drawings.

C. Product Data: Provide data indicating, catch basins, frames and grates, etc.

D. One (1) square foot of filter fabric.

PART 2 - MATERIALS

2.01 CEMENT CONCRETE

A. Material shall comply with Section 03300 of these Specifications.

2.02 PRECAST CONCRETE DRAINAGE STRUCTURES

A. All precast concrete units shall conform to Section M4.02.14 of the Standard Specifications in all aspects, and to the City of Waltham Standard Details for Drainage Structures as applicable.

B. Refer to the Details in the Contract Drawings.

2.03 CASTINGS

A. Iron castings for Catch Basins & Manholes (frames, grates and covers) shall conform to Mass Highway Construction Manual standard designs and to the requirements of AASHTO Designation M105, Class No. 30, Gray Iron Castings, unless otherwise specified. Test Bar B, 1.20 inches in diameter.

1. Catch basin frame and grate casting(s) shall be 24" round grate conforming to ADA requirements.

2. Manhole Frames and Covers: Cover shall be of minimum weight of 150 pounds, HD20 loading, solid cover, with a pick-hole, with water tight top flange complying with the requirements of the City of Waltham Engineering Department.

2.04 STORM WATER RECHARGE CHAMBERS

A. Recharge units and accessories shall consist of high molecular weight/high density polyethylene material. The chambers and all accessories shall be suitable for AASHTO HS20-44 loading. The units shall be manufactured in accordance with AASHTO M-294. Joints and fittings shall conform to AASHTO M-252. Shop Drawings and Design Details shall be submitted to the Engineer for review.

B. Stormwater Retention System Filter Aggregate (Bedding): Shall consist of crushed stone that is hard, durable stone, free from clay, loam, or deleterious material. The material shall consist of 1-1/2" stone. Gradation shall conform to Section M2.01.1 of the "Standard Specification".

C. Provide clean-out structures as shown on the Drawings.

2.05 FILTER FABRIC

A. SUPAC 8NP by Phillips Fibers Corporation, AMOCO 4508, Trevira 1125, Mirafi 180N, or equal

2.06 SLOT DRAIN

A. Slot drain shall be as manufactured by SportEdge or approved equal.

1. Drain Channel shall be fabricated of polymer concrete and schedule 40 PVC pipe, 8 inch ID with radius non-sloping bottom conforming to the following:

a. ½" maximum polymer concrete drainage slot with interlocking ends, with polymer concrete reinforcing at 6"± intervals.

b. Joint coupler: 8" PVC slip coupler, 3.75 inch minimum width.

c. Channel length: 2 meter Slot drain cover shall be polymer concrete, ½"

maximum slot, removable.

2. Slot opening shall be ½" maximum

3. Accessories: Slot drain PVV 8" end cup when required for straight runs.

PART 3 - EXECUTION

3.01 Structures of various types and depths shall be constructed to the line and grades, dimensions and design shown on the plans and as directed with the necessary frames, gratings, covers, aluminum steps, etc., and in accordance with these Specifications after verification of inverts of utilities to remain.

3.02 The bricks and blocks (if required) shall be wetted as necessary before laying. All joints in brick masonry shall be thoroughly flushed full of mortar and no joints on the inside face shall be greater than one-quarter (1/4) inch. After the bricks and blocks are laid up, the outside of the structure shall be plastered with one-half (½) inch thick mortar coat.

3.03 Connections will be carefully made to all existing and proposed lines to the grades and elevations shown on the contract drawing.

3.04 All catch basins shall have a cast iron hinged metal hood trap installed over the outlet pipe or an oil trap outlet as detailed in the drawings. Use twelve (12) inch hoods, unless sizes equal to the specified pipe sizes are available.

3.05 Unless otherwise directed or specified, two (2) weep holes shall be built into the walls of all new structures. Each weep hole shall consist of a section of four (4) inch pipe or equivalent opening to carry water through the wall of the structure. The outside end of the pipe or opening shall be covered with a one-quarter (1/4) inch mesh galvanized wire screen 23 gauge satisfactorily fastened against the wall. The drain to the weep hole shall be excavated and back-filled with two (2) cubic feet of broken rock or crushed stone. The crushed stone shall be placed against and over the end of the pipe or opening with a section of filter cloth to prevent the entrance of fine material. Only one (1) type of weep hole shall be used consistently throughout the project.

3.06 Suitable materials obtained from the excavation or from borrow shall be placed between the outside of the structure and the limits of the excavation, uniformly distributed in successive layers not exceeding six (6) inches in depth and thoroughly compacted by tamping with mechanical rammers or tampers. When required, the backfill material shall be moistened during the compacting. Compaction with iron hand tampers having a tamping face not exceeding twenty-five (25) square inches may be allowed, but only after permission has been given by the Engineer.

3.07 All materials removed in the excavation for catch basins, manholes, or storm water recharge units and remaining after the filling about the finished structure has been made shall be used wherever possible within the project or removed and satisfactorily disposed of outside of the project limits without additional compensation.

3.08 The embedded ends of the aluminum ladder steps shall be painted with zinc chromate or

bitumastic, and allowed to completely dry before they are installed. Installation shall be as shown on the plans.

3.09 Frame castings for structures shall be set in full mortar beds true to the lines and grades as directed.

3.10 Where directed, the castings shall be temporarily set at such grades as to provide drainage during the construction.

3.11 In general, all methods for installation of the catch basin and manhole units, brick adjustments and mortaring, and installation of frames, grates and covers, shall conform to Section 201 of the "Standard Specifications".

3.12 Installation of Slot Drain:

A. Install per manufacturer's instructions and as indicated on the plans.

3.13 Installation of Storm Water Recharge Units:

A. Form bottom of excavation clean and smooth to correct elevation.

B. Stormwater recharge chambers shall be installed as per manufacturers requirements and guidelines, and as shown on drawings.

C. Establish elevations and pipe inverts for inlets and outlets as indicated.

END OF SECTION

SECTION 02805

BENCHES & PICNIC TABLES

PART 1- GENERAL

1.01 GENERAL PROVISIONS

A. All of the Contract Documents, including the Contract Form, General Provisions, General Conditions, Supplemental Conditions, and all Attachments to the General Provisions, and Division 1 - General Requirements, apply to the work of this Section.

1.02 SCOPE OF WORK

A. Work under this Section shall include all labor, materials, services, equipment, transportation and accessories and the performance of all operations necessary to complete the work of this Section, and as indicated on the Drawings and as specified.

B. The work shall include, but is not limited to, the following:

1. Benches (Curved Steel Bench, Recycled Plastic Benches with Back, Backless Benches)
2. Recycled Plastic Picnic Tables

1.03 RELATED SECTIONS

A. Section 02200 – Earthwork
B. Section 02510 – Bituminous Concrete Paving
C. Section 02515 – Precast Pavers
D. Section 03300 – Cast-in-Place Concrete

1.04 SUBMITTALS

A. Concrete mix design for footings.
B. Manufacturer's literature demonstrating compliance with these Specifications.
C. Manufacturer's installation instructions.
D. Color charts of manufacturer's standard color choices.
E. Manufacturer's written warranties.
F. Maintenance instructions, including recommended methods for repairing damage & abrasions to the powder coat finish.

1.05 REFERENCE STANDARDS

A. All work shall comply with the minimum standards of the latest editions of the following codes and specifications, subject to modifications and amendments outlined herein:
1. Americans with Disabilities Act Accessibility Guidelines (ADAAG

2. Massachusetts Architectural Access Board Regulations, CMR 521 (MAAB)

1.06 DELIVERY, STORAGE AND HANDLING

A. Deliver, store, and handle metal fabrication items to prevent damage and deterioration. Store assembled items off the ground.

1.07 EXAMINATION OF SITE AND DOCUMENTS

A. The Contractor shall inform him/herself of existing conditions of the site before submitting his/her bid and shall be fully responsible for carrying out all required site work to fully and properly execute the work of the Contract.

PART 2 – PRODUCTS

2.01 RECYCLED PLASTIC SITE FURNITURE

A. Recycled Plastic lumber shall be composed of a minimum of 90% high density polyethylene (HDPE), all of which shall be derived from recycled material.

B. Recycled plastic shall have a ten-year warranty against structural failure, splitting, cracking, or splintering during that period.

2.02 FINISH FOR STEEL FRAMES, SUPPORTS AND STEEL BENCHES

A. Finish for steel frames for benches and picnic tables shall be powder-coating equivalent to the following:

1. All parts shall be processed through an 8-stage phosphorous wash system.
2. Parts shall be coated with zinc-rich epoxy primer to an average of 4-5mils.
3. Parts shall be finished with a top coat of TGIC-polyester powder to an average of 4-5 mils.
4. Powder-coat shall be cured with infrared and convection heat for approximately 20 minutes.
5. Finished parts shall comply with the following ASTM Standards for coating and coating method: ASTM-D-523, ASTM-D-3363, ASTM-D-1737, ASTM-D-3359, ASTM-D-2794, ASTM-B-117 and ASTM-D-3451.

2.03 RECYCLED PLASTIC BACKLESS BENCHES

A. Backless benches shall be Dumor Model 163 or equal product conforming to the following:

1. Supports shall be 3” x 3” x ¼” wall ASTM A500 steel tubing, 3/8” x 4-1/2” ASTM A36 carbon steel flat bar and ½” x 3” ASTM A36 carbon steel flat bar.

2. Seat assembly shall be slats manufactured from 2” x 3” and 3” x 4” nominal HDPE recycled plastic slats.

3. Seat brace shall be manufactured from 1” (1 5/16” OD) ASTM A500 Schedule 40 steel tubing and 3/16” thick ASTM A36 steel plate.

4. Expansion anchors shall be stainless steel.

2.04 RECYCLED PLASTIC BENCHES WITH BACKS

A. Recycled plastic benches with backs shall be Dumor Model 88 or equal product conforming to the following:

1. Benches shall be dimensioned as shown on the drawings.
2. Provide surface mounted option.
3. Supports shall be 3/8” x 4-1/2” ASTM A36 carbon steel flat bar and 3” x 3” x ¼” wall ASTM A500 steel tubing.
4. Seat slats shall be manufactured from 3” x 6” and 3” x 4” nominal HDPE recycled plastic slats.
5. Top and bottom slats shall be “bull-nose” profile.
6. Expansion anchors shall be stainless steel.

2.05 RECYCLED PLASTIC PICNIC TABLES

A. Picnic tables shall be sized as shown on the Drawings and shall be Dumor Model 100 series or equal conforming to the following:

1. Table and seat support shall be 3” x 3” x ¼” wall ASTM A500 steel tubing and ½” x 3” ASTM A36 carbon steel flat bar.
2. Table top assembly shall be 1” (1 5/16 OD) ASTM A500 Schedule 40 steel tubing, 3/16” thick ASTM A36 steel plate, 3” x 4” and 3” x 6” nominal HDPE recycled plastic slats.
3. Seat assembly shall be 1” (1 5/16” OD) ASTM A500 Schedule 40 steel tubing, 3/16” thick ASTM A36 steel plate, 3” x 4” and 3” xx 6” nominal HDPE recycled plastic slats.
4. Anchors shall be stainless steel expansion bolts.

2.06 CURVED STEEL BENCH

A. Bench shall be Dumor Model RI93-120-6 or equal conforming to the following:

1. Materials: End supports shall be ASTM A48 Class 30 cast iron.

2. Seat Assembly:

a. Radius shall be a shown on the Drawings.

b. Seat straps shall be manufactured from 1/4” x 1 1/2” ASTM A36 carbon steel flat bar.

c. Support pipes shall be manufactured from 2” (2 3/8” OD)ASTM A513 schedule 40 steel tubing.

d. Anchoring: Stainless steel expansion anchors sized as detailed in the Drawings.

3. Finish: Powder coat, with all parts processed through an 8-stage iron phosphorous wash system, coated with a zinc-rich epoxy primer to an average of 4-5 mils, and finished with a top coat of TGIC-polyester powder to an average of 4-5 mils. .

PART 3 - EXECUTION

3.01 GENERAL REQUIREMENTS

A. Site improvements shall be installed in accordance with the Drawings and approved Shop Drawings. Site improvements shall be installed in a level, plumb condition, true to the lines and grades shown on plans.

B. Shim bolt connections as necessary and secure bolts. Exposed bolts shall be fastened with an approved semi-permanent adhesive to protect against vandalism.

C. Install site furniture level and plumb, true to line and grade, and at height shown on the Drawings and recommended by the manufacturer. Where necessary provide shims to level.

D. Field touch-up all abraded or scratched surfaces with manufacturer’s recommended paint and/or cold galvanizing materials.

3.02 CONCRETE FOOTINGS

A. Cast-in-place concrete footings for site improvements shall be conform to the requirements of Section 03300 - Cast-in-place Concrete and shall be 4,000 psi minimum strength at 28 days.

B. Compacted gravel backfill shall conform to the requirements of Section 02200 - Earthwork.

END OF SECTION

SECTION 02810

BICYCLE RACKS

PART 1 - GENERAL

1.01 GENERAL

A. Attention is directed to the General Conditions of the Contract, all Divisions of the Specifications and the Contract Drawings, all of which apply to this Section.

1.02 DESCRIPTION OF WORK

A. Work under this Section shall include all labor, materials, services, equipment, transportation and accessories and the performance of all operations necessary to complete the work of this Section, as indicated on the Contract Drawings and/or as specified herein and includes but is not limited to the following:

1. Loop Bicycle Racks on Concrete Pad

B. Related Work

1. Section 03300 - Cast-in-Place Concrete

1.03 SUBMITTALS

A. Submit the following in accordance with the requirements of Article V. 2 of the General Conditions and Section 01 33 00 Submittal Procedures:

1. Manufacturer's literature demonstrating compliance with the Specifications for recycled wood, steel supports, and steel finishes

2. Manufacturer's standard color choices for steel finishes

1.04 DELIVERY, STORAGE AND HANDLING

A. Deliver, store, and handle metal fabrication items to prevent damage and deterioration.

B. Store assembled items off the ground.

1.05 REFERENCE STANDARDS

A. Work shall comply with the minimum standards of the latest editions of the following codes and specifications, subject to modifications and amendments outlined herein.

1. American Institute of Steel Construction, (AISC).
2. American Welding Society, (AWS)
3. American Society for Testing and Materials, (ASTM).
4. National Association of Architectural Metal Manufacturers, (NAAMM).

PART 2 - MATERIALS

2.01 PRODUCTS

A. Bicycle Racks shall be one of the following models or equal:

1. Dumor Series 83, local representative M.E. O'Brien & Sons, Medfield, MA, Tel:508-359-4200

2. Heavy Duty Hoop Rack" as manufactured by Dero Bike Rack Company, Minneapolis, MN, Tel 612-359-0689,

3. Madrax Challenger Plus Bike Rack, Madrax, Inc. Middleton, WI Tel: 800-448-7931

B. Racks shall conform to the following:

1. Pipe for loop shall be 2" schedule 40 minimum.

2. Finish for steel loop shall be TGIC UV resistant powder coat of no less than 6 mils thickness.

a) Prior to application of powder coat, steel shall have been prepared for painting by hard sandblasting, and then coated with an epoxy primer electrostatically applied. .

b) Color shall be chosen by the Owner from manufacturer's standard colors.

PART 3 - EXECUTION

3.01 INSTALLATION

A. Bicycle Racks shall be fabricated and fastened in accordance with the Drawings and approved Shop Drawings.

B. Surface mount rack into concrete pad.

C. Install level and plumb, true to the lines and grades shown on the Drawings.

D. Shim bolt connections as necessary and secure bolts. The Contractor shall render all connections vandal-proof by a method approved by the Project Engineer.

E. Field touch-up abraded or scratched surfaces with manufacturer's recommended cold-galvanizing material and paint.

END OF SECTION

SECTION 02810

IRRIGATION SYSTEM

PART 1 - GENERAL

1.01 GENERAL REQUIREMENTS

A. All of the Contract Documents, including the Contract Form, General Provisions, General Conditions, Supplemental Conditions, and all Attachments to the General Provisions, and Division 1 - General Requirements, apply to the work of this Section.

B. Coordinate work of this Section with other underground utilities and with trades responsible for their installation. Refer to respective Drawings pertaining to other work.

1.02 SCOPE OF WORK

A. The irrigation system shown on the Drawings and described within these Specifications represents a new controller, turf and landscape irrigation system supplied from municipal water. The system is designed for 50 gallons per minute. Minimum 75-psi dynamic pressure at full system flow is required from the irrigation contractor's point of connection.

B. Work to be done includes furnishing all labor, materials, equipment and services required to complete all irrigation work indicated on the Drawings, as specified herein, or both.

C. The mechanical point of connection for the irrigation system piping, generally where shown on the drawings.

D. The electrical point of connection for the irrigation system shall be to a new controller to be located in the new electrical enclosure as shown on the drawings.

E. The Drawings and Specifications must be interpreted and are intended to complement each other. The Contractor shall furnish and install all parts, which may be required by the Drawings and omitted by the Specifications, or vice versa, just as though required by both. Should there appear to be discrepancies or question of intent, the Contractor shall refer the matter to the Owner's Representative for decision, and his interpretation shall be final, conclusive and binding.

F. Changes to the Drawings necessary to avoid any obstacles shall be made by the Contractor with the approval of the Owner's Representative.

G. Trench excavation, back filling and bedding materials, together with the testing of the completed installation shall be included in this work.

H. The work shall be constructed and finished in every workmanlike and substantial manner, to the full intent Drawings and Specifications. All parts necessary for the respect in a good. and meaning of the proper and complete execution of the work, whether the same may have been specifically mentioned or not, or indicated on the Drawings, shall be done or furnished in a manner corresponding with the rest of the work as if the same were specifically herein described.

I. Record Drawing as well as Operating & Maintenance Manual generation, in accordance to these specifications shall also be included in this work.

1.03 RELATED WORK

A. Carefully examine all of the Contract Documents for requirements that affect the Work of this Section.

1. Section 02200 - Earthwork.

2. Section 02510 - Bituminous Concrete Paving.

3. Section 02725 - Drainage and Sewer Pipe.

4. Section 02780 - Unit Pavers.

5. Section 02930 - Sodded Lawn.

6. Section 03300 - Cast-In-Place Concrete

1.04 ORDINANCES, PERMITS AND FEES

A. The Work under this Section shall comply with all ordinances and regulations of authorities having jurisdiction.

B. The Contractor shall obtain and pay for any and all permits, tests and certifications required for the execution of Work under this Section.

C. Furnish copies of Permits, Certifications and Approval Notices to the Owner's

Representative prior to requesting payment.

D. The Contractor shall include in their bid any charges by the Water Department, Utility Company, or other authorities for work done by them and charged to the Contractor.

1.05 EXAMINATION OF CONDITIONS

A. The Contractor shall fully inform himself of existing conditions on the site before submitting his bid, and shall be fully responsible for carrying out all work required to fully and properly execute the work of the Contract, regardless of the conditions encountered in the actual Work. No claim for extra compensation or extension of time will be allowed on account of actual conditions inconsistent with those assumed, except those conditions described in the GENERAL CONDITIONS.

1.06 QUALITY ASSURANCE

A. Installer: A firm which has at least five (5) years experience in work of the type and size 'required by this Section and which is acceptable to the Owner's Representative.

B. References: The Contractor must supply three references for work of this type and size with their bid including names and phone numbers of contact person(s).

C. Applicable requirements of accepted Standards and Codes shall apply to the Work of this Section and shall be so labeled or listed:

1.	ASTM D P1784	Rigid Poly (Vinyl Chloride) (PVC) Compounds and Chlorinated Poly (Vinyl Chloride) (CPVC) Compounds.
2.	ASTM D 1785	Poly (Vinyl Chloride) (PVC) Plastic Pipe, Schedules 40, 80, and C1200.
3.	ASTM D P2464	Threaded Poly (Vinyl Chloride) (PVC) Plastic Pipe Fittings, Schedule 80.
4.	ASTM D 2466	Poly (Vinyl Chloride) (PVC) Plastic Pipe Fittings, Schedule 40.
5.	ASTM D 2564	Solvent Cements for Poly (Vinyl Chloride) (PVC) Plastic Piping Systems..

6. ASTM D P2737-99 Polyethylene (PE) Pressure rated tube.

7. National Plumbing Code (NPC)

8. National Electric Code (NEC)

9. National Sanitary Foundation (NSF)

10. American Society of Agricultural Engineers (ASAE)

11. Underwriters Laboratories, Inc. (UL)

12. Occupational Safety and Health Regulations (OSHA)

1.07 TESTS

A. Observation: The Owner's Representative will be on site at various times to insure the system is being installed according to the Specifications and Drawings.

B. Coverage Test: After completion of the system, test the operation of entire system and adjust sprinklers as directed by the Owner's Representative. Demonstrate to the Owner's Representative that all irrigated areas are being adequately covered. Furnish and install materials required to correct inadequacies of coverage due to deviations from the Drawings or where the system has been willfully installed when it is obviously inadequate or inappropriate without bringing it to the attention of the Owner. See Part 3 - Execution.

C. The Owner's Representative shall be notified 48 hours in advance for observations.

D. During final observation, the contractor shall be responsible for having two-way communication and sufficient personnel to provide instantaneous communication between the observation area and the controller for the system.

1.08 SHOP DRAWINGS

A. The Contractor shall provide copies of product specification sheets on all proposed equipment to be installed to the Owner's Representative for approval prior to the start of work, in accordance with the parameters of Division-i. Work on the irrigation system may not commence until product sheets are submitted and approved. Submittals shall be marked up to show proper nozzles, sizes, flows, etc. Equipment to be included:

1. Sprinkler Heads, Spray Heads.

2. Valves: Manual and Automatic.

3. Valve Boxes.

4. Pipe and Fittings.

5. Wire and Connectors.

6. Automatic Controller.

7. Quick Coupling Valves.

8. Miscellaneous Materials.

B. Project Record Documents:

1. The Contractor shall provide and keep up-to-date a complete redlined Record Set of Drawings of the system as the project proceeds. Drawings shall be corrected daily, showing every change from the original Drawings and Specifications. Record Drawings shall specify and exactly locate sprinkler type; pop up height and nozzle for each sprinkler installed. Each valve box location to be referenced by distance from a minimum of two permanent locations. Controller(s), rain sensor(s), quick coupling valves, water meters, back flow prevention device and all other equipment shall be indicated on the drawings. All wire routing, wire size and splices shall be indicated. Main line pipe and wire route shall have two (2) distinctly different graphic symbols (line types). Prints for this purpose may be obtained from Owner's Representative at cost. This redlined record set of drawings shall be kept at job site and shall be used only as a record set.

2. This redlined set of documents shall also serve as work progress sheets and shall be the basis for measurement and payment for work completed. This record set of drawings shall be available at all times for observation and shall be kept in a location designated by Owner's Representative. Should this record set of drawings not be available for review or not be up-to-date at the time of the observation, it will be assumed no work has been completed. Provide copies of the redlined record set of drawings for Owner's Representative review on a monthly basis.

3. Make neat and legible notations on this record set of drawings daily as the work proceeds, showing the work as actually installed. For example, should a piece of equipment be installed in a location that does not match the plan, indicate that equipment in a graphic manner in the location of installation and so as to match the original symbols as indicated in the irrigation legend. Should the equipment be different from that specified, indicate with a new graphic symbol both on the drawings and the irrigation legend. The relocated equipment dimensions and northing and easting coordinates should then be transferred to the appropriate drawing in this record set of drawings at the proper time.

4. On or before the date of final field observation, deliver corrected and completed AutoCAD computer plots of "record drawings" on vellum and AutoCAD electronic files on disk to Owner's Representative as part of contract closeout. Delivery of plots will not relieve Contractor of the responsibility of furnishing required information that may have been omitted from the prints.

C. At the end of each segment of the project the contractor shall submit the following to the Owner's Representative.

1. Plumbing permits: If none required, so state.

2. Material approvals.

3. Pressure line tests: By whom approved and date.

4. Materials furnished: Recipient and date.

1.09 DELIVERY, STORAGE AND HANDLING

A. Store and handle all materials in compliance with manufacturer instructions and recommendations. Protect from all possible damage. Minimize on-site storage.

1.10 GUARANTEE

A. The Contractor shall obtain in the Owner's name the standard written manufacturer's guarantee of all materials furnished under this Section where such guarantees are offered in the manufacturer's published product data. All these guarantees shall be in addition to, and not in lieu of, other liabilities that the Contractor may have by law.

B. In addition to the manufacturers guarantees the Contractor shall warrant the

entire irrigation system, both parts and labor for a period of one (1) year from the date of acceptance by the Owner.

C. As part of the one-year warranty the Contractor shall perform the first year-end winterization and spring start-up for the irrigation system.

D. Should any problems develop within the warranty period because of inferior or faulty materials or workmanship, they shall be corrected to the satisfaction of the Owner's Representative at no additional expense to the Owner.

E. A written warranty showing date of completion and period of warranty shall be supplied upon completion of each segment of the project.

1.11 COORDINATION

A. The Contractor shall at all times coordinate his work closely with the Owner's Representative to avoid misunderstandings and to efficiently bring the project to completion. The Owner's Representative shall be notified as to the start of work, progression and completion, as well as any changes to the drawings before the change is made. The Contractor shall also coordinate his work with that of his sub-contractors.

B. The Contractor shall be held responsible for and shall pay for all damage to other work caused by his work, workmen or sub-contractors. Repairing of such damage shall be done by the Contractor who installed the work, as directed by the Owner's Representative.

1.12 MAINTENANCE AND OPERATING INSTRUCTIONS

A. Contractor shall include in their Bid an allowance for four (4) hours of instruction of Owner and/or Owner's personnel upon completion of check/test/start-up/adjust operations by a competent operator (The Owner's Representative office shall be notified at least one (1) week in advance of check/test/start-up/adjust operations).

B. Upon completion of work and prior to application for acceptance and final payment, a minimum of three (3) three ring, hard cover binders titled "MAINTENANCE AND OPERATING INSTRUCTIONS FOR THE CEDARWOOD PLAYGROUND IRRIGATION SYSTEM", shall be submitted to the Owner's Representative office. After review and approval, the copies will be forwarded to the Owner. Included in the Maintenance and Operating binders shall be:

1. Table of Contents
2. Written description of Irrigation System.

3. System drawings:
    a. One (1) copy of the original irrigation plan;
    b. One (1) copy of the Record Drawing;
    c. One (1) reproducible of the Record Drawing;
    d. One (1) copy of the controller valve system wiring diagram
4. Listing of Manufacturers.
5. Manufacturers' data where multiple model, type and size listings are included; clearly and conspicuously indicating those that are pertinent to this installation.
    a. "APPROVED" submittals of all irrigation equipment.
    b. Operation.
    c. Maintenance: including complete troubleshooting charts.
    d. Parts list.
    e. Names, addresses and telephone numbers of recommended repair and service companies. A copy of the suggested "System Operating Schedule" which shall call out the controller program required (zone run time in minutes per day and days per week) in order to provide the desired amount of water to each area under ''no-rain'' conditions.
6. Winterization and spring start-up procedures.
7. Guarantee data.

1.13 PROCEDURE

A. Notify all city departments and/or public utility owners concerned, of the time and location of any work that may affect them. Cooperate and coordinate with them in the protection and/or repairs of any utilities.

B. Provide and install temporary support, adequate protection and maintenance of all structures, drains, sewers, and other obstructions encountered. Where grade or alignment is obstructed, the obstruction shall be permanently supported, relocated, removed or reconstructed as directed by the Architect.

PART 2 - PRODUCTS

2.01 GENERAL

A. All materials to be incorporated in this system shall be new and without flaws or defects and of quality and performance as specified and meeting the requirements of the system. All material overages at the completion of the installation are the property of the Contractor and shall be removed from the site.

B. No material substitutions from the irrigation products described in these

specifications and shown on the drawings shall be made without prior approval and acceptance from the Owner's Representative.

2.02 PE IRRIGATION PIPE

A. Irrigation pipes shall be polyethylene (PE3408) pipe, SIDR 15, Class 100, Type III, Grade 3, Class C conforming to ASTM P2239, with a minimum pressure rating of 100 psi as manufactured by Oil Creek or equal. Polyethylene pipe shall only be used in landscape areas.

2.03 POLYETHYLENE IRRIGATION FITTINGS

A. Fillings for polyethylene pipe shall be insert PVC or Nylon type fittings. Fittings shall conform to NSF standards and be attached with two (2) dog-eared stainless steel clamps. Clamps shall be as manufactured by Oetiker or approved equal.

B. Supply only pipes and fittings that are marked by the manufacturer with the appropriate ASTM designations and pressure ratings and are free from cracks, wrinkles, blisters, dents or other damage. Fittings shall be per ASTM P2609 as manufactured by Dura, Lasco or approved equal.

2.04 PVC PIPE FOR SLEEVES

A. All pipe shall bear the following markings: Manufacturer's name, nominal pipe size, schedule or class, pressure rating in psi, and date of extrusion.

B. All PVC Schedule 80 pipe shall be manufactured from a Type I, Grade I Polyvinyl Chloride (PVC) compound with a Cell Classification of 12454 per ASTM D1784. The pipe shall be manufactured in strict compliance to ASTM D1785, consistently meeting and/or exceeding the Quality Assurance test requirements of this standard with regard to material, workmanship, burst pressure, flattening, and extrusion quality. Standard lengths of pipe sizes 6" and larger shall be beveled each end by the pipe manufacturer. All pipe shall be stored indoors after production at the manufacturing site until shipped from factory. This pipe shall carry the National Sanitation Foundation (NSF) seal of approval for potable water applications.

C. Sleeves for PE irrigation pipe shall be two times pipe diameter minimum.

2.05 GEAR DRIVEN SPRINKLERS

A. The sprinkler shall be Hunter Industries Incorporated I-20 gear-driven, rotary type, capable of covering a 17 foot to 46 foot radius at 50 PSI with a discharge rate of 0.36 to 14.8 GPM. The sprinkler shall be available with thirty four (34) nozzles discharging 0.36 GPM to 14.8 GPM. The sprinkler shall have radius adjustment capabilities by means of a stainless-steel nozzle retainer/radius adjustment screw.

B. The sprinkler shall be both full-circle and adjustable part-circle operation in a single unit. The sprinkler shall be minutely adjustable from 50° to 360°. It shall be adjustable in all phases of installation (i.e., before installation, after installation while static, and after installation while in operation). The sprinkler shall be equipped with a self-adjusting stator to ensure constant rotation speed regardless of nozzle installed.

C. The sprinkler shall have a non-strippable drive mechanism that allows the nozzle turret to be turned during operation, without damage. It shall also have an automatic arc return feature that returns the nozzle turret to its proper orientation if it is turned outside its intended arc of coverage.

D. The sprinkler shall be equipped with a drain check valve to prevent low head drainage, and be capable of checking up to 15 feet (4.5 m) in elevation change. The sprinkler shall have a minimum of 4 inch (10.16 cm) pop-up stroke to bring the rotating nozzle turret into a clean environment. The sprinkler shall have a rubber cover firmly attached to the top of the riser. When specified, the sprinkler shall have a cover molded of purple Alcryn rubber to indicate the use of reclaimed water. The rubber cover shall be surrounded by a protective rubber boot when sprinkler is in the retracted position.

E. The sprinkler shall have an exposed surface diameter after installation of 2 inches (5 cm) and have an overall height of 7-7/8 inches (20 cm). The unit shall have a 1-inch Female National Pipe Thread (FNPT) inlet. When specified, the unit shall have a 1-inch Female British Standard Pipe Thread inlet.

F. The sprinkler shall be serviceable after installation by unscrewing the body cap, removing the riser assembly, and extracting the inlet filter screen. The sprinkler shall have an optional turf-cup kit that, once installed, provides the means to grow living turf on top of the sprinkler riser.

G. The body of the sprinkler shall be constructed of corrosion resistant, impact resistant, heavy-duty A.B.S. It shall have a stainless steel riser and spring for positive retraction of the riser when irrigation is complete. The riser and nozzle-turret assembly shall be encased in stainless steel. The sprinkler shall carry a five-year, exchange warranty (not prorated).

2.06 STREAM SPRAY SPRINKLERS

A. The sprinkler shall be Hunter Industries Incorporated Pro-Spray PSR 30 Spray Sprinkler, capable of matched precipitation rate of 8 foot to 17 foot radius at 30 PSI. The sprinkler shall have radius adjustment capabilities, adjustable from 0 degrees to 360 degrees by means of a stainless-steel nozzle retainer/radius adjustment screw.

B. The sprinkler shall be available with a 4-, 6-, or 12-inch (10-, 15-, or 30-cm) pop-up stroke, depending on the body specified, to bring the nozzle into a clean environment. The sprinkler shall be available as an aboveground shrub head. The sprinkler shall have the option of either a factory-installed or field-installed drain check valve capable of checking up to 10 feet (3.0 m) in elevation change. When specified as factory-installed, the sprinkler shall have the words "CHECK VALVE" stamped in white lettering on the

body cap. The sprinkler shall have available an optional, snap-on cap, molded in purple alcryn rubber, or a replacement body cap, molded in purple to indicate the use of reclaimed water. A vandal-resistant locking cap shall be available as a field-installed option.

C. The sprinkler shall have a standard pressure-regulating device as an integral part of the pop-up riser. This regulator will prevent fogging or misting of the nozzle spray pattern by maintaining a constant nozzle outlet pressure of 30 PSI with inlet pressures of up to 100 PSI, regardless of the nozzle installed.

D. The body of the sprinkler shall be constructed of corrosion and UV-resistant, heavy-duty A.B.S. The riser of the sprinkler shall be constructed of abrasion and UV-resistant A.B.S. and shall be adjustable for pattern alignment. The riser shall be compatible with female threaded nozzles and shall have a stainless steel spring for positive retraction when irrigation is complete.

E. The sprinkler shall have a pressure-activated, multi-function, UV stable wiper seal that will clean debris from the pop-up stem while it retracts. The seal shall be molded around a rigid plastic ring to prevent seal deformation. This seal shall prevent the sprinkler from sticking in the up position and be capable of sealing the sprinkler riser stem to the sprinkler cap under normal operating pressures. The seal shall be removable from the cap for easy service and shall be replaceable.

F. The sprinkler shall have a factory-installed, removable flush cap with a pull-up tab that shall prevent debris from entering the sprinkler during installation and allow the system to be flushed before installing the nozzle. The flush cap shall have a directional flushing action that allows the water to escape only in one direction. The flush cap shall open as the stem extends and completely close when the stem is in the retracted position.

G. The sprinkler shall have an exposed surface diameter after installation of 2-1/4 inches (6 cm). In addition, the 6-inch (15 cm) and 12-inch (30 cm) sprinklers shall be available with a 1/2-inch FNPT side inlet. When specified with a factory-installed check valve, the 6-inch (15 cm) and 12-inch (30 cm) sprinklers will be supplied without the side inlet.

H. The sprinkler shall carry a five-year, exchange warranty (not prorated).

2.07 ELECTRIC CONTROL VALVES

A. Electric control valves shall be one-inch remote control, diaphragm type, fiberglass or reinforced nylon body plastic valves with manual flow control, manual bleed screw and 200 psi pressure rating.

B. Valves shall be manufactured by Rain Bird model PEB, Hunter Industries model ICV or approved equal.

2.08 VALVE BOXES

A. All valve boxes shall be manufactured from unformed resin with a tensile strength of

3,100-5,500 psi conforming to ASTM P63 8. All boxes shall be green in color. Covers shall be green in color unless otherwise specified.

B. Valve boxes for single valves, isolation valves and quick coupling valves shall be 10-inch round valve boxes with metal detection and bolt down covers.

C. Valve boxes for dual electric valves shall be 12-inch standard valve boxes with metal detection and bolt down covers. When multiple electric valves arc installed in the same area, they are to be installed two (2) valves per box in a 12-inch standard box.

D. Valve box extensions shall be provided and installed as required for proper box depth. Valve box extensions shall be made by the same manufacturer.

E. Valve boxes shall be manufactured by Armor, Carson Specification Grade or approved equal.

2.10 QUICK COUPLING VALVES

A. The valve body shall be of cast brass construction with a working pressure of 125 psi. The valve seat disc plunger body shall be spring loaded so that the valve is normally closed under all conditions when the key is not inserted.

B. The top of the valve body receiving the key shall be equipped with ACME threads and smooth face to allow the key to open and close the valve slowly. The quick coupling valve shall be equipped with a vinyl cover.

C. The valve body construction shall be such that the coupler seal washer may be removed from the top for cleaning or replacement without disassembling any other parts of the valve.

D. Keys shall be ACME with 1-inch male thread and 3/4-inch female thread at the top.

E. Contractor shall provide two (3) keys for quick couplers and two (3) 1-inch x 3/4-inch swivel hose ells.

F. Quick coupling valves, keys and swivels shall be manufactured by Hunter Industries, model HQ-44RC-AW, HK-44 and HS-1 or approved equal.

2.11 AUTOMATIC CONTROL SYSTEM

A. I-CORE Controller:

1. The controller shall be of a modular design with a standard 6-station model. The controller shall be expandable with either 6-station modules or a 48 station decoder output module.

2. The decoder output module shall occupy no more than 3 expansion slots, and may coexist with up to (2) 6-station modules in the plastic enclosure, or (4)

6-station modules in the metal enclosure.

3. The removable station modules shall allow servicing of, and removing of the module(s) without removing field wires from the controller.

4. The controller shall have four independent programs (A, B, C, and D) with 8 start times per program for programs A, B, and C; and 16 start times for program D for a total of up to 40 daily start times. Any two programs shall have the capability of running concurrently. Watering times shall be available from 1 minute to 12 hours in 1-minute increments per station. There shall be a programmable delay between stations available of up to 9 hours. The controller shall have 4 weekly schedule options to choose from: 7-day calendar, 31-day calendar, odd day programming and even day programming. It shall also have a 365-day calendar clock to accommodate true odd-even watering. Operation shall be available in automatic, semi-automatic and manual modes. All programming shall be accomplished by use of a programming dial and selection buttons with user feedback provided by a backlit LCD display. The front panel of the controller shall be removable and capable of being programmed when not attached to the controller cabinet.

5. The controller shall be equipped with a rain sensor on-off switch that allows the user to override a sensor that has suspended watering. The controller shall have a programmable rain delay that turns off the controller for a predetermined period of time, from 1 to 180 days.

6. The controller shall have a cycle and soak scheduling capability by station that allows a cycle to be programmed for up to 60 minutes and a soak period to be programmed for up to 120 minutes.

7. The controller shall have a seasonal adjustment feature with 3 different modes that allows station run times to be altered from 0% to 300% by program to compensate for weather changes. The modes shall include a Global Adjust, Monthly Adjust, and a Solar Sync Adjust. The Global Adjust shall increase the station run times in a given program by a fixed percentage. The Monthly Adjust shall allow all the seasonal adjustment values for the full year to be programmed into the controller, for each program. The Solar Sync Adjust shall allow the seasonal adjustment values to occur on a daily basis when a Hunter Solar sync is connected to the controller.

8. The controller shall be capable of monitoring up to two Clik-type sensors or flow sensors in the plastic configuration, and up to three Clik-type sensors or flow sensors in the metal configuration.

9. The controller shall permit connection of a flow meter which is calibrated by the operator for the pipe diameter in which it is installed. The flow meter shall measure actual flow in gallons or liters. The controller shall have a learning mode in which the controller operates each single station for a short period, learns the actual flow for each station, and stores the information internally by

station.

10. When the learned flow is exceeded during normal operations the controller shall record a flow alarm event, cease irrigating the station or stations contributing to the high or low flow readings, and resume irrigation with any stations which do not cause alarms. The controller shall have the ability to determine high or low flow conditions when multiple stations are operating, and shall perform diagnostics to identify stations which contribute to the problem flow. Allowable limits and duration of incorrect flow shall be preset, but reprogrammable by the operator for unique local conditions. The flow meter shall be a Hunter Industries HFS in an appropriately sized FCT fitting. . It shall also be possible to except certain stations from flow monitoring devices. The controller shall also be equipped with a flow-totalizing function that will provide a running total of all the gallons or liters of water used between two reference dates.

11. Automatic programs shall have user-programmed Non-Water windows to except certain time windows from watering, regardless of the water day schedule.

12. Automatic programs shall also permit the designation of non-water days, even when Odd/Even or Interval Day patterns have been set. Non-water window violations shall be detected and the operator shall be alerted when an irrigation program would have run during a non-water window.

13. The controller shall also save an Easy Retrieve Program which stores all original programming settings. The installing contractor shall be able to restore the system to this saved state at any time after initial installation. The stored Easy Retrieve settings may also be updated at any time by the operator.

14. The controller shall have a one-button manual station advance in Test mode for quick diagnostics checks.

15. The controller shall be equipped with a programmable pump start/master valve circuit that can activate the pump start relay by zone. It shall also have a programmable delay between valve stations. Delays between stations shall be programmable up to a maximum of 10 hours.

16. Transformer input shall be 120/240 VAC, 50/60Hz. Transformer output shall be 24 VAC, 1.5A (40VA). All AC power wiring connections shall be made in an internal junction box. Maximum output per conventional station shall be 24 VAC, 0.56A. Program backup shall be provided by a non-volatile memory circuit that will hold the program information indefinitely. The controller shall have Metal Oxide Varistors (MOVs) on the AC power input portion and the secondary output portion to help protect the micro-circuitry from power surges. The secondary MOVs shall be enclosed in the station modules for easy servicing. There shall be self-diagnostic, electronic short circuit protection that detects a faulty circuit, continues watering the remainder of the program, and reports the

faulty station on the display. The diagnostic procedure shall also be capable of being initiated by the user manually. The controller shall provide backup timekeeping in the event of a power outage with the use of an internal long-life lithium battery.

17. The controller shall have a diagnostic feature that provides a visual indication via LED lights that show the current status of sensor activity, station activity and flow activity. Any station or flow alarms shall be report on the LCD display.

18. The controller shall have the option of 3 different enclosures; wall-mounted plastic cabinet, powder coated steel wall-mounted cabinet, and a full plastic pedestal. The steel cabinet shall also be available with a matching pedestal. The pedestal versions shall have the option of a Pedestal Wiring Board (PWB) that allows connection of the field wiring in the pedestal. Additionally, the PWB shall be equipped with MOVs that help protect the secondary output portion of the controller.

19. The controller shall have as an option, the ROAM or ICR remote control package that enables remote operation of the controller. Connection of remotes to the controller shall be provided through factory-installed SmartPort® outlet.

20. The controller shall have a multi-language capability that allows programming of the display in 6 different languages: English, French, Spanish, German, Italian, and Portuguese. It shall also be capable of setting the units of measure to either English (GPM) or Metric (LPM).

21. The controller shall be installed in accordance with the manufacturer's published instructions. The controller shall carry a conditional five year exchange warranty. The automatic controller(s) shall be the IC series controller as manufactured for Hunter Industries Incorporated, San Marcos, California or approved equal.

2.02 I-Core Decoder Specifications:

A. Decoder Output Module:

1. The decoder output module shall include its own user interface dedicated to decoder programming and diagnostics, including a backlit LCD display and navigational buttons. The decoder output module shall fit into 3 of the slots that accommodate conventional station output modules. The decoder output module shall co-exist with conventional station output modules, so that a hybrid system of conventional solenoid wiring and two-wire decoder wiring is possible in the same controller.

2. The decoder output module shall include a Programming Port for field programming of decoder station addresses via the decoder wires. Decoder programming shall not require the use of serial numbers or external devices.

3. The decoder output module shall offer 3 separate two-wire paths to the field. Up to 48 decoder stations may be on any one path, or dispersed over 2 or 3 paths.

4. The decoder output module shall display active stations by number, and shall also be able to display current draw in milliamps on the two-wire paths at any time, without disruption to running irrigation. The decoder output module shall detect and display Line Open and Line Fault conditions on the two wire path.

5. The decoder output module shall use a current sensing logic to determine whether active stations are drawing sufficient current and shall provide alarm notification when either an underdraw or overdraw situation is detected.

6. The decoder output module shall provide a solenoid finder feature, which chatters a solenoid loudly, for location purposes.

B. Decoders:

1. The decoders shall be completely waterproof. Each decoder shall have a single red and a single blue wire, for connection to the color-coded two-wire path. Each decoder shall include 2 waterproof connectors, UL listed to 600V direct burial, to insure proper connection.

2. The decoders shall be available in a single-station configuration, and a two-station configuration. The individual station outputs shall also be color-coded to insure proper connection.

3. Each decoder station output shall be capable of activating a minimum of 2 typical 24VAC irrigation solenoids. Individual solenoid specifications should be referenced for any difficulties with decoder operations (such as solenoids containing extra components for surge protection).

4. Decoders shall be installed within 100 ft/30 m of the solenoids they are intended to operate. In high lightning areas, the use of webbed wire pairs for decoder-to-solenoid connections is highly recommended.

5. All decoder installations shall be made in appropriately sized valve boxes. At each decoder splice, approximately 5 ft/1.5 m of wire slack shall be provided, looped inside each valve box, to prevent strain on the connection over time.

6. The system shall accommodate up to 48 decoder stations in any combination of single or two-station decoders.

7. All decoder stations shall be compatible with license-free wireless remote control.

C. Surge Protection:

1. Surge suppression devices designed for use with the decoder system shall be installed at a minimum of every 1000 ft/300 m or every 12 decoder modules, whichever is first. A surge suppression module must be installed at the end of each two-wire path.

2. The surge suppression device shall be completely waterproof, and shall include two of each color-coded wire leads, to match the two-wire path.

3. When the surge suppression device is installed in-line, one red/blue pair shall be connected to the wire path on the controller side of the device, and another red/blue pair shall be connected on the field side, continuing the decoder wiring path. When the surge suppression device is installed at the end of the two-wire path, the two red leads shall be joined together with the red wire on the path. The two blue leads shall also be joined together with the blue wire on the two-wire path, so that no leads are left un-terminated.

4. All surge suppression device installations shall be made in appropriately sized valve boxes. At each decoder splice, approximately 5 ft/1.5 m of wire slack shall be provided, looped inside each valve box, to prevent strain on the connection over time.

5. Earth ground hardware shall not be located in the same valve box as the surge suppression devices.

6. Each surge suppression device shall have a single bare copper earth ground lead, for connection to earth grounding hardware. The lead shall be routed at right angles to the two wire path, a minimum of 8 ft/2.5 m away from the two-wire path, and connected to a copper-clad steel ground rod or copper plate of 4"/100 mm width and 36"/1 m length. Nominal resistance of this earth ground connection shall be approximately 10 Ohms or less, and ground-enhancement materials may be required to achieve this.

D. Decoder Wiring:

1. Each two-wire path shall consist of approved decoder cable for this specific system. The wire shall consist of two twisted solid-core copper wires, color-coded red and blue, within a polyethylene jacket for solar and cut protection. Wire conductors shall be 14AWG /2mm2 for distances up to 5000 ft/1500 m, or 12AWG/3.3mm2 for distances up to 7500 ft/2300 m.

2. All splices made within the two-wire path shall be made with UL-listed waterproof connections rated to 600V direct burial with a robust strain relief. All splices in the wire path shall be made in valve boxes, with a minimum of 5 ft/1.5 m slack in each valve box. All decoders and surge suppression devices shall include the minimum number of such connectors in the box from the manufacturer to insure proper connection.

3. The controller shall be of a fixed-station design that is provided and shall have

24 stations. It shall have a UL listed, NEMA 3R rated cabinet for use in the outdoor models. The front panel of the controller shall be removable to allow for remote programming.

2.12 CONTROLLER GROUNDING EQUIPMENT

A. Grounding shall be as shown on the drawings, and as Specified in Section 16100 Electrical Service Systems.

2.13 RAIN SHUT OFF-WIRELESS RAIN-CLICK

A. Rain shut-off shall be plastic in construction with adjustable interruption point and attached mounting bracket. Rain shut-off shall be wireless Rain-Clik as manufactured by Hunter Industries or equal.

B. One rain sensor shall be supplied for each controller. Install the receiver unit next to the irrigation controller, with the transmitter anywhere that the device can receive representative rainfall.

C. Mount unit within 300' from the receiver unit with built in bypass switch on received panel.

D. Sensor Dimensions: 3.25" diameter x 4" high; Wiring: normally closed or normally open; Operational Temperature: 32^0F - 1 30^0F; Receiver Power: 22-28 VAC/VDC, 100 mA (from timer transformer); Switching capabilities: Single Pole Double throw - 24 volts 3 amps.

2.14 WIRE

A. All valve control wire shall be minimum #14-awg, common #12-awg, single strand, solid copper, UL- approved direct burial AWG-U.F. 600V and shall meet all state and local codes for this service. Individual wires must be used for each zone valve. Common wire shall be white in color, control wire shall be red in color. White color shall be used for common wire only.

B. In ground wire connections shall be UL listed, manufactured by 3M, model DBY6 splice kits. All wire splices shall be made in valve boxes, at controller, or at valves.

C. Wire type and method of installation shall be in accordance with local codes for NEC Class II circuits of 30-volt A.C. or less.

2.15 ISOLATION VALVES

A. Isolation valves 2-1/2 inches and smaller in size shall be gate type, of bronze construction, US Manufacture, 200 WOG with steel cross handle and 200 psi rating. Gate valves to be as manufactured by Nibco, model T- 113-K, or approved equal.

2.16 SWING JOINTS

A. Gear driven rotary sprinklers shall be installed on pre-assembled swing joints, minimum length 12 inches, maximum 18 inches.

B. Standard configuration has swivel ells on both ends for maximum versatility.

C. Pressure rated to 150 PSI.

D. Quick coupling valves to be installed on 1-inch prefabricated PVC unitized swing joint assemblies with double 0-ring seals, minimum 315 psi rating and minimum length of 12 inches with brass insert and stabilizer (unless stabilizer is an integral part of the quick coupling valve).

2.17 CRUSHED STONE

A. Crushed stone shall be as specified in Section - 02200 Earthwork. Crushed stone shall be used under valve boxes.

2.18 SAND

A. Sand used for backfilling of trenches; under, around and over PVC lines shall be aas specified in Section 02200 - Earthwork.

2.19 SPARE PARTS

A. Contractor shall supply the following tools and equipment to the Owner's Representative before final observation:

1. Two (2) wrenches for disassembling and adjusting each type of sprinkler head provided.
2. Four (4) quick coupler key assemblies with HS-O Hose Swivel Adaptor.
3. One (1) of each type of gate valve used in the project.
4. Two (2) of each type sprinkler head and pattern (PC & FC) used in the project.
5. Two (2) of each type nozzle used in the project.

B. Before final observation can occur, written evidence that the Owner's Representative has received the tools and equipment must be shown to the Owner.

PART 3 - EXECUTION

3.01 GENERAL

A. Before work is commenced, hold a conference with the Owner's Representative to discuss general details of the work.

B. Examine all contract documents applying to this Section noting any discrepancies and bringing the same to the attention of the Owner's Representative for timely resolution.

C. All work indicated on Drawings shall be provided whether or not specifically mentioned in the Specifications.

D. If there are ambiguities between Drawings and Specifications, and specific interpretation or clarification is not issued prior to bidding, the interpretation or clarification will be made only by Owner's Representative, and Contractor shall comply with the decisions. In the event the installation contradicts the directions given, the installation shall be corrected by Contractor at no additional cost to Owner.

E. Verify dimensions and grades at job site before work is commenced. Do not proceed with installation of the landscape irrigation system when it is apparent that obstructions or grade differences exist or if conflicts in construction details. Legend or specific notes are discovered. All such obstructions, conflicts, or discrepancies shall be brought to the attention of the Owner's Representative.

F. Make all field measurements necessary for the work noting the relationship of the irrigation work to the other trades. Coordinate with other trades (landscaping and other site work trades). Project shall be laid out essentially as indicated on the Irrigation Plans, making minor adjustments for variations in the planting arrangement. Major changes shall be reviewed with the Owner's Representative prior to proceeding.

G. Layout of sprinkler lines indicated on Drawings is diagrammatic only. Location of sprinkler equipment is contingent upon and subject to integration with all other underground utilities. Contractor shall employ all data contained in the Contract Documents and shall verify this information at the construction site to confirm the manner by which it relates to the installation.

H. Coordinate installation of all sprinkler materials, including pipe, to avoid conflict with the trees, shrubs, or other plantings.

I. During progress of work, a competent superintendent and all assistants necessary shall be on site. All shall be satisfactory to the Owner's Representative. The superintendent shall not be changed, except with the consent of the Owner's Representative, unless that person proves unsatisfactory and ceases to be employed. The superintendent shall represent the Contractor in his absence and all directions given to the superintendent shall be as binding as if given to the Contractor.

J. At all times, protect existing irrigation, landscaping, paving, structures, walls, footings, etc. from damage. Any inadvertent damage to the work of another trade shall be reported at once.

K. Replace, or repair to the satisfaction of the Owner, all existing paving disturbed during course of work. New paving shall be the same type, strength, texture, finish, and be equal in every way to removed paving.

3.02 PIPE AND FITTINGS INSTALLATION

A. Using proper width trencher chain, excavate a straight (vertical) and true trench to a depth of 2-inch of pipe invert elevation.

B. Loam or topsoil encountered within the limits of trench excavation for irrigation mains

and branch lines shall be carefully removed to the lines and depths as shown on the Drawings and stockpiled for subsequent replacement in the upper 6 inches of the trench from which it is excavated. Such removal and replacement of the quantities of loam shall be considered incidental to the irrigation system and no additional compensation will be allowed therefore.

C. Pipe shall be laid on undisturbed trench bottom provided suitable base is available - no rock larger than 1-inch or sharp edges; if not, excavate to 2-inch below pipe invert and provide and install sand base or crushed stone upon which to lay pipe.

D. Back filling shall be accomplished as follows: the first 10-inch of backfill material shall contain no foreign matter and no rock larger than 1-inch in diameter. Carefully place material around pipe and wire and tamp in place. Remainder of backfill shall be laid-up in 6-inch (maximum) lifts and tamped to compaction with mechanical equipment. Compact backfill in trenches to dry density equal to the adjacent undisturbed soil, and conform to adjacent grades without dips, sunken area, humps, or other irregularities. Frozen material shall not be used for backfill

E. Do backfilling when pipe is cool. During hot weather cool pipe by operating the system for a short period, or by backfilling in the early part of the morning before the heat of the day.

F. Do not, under any circumstances, use truck wheels for compacting soil.

G. Where feasible, Owner's Representative may authorize the use of flooding in lieu of tamping.

H. Restore grades and repair damage where settling occurs.

I. Make all solvent-weld joints in strict accordance with manufacturer's recommendations, making certain not to apply an excess of primer or solvent, and wiping off excess solvent from each connection. Allow welded joints at least 15 minutes set-up/curing time before moving or handling. When the temperature is above 80° F, allow connections to set minimum 24 hours before pulling or pressure is applied to the system. When temperature is below 80° F, follow manufacturer's recommendations. Provide and install for expansion and contraction as recommended. Wire shall be laid in same trench as mainline and at pipe invert (see Wire Installation).

J. Mainline pipe shall have minimum 18 inches of COVER (excavate to invert as required by pipe size). Lateral pipe shall have minimum 16 inches of COVER for PVC and 12 inches of cover for Polyethylene (excavate to invert as required by pipe size).

K. Cut plastic pipe with handsaw or pipe-cutting tool, removing all burrs at cut ends. All pipe cuts are to be square and true. Bevel cut end as required to conform to Manufacturer's Specifications.

L. Every precaution shall be taken to prevent foreign material from entering the pipe while it is being placed in the trench. At times, when installation of the piping is not in progress, the open end(s) of the pipe shall be closed by a watertight plug or other

means. All piping, which cannot temporarily be joined, shall be sealed to make as watertight as possible. This provision shall apply during the lunch hour as well as overnight. Pipe not to be installed that day shall not be laid out. Should water enter the trench during or after installation of the piping, no additional piping may be installed or back filled until all water is removed from the trench. Pipe shall not be installed when water is in the trench, when precipitation is occurring, or when the ambient temperature is at 40° F or below. Pipe installed at temperatures below 40° F shall be removed and replaced at no cost to the Owner. PVC pipe shall be snaked in the trench to accommodate for expansion and contraction due to changes in temperature.

M. In installing irrigation pipe the Contractor shall route the pipe as necessary to prevent damage to tree roots. Where trenching must occur near trees, the Contractor shall provide proper root pruning and sealing methods to all roots 1-inch and larger.

N. Maintain 6-inch minimum clearance between sprinkler lines and lines of other trades. Do not install sprinkler lines directly above another line of any kind.

O. Maintain 1-inch minimum between lines which cross at angles of 45 to 90 degrees.

P. Exercise care when excavating, trenching and working near existing utilities.

Q. Throughout the guarantee period it will be the responsibility of the Contractor to refill any trenches that have settled due to incomplete compaction.

R. Pulling of pipe will be allowed provided soil is suitable and specified depth of bury can be maintained.

3.03 ISOLATION VALVE INSTALLATION

A. Install isolation valves per detail where indicated on the Drawings. Install all isolation valves on a level crushed stone base so that they can be easily opened or closed with the appropriate valve wrench. Install specified valve box over each isolation valve.

B. Check and tighten valve bonnet packing before valve box and backfill installation.

3.04 VALVE BOX INSTALLATION

A. Furnish and install a valve access box for each electric valve, quick coupling valve, isolation valve and wire splice.

B. All valve access boxes shall be installed on a minimum 4-inch crushed stone base. Finish elevation of all boxes shall be at grade. All crushed stone to be supplied by the Contractor and installed before valve box. Crushed stone shall not be poured into previously installed valve boxes.

3.05 24 VOLT CONTROL VALVE INSTALLATION

A. Control valves shall be installed on a level crushed stone base. Grade of bases shall be consistent throughout the project so that finish grades fall within the limits of work.

Valves shall be set plumb with adjusting handle and all bolts, screws and wiring accessible through the valve box opening. Valves shall be set in a plumb position with 24-inch minimum maintenance clearance from other equipment.

B. Install at sufficient depth to provide more than 6-inch, nor less than 4-inch cover from top of valve to finish grade.

C. Adjust zone valve operation after installation using flow control device on valve.

3.06 AUTOMATIC CONTROL SYSTEM INSTALLATION

A. Controller Installation:

1. Contractor to install controller in enclosure. Contractor to wire valves into controller and set proper program. Controller to be mounted on panelboard in enclosure.

2. Wire controller to 120-volt electrical supply provided for the controller as indicated on the Drawings.

3. Contractor to install controller in specified enclosure, as shown on the drawings. Contractor to wire valves into controller and set proper program.

4. Keys shall be turned over to the City of Waltham.

B. Control Wiring:

1. Wiring shall be installed along with the main line. Multiple wire bundles shall be cinched together at maximum 12-foot centers using plastic cable cinches and shall be laid beside, and at the same invert as, the irrigation lines. Sufficient slack for expansion and contraction shall be maintained and wiring shall at no point be installed tightly. Provide an additional 8 inches to 12 inches slack at all changes of direction. Wiring in valve boxes shall be a sufficient length to allow the valve solenoid, splice, and all connections to be brought above grade for servicing. This additional slack shall be coiled for neatness in the valve box. Each valve shall have a separate wire back to the controller.

2. Power wire shall be installed in 1000 foot lengths. No splicing shall be allowed on circuits from power source to controller and from controller to controller below 1000 feet of power wire laid. Minimum burial depth shall be 14 inches.

3. Wire shall not be installed directly off the roll. Wire must be first laid out and then installed. Specified depth of burial is to be maintained.

4. All in-ground wire connections shall be waterproofed with 3M DBY-6, DBR-6 or 82-A Scotch Pak splice kits of the appropriate size for the voltage being carried and the wire sizes involved. All splices shall be made in valve boxes (wire runs requiring splices between valve locations shall be provided in splice box--valve box shall be used). Splice locations shall be shown on the Record Drawings.

5. All power wire (1 20v) shall be installed with no in-ground splices. All splices shall be in valve boxes (black covers) or field controllers. Wire splices shall not be in the same valve box with isolation valves and valve covers to be marked "Electrical".

6. All wire shall be laid in trenches and shall be carefully back-filled to avoid any damage to the wire insulation or wire conductors themselves. In areas of unsuitable material, the trench shall have a 2 inches layer of sand or stone dust on the bottom before the wires are laid into the trench and back-filled. The wires shall have a minimum of 12 inches of cover. Wire not to be installed that day shall not be laid out.

7. Control wiring located beneath paved areas shall be installed in a separate schedule 80 PVC sleeve.

8. Wiring shall occupy the same trench and shall be installed along the same route as pressure supply or lateral lines wherever possible to the side of pipeline. Control wires shall be laid loosely in trench without stress or stretching to allow for contraction of wires. Where more than one (1) wire is placed in a trench, the wiring shall be taped together at intervals of ten (10) feet.

9. An expansion curl shall be provided within three(3) feet of each wire connection. Expansion curl shall be of sufficient length at each splice connection at each electric control valve, so that in case of repair, the valve bonnet may be brought to the surface without disconnecting the control wires. An expansion curl shall be provided every 100 feet on runs of more than 100 feet in length. Provide looped slack at valves and changes in direction of 90 degrees.

3.07 CONNECTIONS

A. Connect piping to sprinklers, devices, valves, control valves, specialties, and accessories to provide a fully operational irrigation system as part of this work.

B. Connect water supply to irrigation system.

C. Electrical Connections: Connect to power source, controllers, rain sensor, and automatic control valves to provide a fully operational irrigation system as part of this work.

D. Ground systems according to Section 16100 - Electrical Service Improvements.

3.08 CONTROLLER GROUNDING INSTALLATION

A. Ground controller to bare copper ground wire and grounding rods.

3.09 WIRING INSTALLATION

A. Wiring shall be installed along with the main line. Multiple wire bundles shall be cinched

together at maximum 12-foot centers using plastic cable cinches and shall be laid beside, and at the same invert as, the irrigation lines. Sufficient slack for expansion and contraction shall be maintained and wiring shall at no point be installed tightly. Provide and install an additional 8 inches to 12 inches slack at all changes of direction. Wiring in valve boxes shall be a sufficient length to allow the valve solenoid, splice, and all connections to be brought above grade for servicing. This additional slack shall be coiled for neatness in the valve box. Each valve shall have a separate wire back to the controller.

B. All wire shall be laid in trenches and shall be carefully back-filled to avoid any damage to the wire insulation or wire conductors themselves. In areas of unsuitable material, the trench shall have a 2 inches layer of sand or stone dust on the bottom before the wires are laid into the trench and back-filled. The wires shall have a minimum of 12 inches of cover. Wire not to be installed that day shall not be laid out.

C. An expansion curl shall be provided and installed within 6 inches of each wire connection to a solenoid and at least every 100 feet of wire length on runs more than 100 feet in length. Expansion curls can be formed by wrapping five *(5)* turns of wire around a 1-inch diameter or larger pipe and then withdrawing the pipe.

D. Provide and install a common ground wire of white color. No white color shall be used for power wire. Control wire shall be red.

E. Service wiring in connection with Drawings and local codes for 24-volt service. All in-ground wire connections shall be waterproofed with 3M DBY-6 splice kits. All splices shall be made in valve boxes (wire runs requiring splices between valve locations shall be provided and installed in splice box-valve box shall be used). Splice locations shall be shown on the Record Drawings.

F. Contractor shall provide a complete wiring diagram showing wire routing for the connections between the controller and valves. See section one for the inclusion of wiring diagram in operation and maintenance manuals.

3.10 SPRINKLER INSTALLATION

A. Spray sprinklers, small rotary sprinklers and medium rotary sprinklers shall be installed flush (perpendicular) to grade on swing pipe assemblies, minimum length 6 inches, maximum 18 inches.

B. Sprinklers shall not exceed maximum spacing indicated.

C. Adjust sprinkler zone after installation using flow control device on valve.

3.11 QUICK COUPLING VALVE INSTALLATION

A. Provide and install quick coupling valves where indicated on the Drawings.

B. Quick coupling valves to be mounted on 1-inch prefabricated PVC unitized swing joint assemblies with integral o-rings, minimum length 12 inches with brass insert and

stabilizer as per details.

3.12 CHECK/TEST/START-UP/ADJUST

A. Flushing:

1. After all piping, valves, sprinkler bodies, pipe lines and risers are in place and connected, but prior to installation of sprinkler internals, open the control valves and flush out the system under a full head of water.

2. Sprinkler internals, flush caps and riser nozzles shall be installed only after flushing of the system has been accomplished to the full satisfaction of the Owner's Representative.

3. Contractor shall be responsible for flushing the entire system after installation is complete and will be responsible for any clogged nozzles for thirty (30) days after substantial completion of this portion of the landscape irrigation system.

B. Testing:

1. Leakage test: test all lines for leaks under operating pressure. Repair all leaks and re-test.

2. Coverage test: perform a coverage test in the presence of the Owner's Representative (notify Architect at least seven (7) days in advance of scheduled coverage test). Representative will determine if the water coverage is complete and adequate. Readjust heads and/or head locations as necessary or directed to achieve proper coverage.

3. All testing shall be at the expense of the Contractor.

3.13 CLEANING AND ADJUSTING

A. At the completion of the work, all parts of the installation shall be thoroughly cleaned. All equipment, pipe, valves and fittings shall be cleaned of grease, metal cuttings and sludge which may have accumulated by the operation of the system for testing.

B. Adjust sprinkler heads, valve boxes, and quick coupling valves to grade as required, so that they will not be damaged by mowing operations.

C. Continue sprinkler coverage adjustment as required by settlement, etc., throughout the guarantee period.

D. Each control zone shall be operated for a minimum of *5* minutes and all heads checked for consistency of delivering water. Adjustments shall be made to sprinklers that are not consistent to the point that they match the manufacturer's standards. All sprinklers, valves, timing devices or other mechanical or electrical components, which fail to meet these standards, shall be rejected, replaced and tested until they meet the

manufacturer's standards.

3.14 ACCEPTANCE AND OPERATION BY OWNER

A. Upon completion of the work and acceptance by the Owner, the Contractor shall be responsible for the training of the Owner's Representative(s) in the operation of the system (provide minimum 48 hours written notice in advance of test). The Contractor shall furnish, in addition to the Record Drawings and operational manuals, copies of all available specification sheets and catalog sheets to the Owner's personnel responsible for the operation of the irrigation system. The Contractor shall guarantee all parts and labor for a minimum period of one (1) year from date of acceptance.

B. Conditions for acceptability of work for start of maintenance by Owner issued by Owner or Owner's Representative shall include but not be limited to:

1. Punch list items complete and approved by Owner or Owner's Representative.
2. Landscape irrigation system complete and in place.
3. Record drawings complete.
4. Maintain installation and watering schedules until all conditions noted above have been completed.

3.15 CLEANUP

A. Upon completion of all installation work, Contractor shall remove all leftover materials and equipment from the site in a safe and legal manner.

B. Contractor shall remove all debris resulting from work of this section.

C. Contractor shall regrade, lightly compact, and replant around sprinkler heads where necessary to maintain proper vertical positioning in relation to established grade.

D. Contractor shall fill all depressions and eroded channels with sufficient soil mix to adjust grade to ensure proper drainage. Compact lightly, and replant filled areas in accord with Drawings requirements.

END OF SECTION

SECTION 02815

BIG BELLY KIOSKS

PART 1- GENERAL

1.01 GENERAL PROVISIONS

A. All of the Contract Documents, including the Contract Form, General Provisions, General Conditions, Supplemental Conditions, and all Attachments to the General Provisions, and Division 1 - General Requirements, apply to the work of this Section.

1.02 SCOPE OF WORK

A. Work under this Section shall include all labor, materials, services, equipment, transportation and accessories and the performance of all operations necessary to complete the work of this Section, and as indicated on the Drawings and as specified.

B. The work shall include, but is not limited to, the following:

1. Provision of concrete pads for Big Belly Kiosks.

C. Work not included in the Contract:

1. Furnishing and installation of Big Belly Kiosks on the concrete pad will be by Others.

1.03 RELATED SECTIONS

A. Section 01020 - Allowances
B. Section 02200 – Earthwork
C. Section 03300 – Cast-in-Place Concrete

1.04 SUBMITTALS

A. Concrete mix design for concrete pad.

1.05 DELIVERY, STORAGE AND HANDLING

A. Deliver, store, and handle metal fabrication items to prevent damage and deterioration. Store assembled items off the ground.

PART 2 – PRODUCTS

2.01 CONCRETE SLAB FOR INSTALLATIONOF KIOSK

A. Cast-in-place concrete for slab shall conform to the requirements of Section 03300 - Cast-in-place Concrete and shall be 4,000 psi minimum strength at 28 days.

B. Compacted gravel backfill under slab shall conform to the requirements of Section 02200 - Earthwork.

PART 3 – EXECUTION

3.01 GENERAL

A. Provide concrete pad as dimensioned on the drawings. Concrete pad shall be installed level.

B. Finish for pad shall be a broom finish.

END OF SECTION

SECTION 02825

CHAIN LINK FENCING

PART 1 - GENERAL

1.01 GENERAL PROVISIONS

A. Attention is directed to the General Conditions of the Contract, all Divisions of the Specifications and the Contract Drawings, all of which apply to this section.

B. Examine and coordinate all Contract Drawings and other sections of the specifications for requirements which affect work of this section whether or not such work is specifically mentioned in this section. Coordinate work with other trades to assure the steady progress of all work under the Contract.

1.02 SCOPE OF WORK

A. Work under this Section includes:

1. Furnishing and installing vinyl-clad chain link fence and gates in the heights and locations shown on the drawings.

2. Furnishing and installing vinyl-clad chain link baseball backstop.

1.03 RELATED WORK

A. Section 02100 - Site Preparation and Demolition
B. Section 02200 - Earthwork
C. Section 03300 - Cast-in-Place Concrete

1.04 REFERENCE STANDARDS

A. Comply with standards of the Chain Link Fence Manufacturer’s Institute.

1.05 SUBMITTALS

A. Submit manufacturer's product literature demonstrating compliance with the Specifications.

1.06 DELIVERY, STORAGE AND HANDLING

A. Packaged materials shall be delivered to the site in original, unopened and unaltered containers clearly indicating the manufacture, brand name, lot or serial number and other identifying information.

B. Materials shall be stored in a dry location, off the ground and in such manner as to prevent damage, intrusion of foreign matter and weather. All materials which have

become damaged or otherwise unfit for use during delivery or storage shall be replaced at the expense of the Contractor.

C. The Contractor shall be responsible for timing the delivery of items so as to minimize onsite storage time prior to installation. Stored materials and items must be protected from the weather, careless handling and vandalism.

D. Contractor shall handle, pack and transport in a manner to minimize damage to the finish of materials. Upon arrival at the job site, it is the responsibility of the contractor to take equal precautions. Should minor damage occur to the finish the contractor shall restore damaged finishes and test for proper function. Clean and protect work from further damage.

E. Handle and store salvaged chain link fence components in a way to prevent damage and deterioration.

PART 2 - PRODUCTS

2.01 Vinyl Coated Chain Link Fence, Gates & Back-stop

A. Fabric shall meet the following requirements as a minimum:

1. Wire gauge shall be 9 gauge **prior to PVC coating**.

2. Wire finish: Wire shall have a polyvinyl chloride (PVC), plastic resin finish, factory applied over galvanizing prior to fabrication of fabric. Thickness of PVC coating shall be not less than 7 nor more than 20 mils thick. PVC coating shall be applied by the thermal fusion method over a thermoset plastic bonding agent. The bond shall exhibit equal or greater strength than the cohesive strength of the vinyl. All cut ends shall be coated with vinyl at the factory. PVC coated wire shall be capable of being woven into fabric without the PVC coating cracking, crazing, or peeling. Color shall be black.

3. Top and bottom selvages shall be knuckled.

B. Framework (Posts, Rails, and Gate Frame)

1. Steel parts shall be hot-dipped galvanized inside and out prior to vinyl coating.

a) Round pipe shall be Type 1, ASTM F 1083 round cold-formed steel standard weight Schedule 40, Minimum yield strength shall be 25,000 psi. Galvanizing shall conform with ASTM A-120 standard weight Schedule 40 except the hydrostatic testing requirement is waived.

2) Square gate posts and frames shall meet ASTM A500 Grade B with a minimum yield strength of 40,000 psi, sized as indicated.

2. Galvanized steel parts shall be coated with a polyvinyl chloride (PVC) plastic

resin finish. PVC coating for framework shall meet the above specifications for fabric coating. Frame color shall match fabric color.

3. Sizes for fence posts, gate frames and other framework members shall be as shown on the Drawings.

   a) Weights for posts shall be as follows:

Outside Diameter (Inches)	Minimum Pounds per Foot Tolerance ±5%
1.66	2.27
2.375	3.65
2.875	5.79
4.00	9.11

4. Provide continuous top rails in manufacturer's longest lengths, with expansion type couplings for each joint. Provide necessary fittings for attaching top rail to each gate, corner, pull and end post.

C. Hardware and accessories: Provide galvanized (ASTM A153) PVC-coated accessories and hardware, with the exception of nuts and bolts. Nuts and bolts shall be galvanized and powder-coated to match fabric color. Coating for all other parts shall meet the above specifications for fabric coating.

1. Post Tops: Galvanized, pressed steel or malleable iron, weather tight closure caps, 1 top for each post. Where top rail is used, provide tops with openings to accommodate top rails. Provide one (1) rounded cap for each end, corner or gate post.

2. Stretcher Bars - One piece lengths with minimum cross section of 3/16" x 3/4". Provide one (1) cross stretcher bar for each end post and two (2) for each corner and pull post.

3. Stretcher Bar Bands - Heavy pressed steel or malleable iron of 1/8" x 3/4" minimum cross section and be of sufficient size to secure stretcher bars to end, corner and pull posts.

4. Rail clamps to be standard clamps (boulevard clamps) furnished complete with fasteners with ASTM Designation A153.

5. Rail brace ends: Formed steel, malleable of cast iron, for connection of rail and brace to posts.

6. Ties - Fabric shall be attached using "Bandit" multi-lock cable ties as furnished by Hin and Coon of Boston, MA (Tel 617-268-1010), or an approved equal.

Multi-lock cable ties shall match color of fence fabric.

D. Concrete for footings shall conform to the requirements of Section 03300-Cast-in-Place Concrete. Compressive strength shall be 4,000 psi minimum.

2.02 Chain Link Swing Gates

A. Hinges: Structurally capable of supporting gate leaf and allow opening and closing without binding. Hinge shall permit gate to swing180° inward.

1. Latches: Provide drop bolt and latch as detailed on the drawings, and padlock keyed into the City's system.

PART 3 - EXECUTION

3.01 GENERAL

A. Install and fasten materials and systems in proper relation with adjacent construction and with uniform appearance. Items shall be installed in a level, plumb condition, true to the lines and grades shown on the Contract Drawings.

3.02 FENCE INSTALLATION

A. Rails - All rails, top, bottom, middle (where required) shall form a continuous brace from end to end of each fence run. Couplings shall be located a maximum of 12" from line posts. All end and corner posts shall be braced to the nearest line post with center brace rails.

B. Fabric - Dimension between finish grade and bottom selvage varies. Refer to drawings. Pull fabric taut and tie to posts and rails.

C. Stretcher Bars - Thread through fabric and secure to posts with tension bands spaced as shown on the Drawings.

D. Tie Wires - Wire shall be spaced as shown on the drawings and securely fastened by twisting around pipe to which attached, clasping and fasten firmly. Bend twisted ends of wire to minimize hazard to persons or clothing.

E. Fasteners - Install nuts for tension band and hardware bolts on side of fence opposite fabric side.

3.03 GUARANTEE

A. The Contractor shall cover the replacement of any damaged items or components, at no extra charge for the period of one year.

END OF SECTION

SECTION 02830

WELDED WIRE FENCE

PART 1 - GENERAL

1.01 Include General Conditions and all other Division 1 – General Requirements as part of the Section.

A. All of the Contract Documents, including the Contract Form, General Provisions, General Conditions, Supplemental Conditions, and all Attachments to the General Provisions, and Division 1 - General Requirements, apply to the work of this Section.

B. Coordinate work with trades affecting, or affected by, work of this Section. Cooperate with such trades to assure the steady progress of all work under the Contract.

C. The contractor shall provide all labor, materials and appurtenances necessary for the complete installation of the industrial steel ornamental fence system as specified.

1.02 WORK INCLUDED

A. Furnish and install custom color welded steel wire fence and at play area and exercise area, as shown on the Drawings.

B. Furnish and install custom color welded steel wire double swing gates at play area.

C. Related Work in other Sections:

1. Section 02200 - Earthwork.
2. Section 03300 - Cast-in-Place Concrete.

1.03 QUALITY ASSURANCE

A. The work of this Section shall be completely coordinated with the work of other Sections. Verify dimensions and work of other trades which adjoin materials of the Section before installing items specified.

1.04 SUBMITTALS

A. Product Information: Provide manufacturer's product data and information showing installation and limitations in use. Supply Certificates of Compliance for all materials required for fabrication and installation on all components. Provide color samples of surface finish for approval before fabrication.

B. Shop Drawings:

1. Shop drawings for welded steel wire fence shall show size and thicknesses of all members, types of materials, methods of connection and assembly, complete dimensions, clearances, anchorage, relationship to surrounding work by other trades, shop paint and protective coatings, and other pertinent details of

fabrication and installation.

2. Indicate elevation, sections, sizes, connection attachments, reinforcing, anchorage, openings, size and type of fasteners, size of welds, and any accessories.

C. Certificate of Conformance: Provide certificate verifying that each item was prepared, coated, inspected, and repairs made in accordance with this specification.

D. Warranty: Provide warranty that all materials furnished and work executed under this Section comply with Specifications and authorized changes.

E. Structural Certification: Provide written certification that structural requirements meet or exceed specifications included in Article 1.05 Performance Requirements.

1.05 PRODUCT HANDLING AND STORAGE

A. Upon receipt at the job site, all materials shall be checked to ensure that no damage occurred during shipping or handling. Materials shall be stored in such a manner to ensure proper ventilation and drainage and to protect against damage, weather, vandalism and theft.

PART 2 - MATERIALS

2.01 Welded steel wire fence

A. The welded wire fence system shall be Legi R/W fence (OuterSpace Landscape Furnishings, 7533 Draper Ave., La Jolla, CA 92037 858-459-0994) or approved equal.

B.

1. Mesh panels shall be Legi R-S.W.O. Mesh, or equal conforming to the following:

a) Panels for playground perimeter:

1) Panels shall be 4' ht nominal welded steel wire with straight top, with 50 x 200 mm (1.9" x 7.9") rectangular mesh openings, manufactured from 6 mm (.24") o.d. vertical wire, 8 mm (.31") o.d. double horizontal wire as shown on the Drawings.

2. Fence Posts shall be Legi “R” fence post, or equal, conforming to the following:

a) Post shall be rectangular steel tube (2.4" x 1.6") in cross section, with welded top cap (1.6" x 3.5") and 40 mm wide backing plate x the length of the mesh. Interior threaded inserts to receive bolts shall be spaced 7.9" o.c. along back of post.

b) On center post-spacing shall be 2500mm (98.4" or 8.2').

3. Bolts shall be .31" x 1.8" V2A stainless steel security one-way vandal resistant bolts removable only with a special tool.

4. Mesh ends to be overlapped behind post. Bolts to be passed through backing plate and mesh ends into threaded insrts. Overlapping mesh ends shall be 2.75" wide, which shall allow up to 0.8" tolerance in post spacing. Extra mesh shall be taken up at the corner panels, as shown on the drawings. Corners panels shall be field cut, and finished as shown on the Drawings.

C. Gates, Hinges & Latches

1. Gate shall be Legi “Klassik” double swing gate or approved equal, and as shown on the Drawings.

a) Gate posts shall consist of square tube steel 100 mm square with welded head and foot plates.

b) Gate leafs shall be composed of rectangular tube frames 60 x 40 mm or larger with mesh welded directly the frame.

c) The gate hinges shall have 65 x 40 mm mounting plate, brass washer and hinge pin welded to gate post.

d) Gate hinge plate 260 mm wide (10.2") with oval holes shall allow for a 0.4 inch adjustment of the gate wing.

e) Gates hinges shall be completely contained within the gate profile.

f) A base bolt (locking pin) shall be provided for double wing gates and shall be stored within the frame of the gate leaf and be immovable unless the opposite gate leaf is open.

2. Provide gate without manufacturer’s standard latch. Latch to be furnished by Contractor shall be D & D Technologies MagnaLatch. Field drill gate to install latch.

D. Finish: All material, unless otherwise indicated, shall be hot-dip galvanized after fabrication, with a zinc layer a minimum of 1.8 oz/sq.ft., stainless steel sand-blasted for optimum coating adhesion, and polyester powder-coated in non-lead, UV stable, thermally set powder paints.

1. Fence and gate color shall be chosen by the Owner from manufacturer’s standard color choices.

PART 3 - EXECUTION

3.01 INSTALLATION - GENERAL

A. The installation shall be laid out by the contractor in accordance with the construction documents.

B. Cutting, Fitting, and Placement: Perform cutting, drilling, and fitting required for installing metal fabrications. Set metal fabrications accurately in location, alignment,

and elevation; with edges and surfaces level, plumb, true and free of rack; and measured from established lines and levels.

C. Provide temporary bracing or anchors in formwork for items that are to be built or embedded into concrete, masonry or similar construction.

D. Fit exposed connections accurately together to form hairline joints. Do not weld, cut, or abrade surfaces of exterior units that are for bolted or screwed field connections.

3.02 INSTALLATION - WELDED WIRE FENCE

A. Field verify and adjust sections of the work prior to anchoring to ensure matching alignments and stability of members at abutting joints.

B. Install Ornamental Fencing posts plumb. Erect panels plumb true and free from rack and still maintain minimum, maximum, and typical clearances of bottom rail from finish grade. When holding panel true is not possible without exceeding those tolerances, rake assembled panels to approximate finished grade in as long and smooth gradients as possible.

C. Post Footings:

1. Coordinate installation of posts with construction of concrete walls and curbs.

2. When cutting/drilling rails or posts adhere to the following requirements:

a. Remove all metal shavings from cut area.

b. Apply zinc-rich primer to thoroughly cover cut edge and/or drilled hole.

c. Apply 2 coats of custom finish paint matching fence color.

2. Manufacturers spray cans or paint pens shall be used to prime and finish exposed surfaces; it is recommended that paint pens be used to prevent overspray.

3.03 GATE INSTALLATION

A. Install Gate posts and gate leaves plumb. Erect gate posts and leaves plumb true and free from rack and still maintain minimum, maximum, and typical clearances of bottom rail from finish grade.

1. Manufacturer’s gate drawings shall identify all necessary gate hardware required for the complete and proper installation of gates.

2. Gate hardware shall be installed per manufacturer’s recommendations.

3.04 ADJUSTING AND CLEANING

A. Touch-up Painting: Immediately after erection, clean bolted connections and abraded

areas per manufacturer's recommendations, and paint exposed areas with the same material (from the same paint lot) as used for shop painting to comply with SSPC-PA 1 and manufacturer's instructions for touching up shop-painted surfaces.

1. Apply by paint pen or spray can to provide a minimum 2.0 mil (0.05mm) dry film thickness.

B. The contractor shall clean the job site of excess materials, and legally dispose of off-site.

END OF SECTION

SECTION 02832

SEGMENTAL GRAVITY RETAINING WALL

PART - GENERAL

1.01 GENERAL PROVISIONS

A. All of the Contract Documents, including the Contract Form, General Provisions, General Conditions, Supplemental Conditions, and all Attachments to the General Provisions, and Division 1 - General Requirements, apply to the work of this Section.

1.02 SCOPE OF WORK

A. Provide all equipment and materials, and do all work necessary to complete the installation of Single-depth segmental gravity retaining walls without soil reinforcement as indicated on the Drawings and as specified.

1. Provide compaction testing as specified

1.03 RELATED WORK

A. Section 02100 - Site Preparation and Demolition.
B. Section 02200 - Earthwork.
C. Section 02725 - Drainage Pipe.

1.04 REFERENCES

A. The following standards and definitions are applicable to the work of this Section to the extent referenced herein:

1. ASTM C90 Load Bearing Concrete Masonry Units
2. ASTM C 140 Standard Test Methods of Sampling and Testing Concrete Masonry
3. ASTM D 698 Moisture Density Relationship for Soils, Standard Method.
4. ASTM C-1327 Standard Specification for Segmental Retaining Wall Units.
5. NCMA SRWU-1 Determination of Connection Strength between Segmental Concrete Units
6. NCMA SRWU-2 Determination of Shear Strength between Segmental Concrete Units
7. NCMA SRW Design Manual, 2nd Edition
8. ASTM D 422 Gradation of Soils.
9. ASTM D 424 Atterberg Limits of Soil.

1.05 SUBMITTALS

A. Product Data: For each type of segmented retaining wall and other manufactured products specified.

1. Submit a notarized manufacturer's certification providing test results and stating that the Segmental Retaining Wall Units (SRW) meet the requirements of the Specifications.

2. Samples for Verification: Sets for each color, finish, and pattern of unit required. Include 2 or more samples in each set showing the full range of variations expected.

3. Qualification Data: For firms and persons specified in the "Quality Assurance" Article to demonstrate their capabilities and experience. Include lists of completed projects with project names and addresses, names and addresses of architects and owners, and other information specified.

B. Submit shop drawings of retaining wall.

1.06 QUALITY ASSURANCE

A. Installer Qualifications: Engage an experienced installer who has completed segmental retaining walls similar in material, design, and extent to that indicated for Project that has resulted in construction with a record of successful in-service performance.

B.

1.07 DELIVERY, STORAGE, AND HANDLING

A. Contractor shall check materials upon delivery to assure that specified type and grade of materials have been received and proper color and texture of segmented retaining wall units have been received.

B. Contractor shall prevent excessive mud, wet concrete, epoxies and like materials that may affix themselves from coming in contact with materials..

C. Store and handle retaining wall units and related materials to prevent deterioration or damage due to moisture, temperature changes, contaminants, corrosion, breaking, chipping, or other causes.

D. Store accessories, including metal items, to prevent corrosion and accumulation of dirt and oil.

E. Damaged materials shall not be incorporated into the retaining wall.

PART 2 - PRODUCTS

2.01 SEGMENTED RETAINING WALL UNITS

A. Segmental Retaining Wall (SRW) units shall be Gravity Block, straight-face, split-face, as manufactured by Ideal Pavers, Waltham, MA or equal meeting the following requirements:

1. Segmented Retaining Wall (SRW) Units shall be machine-formed, Portland

cement concrete blocks specifically designed for retaining wall applications. SRW units assembled to meet the dimensional requirements much have integral concrete connectors between components.

a) Refer to Drawings for specific shapes required.

2. SRW unit shall meet the following architectural requirements:

   a) Units shall be sound and free of cracks or o ther defects that would interfere with the proper placing of the unit or significantly impair the strength or permanence of the construction.

   b) Color shall be a blend chosen from manufacturer's standard color selections.

3. SRW units shall meet the following structural requirements:

   a) Concrete used to manufacture segmented retaining wall units shall have a minimum 28 days compressive strength of 4,000 psi in accordance with ASTM C-1371. The concrete shall have adequate freeze/thaw protection with a maximum moisture absorption rate of 7%.

   b) Each course of SRW units shall be positively interlocked to the preceding couse with a minimum shear capacity of a su=420 lbs/ft and e su=42.0 as tested in accordance with NCMA SRWU-2.

   c) SRW units molded dimensions shall have no more than 1/8" tolerance from specified dimensions.

   d) Units shall be recommended by the manufacturer for construction of non-geogrid reinforced retaining walls up to 6' in height.

4. SRW units shall meet the following constructibility and geometric requirements:

   a) Units shall be positively engaged to the unit below so as to provide a minimum of 5/16" batter and maximum of 1" batter per vertical foot of wall height.

   b) Units shall be capable of turning corners or providing angles from 0 to 90 degrees.

5. Dimensions shall be as follows:

   a) Segmented retaining wall face units shall be approximately 18" in length by 8" in height.

   b) Cell units shall assemble into an interlocked cell that extends 36" minimum at right angles to the face.

c) Segmented retaining wall units (not including aggregate fill in unit voids) shall provide a minimum weight of 105 psf wall face area.

d) Segmented retaining wall units shall have a depth (front face to rear) to height ratio of 2:1, minimum.

e) Segmented retaining wall units shall be capable of being erected with the horizontal gap between adjacent units not exceeding 1/8 inch.

f) Segmented retaining wall units shall be capable of being installed with a continuous, level course at every 8 inches of height.

g) Segmented retaining wall units shall be capable of providing overlap of units on each successive course of a corner so that walls meeting at corner are interlocked and continuous. Segmented retaining wall units that require corners to be mitered shall not be allowed.

h) Segmented retaining wall units shall be sound and free of cracks or other defects that would interfere with the proper placing of the unit or significantly impair the strength or permanence of the structure. Cracking or excessive chipping may be grounds for rejection. Units showing cracks longer than ½ inch shall not be used within the wall. Units showing chips visible at a distance of 30 feet from the wall shall not be used within the wall.

i) Segmented retaining wall units' molded dimensions shall not differ more than ± 1/8 inch from that specified, in accordance with ASTM C1372.

6. Special Units: Provide corner units, end units, cap units, and other special shapes as necessary to produce retaining walls of dimensions and profiles indicated and to provide indicated textures on exposed surfaces.

B. CAP UNIT

1. Cap unit shall be Ideal Block "Universal Coping" or equal precast concrete coping with smooth finish, 3-1/2" nominal x 16" width x 13" depth.

C. ADHESIVE

1. Adhesive for attachment of coping shall be flexible high strength concrete adhesive, as manufactured by SW products, or equal.

2.02 INSTALLATION MATERIALS

A. Cap Adhesive: Product supplied or recommended by retaining wall unit manufacturer for adhering cap units to units below.

2.03 LEVELING PAD

A. Material for leveling pad shall conform be washed AASHTO #57 and shall be a minimum of 6 inches in depth. Lean concrete with a strength of 200-300 psi and 3 inches thick maximum may also be used as a leveling pad material. The leveling pad should extend laterally at least a distance of 6 inches from the toe and heel of the lowermost segmented retaining wall unit. Filter fabric shall be laid on grade prior to placing stone.

2.04 DRAINAGE AGGREGATE, CELL INFILL, AND DRAINAGE STONE

A. Wall base, unit backfill and drainage stone shall be washed AASHTO #57 stone.

2.05 IMPERVIOUS FILL

A. Impervious fill shall meet the following gradation requirements:

Sieve Size	% Passing
3"	100%
#4	80-100%
#40	50-90%
#100	40-80%
#200	30-80%

2.06 FILTER FABRIC

A. Filter fabric shall be Mirafi 140 N or equal.

PART 3 - EXECUTION

3.01 EXAMINATION

A. Examine areas to receive segmental retaining wall and conditions under which walls will be installed.

1. Do not proceed with installation until unsatisfactory conditions have been corrected.

3.02 RETAINING WALL INSTALLATION

A. Contractor shall excavate to the lines and grades shown on the project grading plans. Contractor shall take precautions to minimize over-excavation. Over-excavation shall be filled with compacted infill material, or as directed by the Landscape Architect, at the Contractor's expense.

B. Contractor shall verify location of existing structures and utilities prior to excavation. Contractor shall ensure all surrounding structures are protected from the effects of wall

excavation. Excavation support, if required, is the responsibility of the Contractor.

C. Foundation soil shall be proof-rolled and compacted to 95% standard Proctor density and inspected by the Owner's Representative prior to placement of leveling pad materials.

D. Leveling pad shall be placed as shown on the wall plans with a minimum thickness of 12 inches. The leveling pad should extend laterally at least a distance of 6 inches from the toe and heel of the lowermost segmented retaining wall unit.

E. Granular leveling pad material shall be compacted to provide a firm, level bearing surface on which to place the first course of units. Well-graded sand can be used to smooth the top 1/4 inch to 1/2 inch of the leveling pad. Compaction shall be with mechanical plate compactors to achieve 95% of maximum standard Proctor density (ASTM D 698).

3.03 SEGMENTED RETAINING WALL UNIT IN STALLION

A. All Segmented retaining wall units shall be installed at the proper elevation and orientation as shown on the plans and details on the construction documents, or as directed by the Landscape Architect. The segmented retaining wall units shall be installed in general accordance with the manufacturer's recommendations. The specifications and drawings shall govern in any conflict between the two requirements.

B. For ease of installation, generally the base course of segmented retaining wall units shall be all Standard units placed on the leveling pad. The units shall be leveled side-to-side, front-to-rear and with adjacent units, and aligned to ensure intimate contact with the leveling pad. The base course is the most important to ensure accurate and acceptable results. No gaps shall be left between the front of adjacent units. Alignment may be done by means of a stringline or offset from baseline to the back of the units.

C. Place alignment plugs in reverse position to provide 4.5 degree batter.

D. All excess debris shall be cleaned from top of units.

E. Lay successive courses, up to a maximum of 3 courses, before infilling.

F. Compact infill per manufacturer’s instructions.

G. Repeat until reaching top of wall units, just below the height of the cap units.

3.04 DRAINAGE MATERIAL

A. Drainage aggregate shall be installed to the line, grades and sections shown on the Construction Documents. Drainage aggregate shall be placed to the minimum thickness shown on the construction documents behind units as shown on the plans.

3.05 FILL PLACEMENT

A. The backfill shall be placed as shown in the wall plans in the maximum compacted lift thickness of 10 inches and shall be compacted to a minimum of 95% of standard Proctor density (ASTM D 698) at a moisture content within 2% of optimum. The backfill shall be placed and spread in such a manner as to eliminate movement of the segmented retaining wall units.

1. In each compacted backfill layer, perform at least 1 field in-place density test for each 100 feet or less of retaining wall length, but no fewer than 2 tests along a wall face.

B. Only hand-operated compaction equipment shall be allowed within 3 feet of the back of the wall units. Compaction within the 3 feet behind the wall units shall be achieved by at least three passes of a lightweight mechanical tamper, plate, or roller.

C. At the end of each day's operation, the Contractor shall slope the last level of backfill away from the wall facing and backfill to direct water runoff away from the retaining wall.

D. At completion of wall construction, backfill shall be placed level with final top of wall elevation. If final grading, paving, landscaping and/or storm drainage installation adjacent to the wall is not placed immediately after wall completion, temporary grading and drainage shall be provided to ensure water runoff is not directed at the wall nor allowed to collect or pond behind the wall until final construction adjacent to the wall is completed.

3.06 WALL CAP

A. Segmented retaining wall cap shall be properly aligned and glued to underlying units with a flexible, high-strength concrete adhesive. Rigid adhesive or mortar are not acceptable.

B. Caps shall overhang the top course of units by 3/4 inch to 1 inch. Slight variation in overhang is allowed to correct alignment at the top of the wall.

3.07 CONSTRUCTION TOLERANCES

A. Variation from Level: For bed-joint lines along walls, do not exceed 1/4 inch in 10 feet or 1 inch in 40 feet or more.

B. Variation from Indicated Batter: For slope of face of wall, do not vary from indicated slope by more than 1/4 inch in 10 feet.

C. Variation in Plan Position: For ends and faces of walls in relation to property lines, buildings, and other objects, do not vary from plan dimensions by more than 1 inch or from depicted plan relationship (scaled dimensions) by more than 3 inches.

D. Variation in Linear Wall Line: For walls indicated as straight, do not exceed 1/4 inch in 10 feet or 1 inch in 40 feet or more from a straight line.

3.08 ADJUSTING AND CLEANING

A. Remove and replace segmental retaining walls of the following description:

1. Broken, chipped, stained, or otherwise damaged units. Units may be repaired if methods and results are approved by Architect.

2. Segmental retaining walls not matching approved samples and mockups.

3. Segmental retaining walls not complying with other requirements indicated.

4. Replace in a manner that results in segmental retaining wall's matching approved samples and mockups, complying with other requirements, and showing no evidence of replacement.

3.09 CONSTRUCTION ADJACENT TO RETAINING WALL

A. The Contractor is responsible for ensuring that construction by others adjacent to the wall does not disturb the wall or place temporary construction loads on the wall that exceed design loads, including loads such as water pressure, temporary grades, or equipment loading. Heavy grading equipment shall be kept a minimum of 3 feet behind the back of the wall face. Equipment with wheel loads in excess of 150 psf live load shall not be operated within 10 feet of the face of the retaining wall during construction adjacent to the wall. Care should be taken by the Contractor to ensure water runoff is directed away from the wall structure until final grading and surface drainage collection systems are completed.

END OF SECTION

SECTION 02835

STEEL SERVICE GATE

PART 1- GENERAL

1.01 GENERAL PROVISIONS

A. Attention is directed to the General Conditions of the Contract, all Divisions of the Specifications and the Contract Drawings, all of which apply to this section.

1.02 SCOPE OF WORK

A. Work under this Section shall include all labor, materials, services, equipment, transportation and accessories and the performance of all operations necessary to complete the work of this Section, as indicated on the Contract Drawings and/or as specified herein and includes.

B. The work shall include, but is not limited to, the following:

1. Steel Gate with Post-mounted Lock Box

1.03 RELATED SECTIONS

A. Section 02200 - Earthwork
B. Section 02510 - Bituminous Concrete Paving
C. Section 03300 - Cast-in-Place Concrete

1.04 SUBMITTALS

A. Submit the following in accordance with the requirements of section 01300-SUBMITTALS:

1. Steel gate: Submit complete shop drawings for steel vehicular gate showing details of fabrication and welds.

2. Submit standard paint colors for selection by the Owner.

1.04 DELIVERY, STORAGE AND HANDLING

B. Deliver, store, and handle metal fabrication items to prevent damage and deterioration.

C. Store assembled items off the ground.

1.05 REFERENCE STANDARDS

A. All work shall comply with the minimum standards of the latest editions of the following codes and specifications, subject to modifications and amendments outlined herein.:

1. American Institute of Steel Construction, (AISC).
2. American Welding Society, (AWS)
3. American Society for Testing and Materials, (ASTM).
4. National Association of Architectural Metal Manufacturers, (NAAMM).

PART 2 - PRODUCTS

2.01 STEEL GATE

A. Steel pipe shall be seamless in conformance with ASTM Designation A53, Schedule 40, Grade A.

B. Steel plate shall conform to ASTM Designation A36.

C. Gate shall be hot-dip galvanized after fabrication. Galvanizing shall comply with ASTM A123, ASTM A 153, or ASTM A386. Provide at least 2 oz./sq. ft. zinc coating.

D. After galvanizing, provide shop applied prime and finish coat as follows:

1. One Coat Primer (dry film thickness 3.0 to 4.0 mils) of Tnemec No. 66 Hi-Build Epoxoline" Epoxy; Porter No. 4361 MCR-43 High Build Epoxy, Dupont "Corlar epoxy primer, or equal.

2. Apply two finish coats (dry film thickness 1.5 to 2.0 mils per coat) as follows: Tnemec No. 74 Endura-Shield IV Acrylic Polyurethane, Porter No. 8731 Hythane Ultra Acrylic Polyurethane, DuPont Imron Polyurethane, or equal.

E. Field touch up damaged or abraded galvanized surfaces with ZRC Cold Galvanizing Compound, PPG Speedhide Galvanized Steel Paint, or Tnemec 90-93 Zinc rich primer or approved equal, and touch up with above finish paint.

F. Key Security Lock Box shall be equal to 1650 Knox Residential Box supplied by the Knox Company, Irvine, CA and of type approved by the Waltham Fire Department.

1. The Contractor will need to apply to Waltham Fire Prevention and complete an application in order to purchase the Knox Box.

2. Lock Box shall be securely shop-welded to lock post of vehicular gate, facing swing post.

PART 3 - EXECUTION

3.01 GENERAL REQUIREMENTS

A. Site improvements shall be fabricated and fastened in accordance with the Drawings and approved Shop Drawings. Site improvements shall be installed in a level, plumb condition, true to the lines and grades shown on plans.

B. Steel fabrication for site improvements shall be accomplished using the highest standards of workmanship. Individual steel pieces to be welded shall be saw cut and carefully fitted together. All connections shall be full welded and ground flush and smooth. All fabricated steel items shall be fine sanded throughout prior to finishing to produce a high standard of surface smoothness. All surfaces and connections shall be without visible grinding marks, surface differentiation or variation.

C. Arc welding procedures shall conform to the current standards of the AWS. All welds shall be as designated on the plans and shall be ground smooth and flush to a neat finish. All welds shall be watertight and care shall be taken to minimize distortion due to heat. Metal shall not be primed, painted or galvanized before welding.

D. The Contractor shall be responsible for timing the delivery of items so as to minimize on-site storage time prior to installation and the Contractor shall handle site improvement materials and products in such a manner as to minimize any damage to the products' finish. Stored materials and items must be protected from weather, careless handling and vandalism. Suitable touch-up material shall be readily available to repair any damage immediately.

E. Shim bolt connections as necessary and secure bolts. Exposed bolts shall be fastened with an approved semi-permanent adhesive to protect against vandalism.

3.02 CONCRETE FOOTINGS

A. Cast-in-place concrete footings for site improvements shall be conform to the requirements of Section 03300 - Cast-in-place concrete and shall be 4,000 psi minimum strength at 28 days.

B. Compacted gravel backfill shall conform to the requirements of Section 02200 - Earthwork.

3.03 STEEL GATE

A. Install gate plumb, with swing arm level, and to layout dimensions shown on the Drawings.

END OF SECTION

SECTION 02845

WOOD GUARDRAIL

PART 1 - GENERAL

1.01 GENERAL PROVISIONS

A. Attention is directed to the General Conditions of the Contract, all Divisions of the Specifications and the Contract Drawings, all of which apply to this section.

B. Examine and coordinate all Contract Drawings and other sections of the specifications for requirements which affect work of this section whether or not such work is specifically mentioned in this section. Coordinate work with other trades to assure the steady progress of all work under the Contract.

1.02 SCOPE OF WORK

A. Work under this Section includes furnishing and installing wood guardrail in the location shown on the Drawings.

1.03 RELATED WORK

A. Section 02100 - Site Preparation and Demolition
B. Section 02200 - Earthwork

1.04 SUBMITTALS

A. Submit shop drawings for wood guardrail, demonstrating compliance with the Specifications.

B. Submit certification of wood type and grade.

1.05 DELIVERY, STORAGE AND HANDLING

A. Materials shall be stored in a dry location, off the ground and in such manner as to prevent damage, intrusion of foreign matter and weather. All materials which have become damaged or otherwise unfit for use during delivery or storage shall be replaced at the expense of the Contractor.

B. The Contractor shall be responsible for timing the delivery of items so as to minimize onsite storage time prior to installation. Stored materials and items must be protected from the weather, careless handling and vandalism.

C. Contractor shall handle, pack and transport in a manner to minimize damage to the finish of materials. Upon arrival at the job site, it is the responsibility of the contractor to take equal precautions. Should minor damage occur to the finish the contractor shall

restore damaged finishes and test for proper function. Clean and protect work from further damage.

PART 2 - PRODUCTS

2.01 Wood Guardrail

A. Wood guardrail shall be a dimensioned as shown on the Drawings.

1. Guardrail shall be constructed of solid pressure treated Southern Yellow Pine, planed to a smooth splinterless surface.

B. All hardware shall be galvanized steel.

C. Top beam of guardrail shall be fabricated to allow racking to smoothly align top rail with finished grade. End of rails shall be cut and angled to fit tightly together at posts.

PART 3 - EXECUTION

3.01 GENERAL

A. Install and fasten materials and systems in proper relation with adjacent construction and with uniform appearance. Items shall be installed in a level, plumb condition, true to the lines and grades shown on the Contract Drawings. Coordinate with work of other sections or trades.

1. Wood guardrail shall be installed to smoothly align with level or sloping finished grade. Posts shall be plumb.

B. Align posts and rails in consistent alignment, plumb and true.

END OF SECTION

SECTION 02848

ATHLETIC EQUIPMENT

PART 1 - GENERAL

1.01 GENERAL PROVISIONS

A. Attention is directed to the General Conditions of the Contract, all Divisions of the Specifications and the Contract Drawings, all of which apply to this section.

1.02 SCOPE OF WORK

A. Furnish and install softball accessories
   1. Pitching Rubber
   2. Removable Bases

B. Furnish and install adult exercise equipment

1.03 RELATED WORK

A. Section 02540 - Safety Surfacing
B. Section 03300 - Cast-in-Place Concrete

1.04 SUBMITTALS

A. Submit manufacturer's literature demonstrating compliance with the specifications.
B. Submit manufacturer's recommended installation details and instructions.
C. Where applicable, submit standard color choices.

1.05 DELIVERY STORAGE AND HANDLING

A. All materials shall be protected from weather and other damage prior to installation.

PART 2 - MATERIALS

2.01 Softball Accessories

A) Pitching Rubber shall be 24” professional pitching rubber, durable four-sided molded rubber exterior with interior PVC tube, PR-624/Pr-618 as manufactured by Jaypro or equal.

B) Bases shall be removable Model BB-700 as manufactured by Jaypro or equal.

   1) Bases shall have ground anchor covered with built in hinge cap when not in use.

2.02 EXERCISE EQUIPMENT

A) Exercise equipment shall be as manufactured by Outdoor-Fitness Inc., Monument, CO (1-877-517-2200) or equal, conforming to the following:

1) Equipment for each exercise station shall be of the form and function detailed on the Drawings and shall accomplish that function without moveable parts.

(a) Equipment shall be all steel with a heavy duty polyester powder coat.

(b) Equipment shall be fabricated from Schedule 40 steel pipe or other steel members as required. All members shall be welded.

B) Stainless steel hardware shall be provided in lieu of manufacturer's standard galvanized screws and bolts.

C) Manufacturer shall provide stickers with directions for use.

D) Manufacturer shall provide a 4 year warranty minimum on main frame steel posts, bars, steel structural equipment.

PART 3 - INSTALLATION

3.01 Softball accessories: Install according to manufacturer's instructions.

3.02 EXERCISE EQUIPMENT

A. Install according to manufacturer's instructions and as follows.

B. Install such that safety surfacing extends a minimum of 6' outwards from all points of the equipment.

C. Install such that there is at least 6' clear between pieces of equipment.

D. Install manufacturer's stickers with directions for use.

E. Install according to manufacturer's directions.

F. Install level and plumb.

END OF SECTION

SECTION 02850

SCOREBOARD

PART 1 - GENERAL

1.01 GENERAL PROVISIONS

A. Attention is directed to the General Conditions of the Contract, all Divisions of the Specifications and the Contract Drawings, all of which apply to this section.

1.02 SCOPE OF WORK

A. Provide and install new 8' x 16' Electronic Scoreboard with dedicated circuit and wireless controller.

B. Provide shop drawing for scoreboard footings, designed & stamped by a Massachusetts Licensed Engineer.

1.03 RELATED WORK

A. Section 03300 - Cast-in-Place Concrete

1.04 REFERENCES

A. Standard for Electric Signs, UL-48, 13th Edition
B. Standard for Control Centers for Changing Message Type Signs, UL-1433, 1st Edition
C. Standard for CAN/CSA C22.2
D. Federal Communications Commission Regulation Part 15
E. National Electric Code

1.05 QUALITY ASSURANCE

A. For outdoor use
B. Source Limitations: Obtain each type of scoring or related equipment through one source from a single manufacturer.
C. ETL listed to UL Standards 48m tested to CSA standards and CE-labeled.
D. NEC compliant
E. FCC compliant
F. ETLC listed to CAN/CSA 22

1.06 WARRANTY

A. Provide 5 years of parts coverage
B. Provide toll-free service coordination
C. Provide technical phone support

1.07 SUBMITTALS

A. Scoreboard, controller and radio:

1. Product data: Submit manufacturer's product illustrations, data and literature that fully describe the scoreboards and accessories proposed for installation.

2. Shop drawings: Submit mechanical and electrical drawings.

3. Maintenance data: Submit manufacturer's installation, operation, and maintenance manuals.

1.08 PROJECT CONDITIONS

A. Field measurements: Verify position and elevation of structure and its layout for scoreboard equipment. Verify existing dimensions of posts by field measurements.

B. Installation may proceed within acceptable weather conditions. .

1.09 DELIVERY STORAGE AND HANDLING

A. All materials shall be protected from weather and other damage prior to installation.

B. Scoreboard and equipment to be housed in a clean, dry environment.

PART 2 - MATERIALS

2.01 ELECTRONIC SCOREBOARD

A. Electronic Scoreboard shall be Daktronics Model BA-1518 (Local Representative: Scoreboard Enterprises, 274 Fruit Street, Mansfield, MA 02048 508-479-5827) or approved equal meeting the following requirements:

1. Board shall be an outdoor LED 100% solid state electronic baseball/softball scoreboard displaying HOME and GUEST total RUNS and HITS to 99 along with ERR (errors) to 9 for each team, BALL to three, STRIKE to two, OUT to two, and INNING t0 19, and indicating which team is at bat.

a) Dimensions: 8'-0" (2.44 m) high, 16'-0" (4.88 m) wide, 0'-8" (203 mm) deep
b) Weight: 400 lb (181 kg)
c) Power requirement: 150 W
d) Construction : Alcoa aluminum alloy 5052 construction
e) Digits & Indicators
1) All digits shall be 18” high. All indicators shall be 2” in diameter.
2) Color shall be choice of red, amber or white LED digits and indicators.
3) Digits shall be weather sealed.

f) Captions
   1) HOME, GUEST and INNING captions: 12" high.
   2) All other captions shall be 10” in height.
   3) All captions: white vinyl applied directly to scoreboard face

2.02 CONTROLLER

A. Controller shall be All Sport 5000 with 2.4 GHz spread spectrum radio control option with internal battery, or equal, meeting the following requirements:

1. Controller shall have 32-character LCD display, with an LCD viewing area of approximately 3.89” x .94” high. Dimensions of LCD characters shall be approximately 0.189” x .378” high. There shall be two lines of 16 large LCD characters.

2. Controller shall be interactive with user, prompting and providing feedback.

3. LCD shall be easily readable in sunlight and shall be backlit with LED’s to allow for readability in the dark.

4. Controller shall have a heavy duty anodized aluminum case with snap action sealed keyboard.

5. Controller shall be 120 VAC, 60 Hz, 6 watts maximum power.

6. Controller shall be static electricity resistant (20,000 volts)

7. Memory shall be non-volatile and cumulative.

8. Controller shall be FCC approved and ETL listed to US and Canadian standards.

2.03 2.4 GHZ SPREAD SPECTRUM RADIO CONTROL

A. Radio shall have 2.4 GHz spread spectrum with frequency hopping feature.
B. Radio shall have 24 non-interfering channels.
C. Output power: 200 milliwatt.
D. Radio shall be FCC approved, and ETL listed to UL standards and CSA tested.

2.04 DEDICATED CIRCUIT TO SCOREBOARD

A. Provide 120 VAC dedicated power line.

PART 3 - INSTALLATION

3.01 SCOREBOARD

A. Verify that mounting structure is ready to receive scoreboard. Verify that placement of conduit and junction boxes are as specified and indicated in plans and shop drawings.

3.02 INSTALLATION

A. Scoreboard

1. Install scoreboard according to manufacturer's instructions and as shown on the Drawings.
2. Verify unit is plumb and level.
3. Connect scoreboard to control center.
` 4. Check for proper operation of control unit, scoreboard and all features.
5. Verify earth ground does not exceed 15 ohms.

END OF SECTION

SECTION 02860

PLAYGROUND EQUIPMENT

PART 1- GENERAL

1.01 GENERAL PROVISIONS

A. All of the Contract Documents, including the Contract Form, General Provisions, General Conditions, Supplemental Conditions, and all Attachments to the General Provisions, and Division 1 - General Requirements, apply to the work of this Section.

1.02 SCOPE OF WORK

A. The Owner will furnish all play equipment for installation by the Contractor. See Section 01040 - Control of the Work, Section 1.13 for a description of the Contractor's responsibilities in checking, receiving, storing and coordinating with the manufacturer to receive a complete and satisfactory order.

1. For those items to be supplied by the Owner, the Contractor shall provide any incidental hardware and all footings and other materials not supplied by the manufacturer, but required for installation of these items.

2. Refer to Playground Enlargement for illustration of playground equipment to be furnished for installation. Playground equipment furnished is manufactured by Landscape Structures Inc.

1.03 PLAYGROUND AUDIT: At the completion of the work of this section, the Contractor shall arrange and pay for an Audit of the completed playground by a Certified Playground Safety Inspector. Audit shall be a comprehensive evaluation of the playground including compliance and accessibility. Audit shall be based on the current ASTM and CPSG standards for playgrounds. Audit shall contain a listing of each separate piece of equipment.

1.04 Footing and installation details are included on the Drawings for purposes of bidding. It shall be the Contractor's responsibility to obtain complete installation instructions from the manufacturer. Where the Drawings and Manufacturer's instructions differ, notify the Landscape Architect prior to proceeding.

1.05 RELATED SECTIONS

A. Section 02200 – Earthwork

B. Section 02540 – Safety Surfacing.

C. Section 03300 – Cast-in-Place Concrete

1.06 SUBMITTALS

A. Submit concrete mix, as required under Section 03300 - Cast-in-Place Concrete.

B. Submit manufacturer's installation instructions for each piece of play equipment.

C. The Contractor shall engage the services of each of the Equipment manufacturers to review the installation and to provide a written statement asserting that the supplied equipment and installation meet manufacturer's standards.

1.07 DELIVERY, STORAGE AND HANDLING

A. Deliver, store and handle metal fabrication items to prevent damage and deterioration. Store assembled items off the ground.

1.06 REFERENCE STANDARDS

A. Materials, layout and installation of play equipment shall comply with the following guidelines and standards:

1. ASTM F 1487 - American Society for Testing Materials Standard Consumer Safety Performance Specification for Playground Equipment for Public Use, latest edition.

2. ASTM F2373-08 - Standard Consumer Safety Performance Specification for Public Use Play Equipment for Children 6 months through 23 months

3. National Bureau of Standards, U.S. Consumer Product Safety Commission (CPSC), Public Playground Safety Handbook, 2008

4. IPEMA - International Play Equipment Manufacturers Association

1.07 QUALITY ASSURANCE

A. Installer Qualifications: An experienced installer who has specialized in installing work similar in material, design, and extent to that indicated for this project and who is acceptable to the manufacturer of playground equipment.

B. Provide the Owner with a two year warranty against failure of the installation.

C. A manufacturer's representative from each different manufacturer shall be engaged to provide on-site checking of the progress and process of installation of their respective equipment. The representative shall supervise the installation and adjustment of the playground equipment to ensure that equipment meets the requirements of CPSC and ASTM F1487.

1.08 COORDINATION

A. Coordinate construction of equipment use zones and fall heights during installation of playground equipment with installation of protective surfacing specified in Section

02540 Playground Surfacing. Sequence work so that protective surfacing can be installed as soon as possible after concrete footings have set.

PART 2 - PRODUCTS

2.01 CONCRETE FOOTINGS

A. Cast-in-place concrete footings for site improvements shall be conform to the requirements of Section 03300 - Cast-in-place Concrete and shall be 4,000 psi minimum strength at 28 days.

B. Compacted gravel backfill and crushed stone shall conform to the requirements of Section 02200 - Earthwork.

2.02 PLAY EQUIPMENT

A. Play equipment furnished by the Owner and to be installed by the Contractor is shown on the Drawings.

PART 3 - INSTALLATION

3.01 General

A. Do not begin installation before final grading required for placing protective surfacing is completed.

B. Comply with manufacturer's written installation instructions, unless more stringent requirements are indicated. Anchor playground equipment securely, positioned at locations and elevations indicated on Shop Drawings.

C. Maximum Equipment Height: Coordinate installed heights of equipment and components with installation of protective surfacing. Set equipment so fall heights and elevation requirements for age group use and accessibility are within required limits. Verify that playground equipment elevations comply with requirements for each type and component of equipment.

D.. The Contractor shall arrange and pay any fees necessary for playground equipment manufacturer’s technical personnel to inspect playground layout and playground equipment during installation and at final completion to certify compliance with ASTM F 1487 and CPSC guidelines.

1. Notify the Landscape Architect 48 hours in advance of date and time of final inspection.

3.02 Verification of Use Zones

A. Contractor shall layout all playground equipment as per the Drawings.

B. The Contractor shall be aware of all clear Use Zones around the play equipment, as indicated on the drawings, and shall ensure that all minimum Use Zones are complied with. Verify locations of playground perimeter.

C. Use Zones are the areas around all play equipment that shall be clear of any obstacles, including, but not limited to, curbs, trees, and fencing. Contractor shall bring to the attention of the Landscape Architect any discrepancies between plans and actual site conditions, where there is a conflict with the required use zone.

1. The Contractor shall notify the Landscape Architect for review of the layout prior to installation of play equipment and pouring of footings.

3.03 FOOTINGS

A. Provide concrete footings dimensioned and spaced as shown on the Drawings, and as required by the play equipment manufacturer. Top of footing shall be flush with and shall not protrude above aggregate base course in order to provide adequate depth of safety surfacing.

B. Post and Footing Excavation: Hand-excavate holes for posts and footings to dimensions, profile, spacing, and in locations indicated on Drawings, in firm, undisturbed or compacted subgrade soil. Level bearing surfaces with drainage fill to required elevation.

C. Post Setting: Set main-frame equipment posts in concrete footing. Protect portion of posts above footing from concrete splatter. Place concrete around posts and vibrate or tamp for consolidation. Verify that posts are set plumb or at the correct angle and are aligned and at the correct height and spacing. Hold posts in position during placement and finishing operations until concrete is sufficiently cured.

1. Concrete Footings: Smooth top, and shape to shed water.

D. Assemble play components according to manufacturer's instructions.

E. Pour concrete footings and let set a minimum of 24 hours before proceeding.

F. Place assembly in footings, block up, plumb and level.

3.05 ADJUSTING

A. Adjust movable playground equipment components to operate smoothly, easily, and quietly, free from binding, warp, distortion, nonalignment, misplacement, disruption, or malfunction, throughout entire operational range.

3.06 CLEANING

A. After completing playground equipment installation, inspect components. Remove spots, dirt, and debris. Repair damaged finishes to match original finish or replace component.

3.07 PLAYGROUND AUDIT

A. At the completion of the work of this Section, pay for and schedule a complete Playground Audit by a Certified Playground Safety Inspector . The audit shall list individual pieces of equipment in the playground. The audit shall be a detailed comprehensive playground safety report, including photographs of any non-compliant areas. Any violations of ASTM 1487-11, current CPSC or ADA regulations, or other playground hazards shall be identified. Final Acceptance shall not be granted until the Contractor's work is certified to be compliant.

END OF SECTION

SECTION 02875

SHADE SHELTERS & DUGOUTS

PART 1 - GENERAL

1.01 GENERAL PROVISIONS

A. Attention is directed to the General Conditions of the Contract, all Divisions of the Specifications and the Contract Drawings, all of which apply to this Section.

B. Examine and coordinate all Contract Drawings and other section of the specifications for requirements which affect work of this section whether or not such work is specifically mentioned in this section. Coordinate work with other trades to assure the steady progress of all work under the Contract. The Contractor shall refer to the Contract Documents for all new work and coordinate how it relates to this Section.

1.02 SCOPE OF WORK

A. The work shall include, but is not limited to, the following:

1. Furnishing and installing metal and polyethylene fabric shade shelters in the locations shown on the drawings, in accordance with manufacturer's recommendations, and as specified herein.

2. Furnishing and installing dugouts as shown on the Drawings.

3. For metal shade shelters and dugouts, provide shop drawings for footings designed & stamped by a Massachusetts registered Engineer.

1.03 RELATED WORK

A. Section 31 00 00 - Earthwork.
B. Section 03 30 00 - Cast-in-Place Concrete.

1.04 SUBMITTALS

A. Submit the following in accordance with the requirements of Part II:

1. Manufacturer's complete shop drawings indicating type, size & gauge of materials, connection details, and layout plan for footings and posts, demonstrating compliance with the Specifications.

2. For the metal shade structure and dug-out submit structural calculations for the structure footings, sealed by a registered engineer in the state of Massachusetts.
3. Shop drawings for steel reinforcement of shade structure footings.
4. Manufacturer's installation instructions.

5. Manufacturer's standard color chart and samples. Manufacturer's drawings indicating type, size & gauge of materials, connection details, and layout plan for footings and posts, demonstrating compliance with the Specifications.
6. Shop drawings for steel reinforcement of shade shelter footings.
7. Manufacturer's installation instructions.
8. Manufacturer's standard color chart and samples.

1.05 QUALITY CONTROL

A. Manufacturer qualifications: Manufacturer shall have a minimum of 5 years experience in the fabrication of tubular steel shade shelters. Manufacturer shall have fabricated similar shelters to that which is specified.

B. Primary frame installer and roof installer for structures shall have a minimum of five (5) years documented experience installing similar structures.

C. Members shall be designed according to the American Institute of Steel Construction (AISC) specifications and the American Iron end Steel Institute (AISA) specifications for cold-formed members.

D. Structural steel shall be detailed, fabricated and erected in accordance with the latest edition of the American Institute of Steel Constructions (AISC) Specification Manual.

E. Powder coating shall be Powder Coating Institute 4000 Certified or equal.

F. Fabrication welds shall be in strict accordance with the structural welding code of the American Welding Society (AWS) specifications. All structural welds shall be in compliance with the requirements of "Pre-qualified" welded joints. All welding shall conform to ASTM A-233 series E-7OXX electrodes - low hydrogen. Field welding is not allowed.

G. All welding shall be performed by American Welding society Certified Welders and shall conform to the latest edition of AWS D1.1 or D1.3 as required.

1.06 DELIVERY, STORAGE AND HANDLING

A. Deliver, store, and handle metal fabrication items to prevent damage and deterioration.

B. Store assembled items off the ground.

1.07 REFERENCE STANDARDS

A. Materials and methods of construction shall comply with the following standards:

1. ASTM A 36/A 36M - Standard Specification for Carbon Structural Steel; 2003a.

2. ASTM A 325 - Standard Specification for Structural Steel Bolts, Heat Treated, 120,000 PSI Minimum Tensile Strength; 2004.

3. ASTM A 307 - Standard Specification for Carbon Steel Bolts and Studs, 60,000 PSI Tensile Strength; 2003a.

4. ASTM A 563 - Standard Specification for Carbon and Alloy Steel Nuts; 2004.

5. ASTM A 500 - Standard Specification for Cold-Formed Welded and Seamless Carbon Steel Structural Tubing in Rounds and Shapes; 2003a.

6. ASTM A 653/A 653M - Standard Specification for Steel Sheet, Zinc-Coated (Galvanized) or Zinc-Iron Alloy-Coated (Galvanealed) by the Hot-Dip Process; 2003.

7. ASTM A 792/A 792M - Standard Specification for Steel Sheet, 55% Aluminum-Zinc Alloy Coated by the Hot-Dip Process; 2003.

8. American Institute of Steel Construction (AISC).

9. American Iron and Steel Institute (AISI) Specifications for Cold Formed Members.

10. American Society of Testing Material (ASTM).

11. American Welding Society (AWS).

12. OSHA Steel Erection Standard 29 CFR 1926.750 Part R.

13. SSPC-SP 2 – Hand Tool Cleaning; Society for Protective Coatings; 2000.

14. SSPC-SP 10 - Near-White Blast Cleaning; Society for Protective Coatings; 2000.

15. ICC Evaluation Service, ESR-1006, Structural Insulated Panels.

1.08 WARRANTYS

A. Fabric Shade Shelter shall have manufacturer's limited 20 year warranty on upright posts and support structure frames against failure due to rust-through corrosion.

B. Fabric Shade shelter manufacturer shall provide a limited 10 year warranty on fabric and fabric stitching thread against degradation, cracking or material breakdown resulting from UV exposure, mold, or mildew, and on fastening devices and cables.

PART 2 - PRODUCTS

2.01 FABRIC SHADE SHELTERS

A. Shade shelter shall be a steel powder-coated frame supported polyethylene fabric shelter as manufactured by Shade Systems represented locally by O'Brien and Sons of Medfield, MA (Tel:508-359-4200) or approved equal.

1. Color of fabric and powder coated frame shall be chosen by the Landscape Architect/Owner from manufacturer's standard color choices.

B. Posts, Structural Frame Tubing and Hardware: All tubing used shall be cold-formed and milled per ASTM-A135 and ASTM A-500. Material testing shall be in accordance with ASTM E-8. Minimum yield shall be 40,000 psi with a minimum tensile strength of 45,000 psi on all posts. All tubing shall be pre-cut to appropriate lengths, and where applicable all outside surfaces shall be galvanized with an interior corrosion-resistant zinc-rich coating. Where required, support pipes shall be schedule 40 hot-dip galvanized or powder-coated black steel. All fastening hardware shall be stainless steel.

1. Tubing members shall be factory-welded by Certified Welders to American Welding Society (AWS) specifications and to the highest standards of quality workmanship. Weldments shall be finished with a zinc-rich galvanized coating.

2. Polyester Powder-Coating Process: Powder coated parts shall be completely cleaned and a hot zinc phosphate pretreatment with non-chromic sealer applied. Powder-coating shall be electrostatically applied and oven-cured at 375 to 425 degrees Fahrenheit. Polyester powders shall meet or exceed ASTM standards for Adhesion, Hardness, Impact, Flexibility, Overbake Resistance, and Salt Spray Resistance.

a. Color for frame components shall be chosen by the Landscape Architect/Owner from manufacturer's standard color choices.

C. Fastening System:

1. Fastening System to consist of the Turn-N-Slide™ fastening device factory installed at each roof rafter corner, or approved equal fastening system. Fastening system shall distribute fabric tension evenly over rafters and secure the fabric at the proper tautness. A locking cap shall secure the end of each rafter with a vandal-resistant bolt . Fastening system shall allow ease of removal of fabric.

D. Fabric shall be "CoolNet" shade fabric supplied by Shade Systems Inc., or approved equal.

1. Fabric shall be knitted of monofilament and tape construction high density polyethylene with ultra violet stabilizers and flame retardant. UV block factor shall not be less than 91%.

a. Fabric shall pass the requirements established under the NFPA 701 Test Method 2 test standards for flammability including the accelerated water leaching protocol.

b. Fabric shall also meet the following criteria:

Nominal thickness	0.057 inches
Fabric Mass	Min. 337 g/m^2
Light Fastness	7-8 (Blue Wool Scale)
Weather Fastness	4-5 (Grey Scale Test)
Tear Resistance	Warp 210N;Weft 276N
Breaking Force	Warp 786N;Weft 1544N
Bursting Pressure	Mean 3125kPa
Bursting Force	Mean 1775N

c. Color of fabric shall be chosen by the Landscape Architect/Owner from manufacturer's standard color choices.

E. Fabric fastening: Fabric shall be attached to frame using a vinyl covered minimum 1/4" diameter galvanized and clear vinyl coated cable. Cable fasteners are zinc-plated copper for maximum corrosion resistance.

1. Fastening system shall be equivalent to the "Turn-N-Slide" fastening system provided by Shade Systems Inc., allowing fast removal of fabric, with sealed rafter and moving sleeve, independent per side, pre-looped and clamped at the factory.

F. Hardware shall be vandal resistant.

2.02 METAL SHADE STRUCTURES AND DUGOUTS

A. Materials shall conform to the following:

1. Tube Steel ASTM A500 Grade B
2. Schedule Pipe ASTM A53 (Grade B)
3. Structural Steel Plate ASTM A36
4. Roofing Panels ASTM A653

2.03 METAL SHADE STRUCTURE

A. Metal Shade Shelter shall be Polygon Ramada Model, 12' x 32' with custom round columns, standing seam roof, lightening protection, and Poli-5000 finish or equal.

B. Roofing nails shall not be visible from the interior of the shelter.

C. Finish color shall be chosen from manufacturer's standard colors.

D. Finish shall conform to the following:

Test Description	Test Method	Poli-5000 Results
Salt Spray Resistance	ASTM B 117/ ASTM D 1654 Method 2 (scraping)	10,000 hours, no creep from scribe line, rating of 10
Humidity	ASTM D2247-02	5,000 hours with no loss of adhesion or blistering
Light UV/ Resistance	ASTM G154-04 2000 hours exposure. Alternate cycles (4 hours UVC and 4 hours condensation)	a) No chalking b) 75% color retention c) Color variation-maximum 3.0 E variation CIE formula (before and after 2,000 hours exposure)
Stain Resistance	ASTM D1308-02e1 24 hours exposure with 10% concentration	No stain from following: Mustard, Tannic Acid, Catsup, Citric Acid, Coffee, Tartaric Acid, Pepsi Cola, Beer, Oleic Acid, Lactic Acid, Orange Juice
Scratch Resistance	Hoffman Scratch Hardness Tester	No substrate appearance with 1,000 gram load
Adhesion	ASTM D3359-02	ASTM Class 4B rating or better
Resistance Impact	ASTM D2794-93	100 in-lbs. w/o cracking
Hardness	ASTM D3363-92a	2H min-no indentation
Flexibility	ASTM D522-93a	1/8" no cracking/loss of adhesion at bend
Abrasion	Taber abraser CS10 Wheel (1,000 mg load)	14 mg. max weight loss per cycle
Solvent Resistance	50+ MEK rubs	Minimal to no dulling or color removal

2.03 DUGOUTS

A. Dugouts shall be Poligon Model Linkup DUG-10x32, or equal, customized as shown on the Drawings.

B. Dugouts shall conform to requirements 2.02 B thru 2.02 D, as specified above for the metal shade shelter.

C. Roofing for Dugouts shall be 24 gauge, galvalume coated, and Kynar 500 painted, or approved equal finish.

D. Metal roofing and back enclosure shall be corrugated with corrugations 7.2” o.c. at 1-1/2” depth.

E. Provide lightening arrestor kit and grounding as shown on the Drawings.

PART 3 - EXECUTION

3.01 Assembly

A. Carefully lay out footings according to manufacturer’s dimensions.

B. Construct steel reinforced footings in accordance with Section 03300 - Cast-in-Place Concrete. Footings shall be 4,000 PSI concrete.

C. Shelter shall be erected in a workman-like manner with framing and fabric installed according to the manufacturer’s installation instructions.

1. Care shall be taken to avoid damaging the shelter during installation.

2. Touch-up any damage to finish with manufacturer supplied touch-up paint.

END OF SECTION

SECTION 02891

TRAFFIC SIGNS

PART 1 - GENERAL

1.01 RELATED DOCUMENTS

A. All of the Contract Documents, including the Contract Form, General Provisions, General Conditions, Supplemental Conditions, and all Attachments to the General Provisions, and Division 1 - General Requirements, apply to the work of this Section.

1.02 REQUIREMENTS INCLUDED

A. Provide all equipment and materials, and do all work necessary to complete the installation of exterior signs as indicated on the Drawings and as specified.

B. The work of this Section includes, but is not limited to:

1. Furnishing and installing traffic signage as shown on the Drawings.

1.03 RELATED SECTIONS

A. Section 03300 - Cast-in-Place Concrete.

1.04 REFERENCE STANDARDS

A. Manual of Uniform Traffic Control Devices (MUTCD), latest edition.

B. Massachusetts Highway Department Standard Specifications for Highways and Bridges, latest edition.

1.05 SUBMITTALS

A. Product Data: Submit manufacturer's product data for the products of this Section. Provide complete product description and specifications, catalog cuts, and other descriptive data indicated compliance with the Specifications.

1.06 DELIVERY, STORAGE, AND HANDLING

B. Deliver materials and products unopened. Store and handle in strict compliance with manufacturer's instructions and recommendations. Store under cover and protect from weather damage.

PART 2 – PRODUCTS

2.01 ALUMINUM SIGNS

A. General: Provide manufacturer's standard extrusions, sections, sheet, and plate, of alloy and temper recommended by aluminum manufacturer or finisher for type, use, and finish indicated, but not less than strength and durability properties specified below:

1. Structural Aluminum Shapes: ASTM B 308, 6061 alloy.

2. Extruded Aluminum Bars, Rods, Shapes, and Tubes: ASTM B 221, 6063 alloy.

3. Aluminum Sheet and Plate: ASTTv1 B 209, alloy 1100, 3003, or 5052.

B. Reflectivity: Aluminum signs shall have high performance Type III reflective sheeting conforming to M9.30.0 of the Massachusetts Highway Department Standard Specifications.

C. Aluminum signs shall be .080 thick flat.

D. Sign supports shall be heavy duty high tensile steel break-away 2 lbs / foot square sign posts.

E. All fastening hardware shall be galvanized.

2.03 MISCELLANEOUS MATERIALS

A. Fasteners: Unless otherwise indicated, use concealed fasteners in all work of this Section. Fabricate fasteners from metals that are non-corrosive to sign surface materials and mounting substrates.

1. Fasteners shall be roundhead or countersunk, and tamperproof.

2. Spacers and washers shall be neoprene.

PART 3 - EXECUTION

3.01 GENERAL

A. Locate sign units and accessories where shown and scheduled. Use mounting methods indicated.

B. Erect work square, plumb and true, accurately fitted, and with tight joints and intersections.

3.02 SIGN INSTALLATION

A. General Installation Requirements: Strictly comply with manufacturer's instructions and recommendations, except where more restrictive requirements are specified in this section.

B. Installation: Install units plumb, level, in alignment and plane without warp or rack. Anchor securely in place.

C. Install signs on breakaway post as detailed in the Drawings.

D. Touch-up damaged coatings and finishes.

3.03 TOLERANCES

C. The following allowable installed tolerances are allowable variations from locations and dimensions indicated by the Contract Documents. Do not add these tolerances to any allowable tolerances indicated for other work.

1. Allowable Variation from True Plumb: ± 1/8 in. in 10 ft. - 0 in.
2. Allowable Variation from True Line: ± 1/8 in. in 10 ft. - 0 in.
3. Allowable Variation from True Level: ± 1/16 in. in 10 ft. - 0 in.

END OF SECTION

SECTION 02901

PLANTING SOILS

PART 1 - GENERAL

1.01 RELATED DOCUMENTS

A. All of the Contract Documents, including the Contract Form, General Provisions, General Conditions, Supplemental Conditions, and all Attachments to the General Provisions, and Division 1 - General Requirements, apply to the work of this Section.

B. Examine all Contract Documents and all other Sections of the Specifications for requirements therein affecting the work of this trade.

1.02 SUMMARY

A. The work of this Section consists of providing all equipment and materials and performing all work necessary to supply, test, place, and amend planting soils as indicated on the Drawings and as recommended by the loam soils analysis.

1. Provide loam testing to demonstrate compliance with the Specifications and provide recommendations for fertilizer and soil amendments for specific species on the Plant List.

2. Supply loam as necessary to provide the required depth of topsoil and planting backfill volume. Topsoil stockpiled during site preparation operations may be utilized if it is unadulterated with subsoil, meets the Specifications for loam, and is screened. Supply additional off-site loam as necessary to provide the required volume of loam.

3. Refer to Sections 02902 Fertilizers & Amendments and Section 02925 Lawns & Native Grasses for specification of and incorporation of fertilizers & amendments. Refer to Section 02950 for specific planting mix backfill requirements.

4. Refer to Section 02901 for placing of loam for seeded areas.

1.03 RELATED WORK UNDER OTHER SECTIONS

A. The following items of related work are specified and included in other Sections of the Specifications:

1. Section 02100 - Site Preparation
2. Section 02200 - Earthwork
3. Section 02902 - Fertilizers & Amendments

4. Section 02925 - Lawns & Native Grasses
5. Section 02950 - Planting.

1.04 TESTING

A. The Contractor shall supply testing results for proposed loam source as follows:

1. Comprehensive mechanical sieve analysis of soil to determine USDA classification, determination of pH, soil organic matter, exchangeable acidity, Modified Morgan extractable nutrients (P, K, Ca, Mg, Fe, Mn, Zn, Cu, B, S), lead (Pb), and aluminum (Al), cation exchange capacity, and base saturation. , as well as crop specific lime and nutrient recommendations.

2. Testing shall also include recommendations by the testing lab for specific lime and nutrient recommendations for the lawns, and specific trees and shrubs listed on the planting plan. Should these recommendations differ from those required by the Specifications, the Contractor shall adjust amendments to match recommendations.

1.05 REFERENCES

A. Commonwealth of Massachusetts Highway Department (MHD): Standard Specifications for Highways and Bridges

B. USDA Soil Conservation Service Soil Classification System.

1.06 SUBMITTALS

A. Submit test results for loam.

C. Submit recommended rates and type of Nitrogen and Phosphorus fertilizers recommended by the soils testing agency for lawn areas, roses, and deciduous trees and shrubs.

PART 2 - PRODUCTS

2.01 LOAM BORROW

A. Loam shall be a sandy loam or loam soil determined by mechanical analysis based on the USDA Soil Conservation Service Soil classification system. It shall be of uniform composition with no admixture of subsoil.

B. Prior to amendment, loam shall have an acidity range of pH 6.0 to pH 6.8 and shall contain not less than 4% nor more than 20% organic matter.

C. Loam shall be screened to be free of stones greater than 3/4" diameter, lumps, plants,

and their roots, debris and other extraneous matter over 3/4" in diameter, or excess quantities of smaller pieces of such material. It shall not contain toxic substances harmful to plant growth.

2.02 STORAGE AND PROTECTION

A. Loam stockpiles shall be protected from erosion at all times. Off-site loam shall be spread immediately, or if scheduling requires that material is stock-piled on site for more than 24 hours, stockpiles shall be covered with tarpaulin or other soil erosion acceptable to the Owner's Representative and the Waltham Conservation Commission.

B. No loam shall be stock-piled within 50 feet of a wetland.

C. No loam borrow shall be handled in any way if it is wet or frozen.

END OF SECTION

SECTION 02902

FERTILIZERS & AMENDMENTS

PART 1 - GENERAL

1.01 SUMMARY

A. The Contractor shall provide all labor, materials, equipment and services necessary for, and incidental to, preparation of ground surfaces, fertilizing, liming, seeding, mulching, and maintenance of seeded areas as shown on the Drawings or as specified herein.

1.02 RELATED SECTIONS

A. Section 02200 - Earthwork
B. Section 02900 – Lawns & Native Grasses
C. Section 02901 - Planting Soils
D. Section 02950 - Planting

1.03 SUBMITTALS

A. Submit manufacturer's certification and/or literature for the following:

1. Fertilizers
2. Soil Amendments

1.04 DELIVERY, STORAGE, AND HANDLING

A. Deliver fertilizer materials in original unopened containers, showing weight, analysis, and name of manufacturer. Store in a manner to prevent wetting and deterioration.

B. Deliver packaged materials in containers showing weight, analysis and name of manufacturer. Protect materials from deterioration during delivery, and while stored at the site.

1.05 FERTILIZER BEST MANAGEMENT PRACTICES

A. Phosphate fertilizers shall not be used without testing soils and obtaining recommendations from testing agencies stating the need for and quantity of phosphate to be applied for grass areas based on the soils test result.

B. Fertilizer shall not be applied outside the growing season, defined as April 15th to October 31st. No late season fertilization is allowed.

C. No fertilizer shall be applied during rainfall or before prediction of rain.

D. Do not allow fertilizer to spill onto pavements or hard surfaces. Fertilizer inadvertently applied to impervious surfaces shall be swept or blown back into the target area or returned to its original container.

PART 2 - PRODUCTS

2.01 MATERIALS

A. Fertilizer for seeding or sodding:

1. Starter Fertilizer: The phosphate content of the starter fertilizer shall be based on recommendations by the Soils Testing Laboratory for the specific application of establishing new turf.

2. At least 50% of the nitrogen in the fertilizer shall be a slow release form of nitrogen, such as a polymer-coated time-release nitrogen Polyon 50% 20-10-10 (local distributor Harrell's Turf Specialties, 508-832-5008) or equal

3. Maintenance Fertilizer, if required, shall be a non-phosphate fertilizer with at least 80% of the nitrogen as controlled release polymer coated nitrogen, as manufactured by Polyon or equal.

B. Soil Additives

1. Acidulant for adjustment of loam borrow pH shall be commercial grade flours of sulfite, ferrous sulfate, or aluminum sulfate that are unadulterated. Acidulants shall be delivered in unopened containers with the name of the manufacturer, material, analysis and net weight appearing on each container.

2. Ground limestone for adjustment of loam borrow pH shall contain not less than eighty five percent (85%) of total carbonates and shall be ground to such fineness that forty percent (40%) will pass through 100 mesh sieve and ninety five percent (95%) will pass through a 20 mesh sieve. Contractor shall be aware of loam borrow pH and the amount of lime needed to adjust pH to specification in accordance with testing lab recommendations.

3. Peat moss shall he composed of the partly decomposed sterns and leaves of any of several species of sphagnum moss. It shall be free from wood, decomposed colloidal residue and other foreign matter. It shall have an acidity range cf 3.3 pH to 5.5 pH as determined in accordance with the methods of testing of A.O.A.C., latest edition. Its water absorbing ability shall be a minimum of 1,100% by weight on an oven-dry basis.

4. Gypsum ($CaSO4-2H2O$) shall be agricultural grade, granular form.

5. Phosphorus shall be superphosphate or triple superphosphate.

6. Potassium shall be sulfate of potash, $K2S04$.

END OF SECTION

SECTION 02925

LAWNS & NATIVE GRASSES

PART 1 - GENERAL

1 .01 RELATED DOCUMENTS

A. All of the Contract Documents, including the Contract Form, General Provisions, General Conditions, Supplemental Conditions, and all Attachments to the General Provisions, and Division 1 - General Requirements, apply to the work of this Section

1 .02 REQUIREMENTS INCLUDED

A. Provide all equipment and materials, and do all work necessary to complete the final grading of root zone mix, application of soil amendments and fertilizers, sodding; and maintenance of sodded lawn areas as indicated on the Drawings and as specified. The work shall include, but is not limited to, the following:

1. Placing of loam

2. Incorporation of fertilizer & amendments into spread and compacted loam

3. Hydroseeding turf and native grass mixes. Limit of grading and earthwork shall be limit of seeding unless otherwise indicated on the Contract Documents. All lawn areas disturbed outside the limit of seeding shall be prepared and seeded as specified herein at no additional cost to the Owner.

4. Sodding with one year guarantee

5. Maintenance of seeded and sodded areas from substantial completion of the project thru a 60 day establishment period, or until final acceptance of entire project, whichever is longer.

6. The new irrigation system shall be utilized for watering during the establishment and maintenance period of lawns. The amount of water utilized during the establishment period shall be metered and the Contractor shall reimburse the City for the cost. The anticipated cost of the water shall be included in the Bid price.

1 .03 RELATED WORK

A. Examine Contract Documents for requirements which affect the work of this Section. Other specification sections which directly relate to the work of this Section include, but are not limited to:

1. Section 02100 - Site Preparation
2. Section 02200 - Earthwork
3. Section 02810 - Irrigation System
4. Section 02901 - Planting Soils: Loam testing

5. Section 02902 - Fertilizers & Amendments

1 .04 QUALIFICATIONS

A. Installer of lawns and native grass area shall have had experience successfully installing at least 3 projects of similar size within the last 5 years.

1 .05 REFERENCES

A. American Sod Producers Associations (ASPA), Specifications for Turfgrass Sod Materials and Transplanting/Installing.

1 .06 SUBMITTALS

A. At least 30 days prior to intended use, the Contractor shall provide the following samples and submittals for approval. Do not order materials until Owner's Representative's approval of samples, certifications or test results has been obtained. Delivered materials shall closely match the approved samples. Acceptance shall not constitute final acceptance. The Owner's Representative reserves the right to reject on or after delivery any material that does not meet these Specifications.

1. Material Sampling and Testing of Loam Borrow from on-site and off-site sources shall be as specified under Section 02901 - Planting Topsoil.

2. Seed: Submit a manufacturer's Certificate of Compliance to the Specifications with each shipment of each type of seed. These certificates shall include the guaranteed percentages of purity, weed content and germination of the seed, and also the net weight and date of shipment. No seed may he sown until the Contractor has submitted the certificates.

3. Hydroseeding: Prior to the start of hydroseeding, submit a certified statement for approval as to the number of pounds of materials to be used per 100 gallons of water. Submit proposed process to be used.

4. Hydroseeding Mulch: Submit 4 copies of manufacturer's literature and one material sample.

5. Sod:

a) Do not order sod until final approval is given by the Landscape Architect, based on the following information to be submitted by the Contractor:

b) Certification of grass seed mix for sod, identify sod source, including names and telephone number of supplier.

c) Two (2) samples of sod, 3' long x 18"wide.

1 .07 DEFINITIONS

A. Weeds shall include but not be necessarily limited to the following: Dandelion, Jimsonweed,

Quackgrass, Morning Glory, Rush Grass, Mustard, Lambs quarter, Chickweed, Cress, Crabgrass, Canadian Thistle, Nutgrass, Poison Oak, Bermuda Grass, Johnson Grass, Poison Ivy, Nutsedge, Nimble Will, Bindweed, Bent Grass, Wild Garlic, Perennial Sorrel, and Brome Grass.

1 .08 DELIVERY, STORAGE AND HANDLING

A. Store seed in a manner to prevent wetting and deterioration.

B. Harvest, store and handle sod according to the requirements of the American Sod Producers Association (ASPA), “Specifications for Turfgrass Sod Materials and Transplanting/Installing”

PART 2 - PRODUCTS

2 .01 MATERIALS

A. SEED

1. Seed mixture shall be fresh, clean, new crop seed. Grass shall be of the previous years crop. The weed seed content shall not exceed 0.01% by weight. The seed shall be furnished and delivered in the proportion specified below in new, clean, sealed and properly labeled containers. All seed shall comply with State and Federal seed laws. Seed that has become wet, moldy or otherwise damaged shall not be acceptable.

2. Seed Mixture #1 shall be Mowable Moist Native Mix A as supplied by Ernst Conservation seed, or equal. Mix shall be as follows, seeded at 7 lb/1000 SF:

% of Mix By Weight	Botanical Name	Common Name
5.0	Agrostis perennans	Autumn Bentgrass
50.7	Festuca rubra	Creeping Red Fescue
8.0	Lolium multiflorum	Annual Ryegrass
36.3	Poa palustris	Fowl Bluegrass

3. Non-mowable Seed Mix #2 for bio-detention basin bottom and sides shall be Ernst Conservation Seeds “Native Detention Area Mix - ERNMX-183"(1-800-873-3321) or equal with the following percentages and species. Seed at 1 lb/1000 square feet.

Proportion by Weight	Botanical Name	Common Name
28%	Panicum clandestinum “Tioga”	Deertongue
24%	Carex vulpinoidea, PA Ecotype	Fox Sedge
20%	Elymus virginicus, PA Ecotype	Virginia Wildrye
20%	Panicum virgatum “Shawnee”	Switchgrass
4%	Agrostis perennans, PA Ecotype	Autumn Bentgrass
3%	Juncus tenuis, PA Ecotype	Path Rush
1%	Juncus effusus	Soft Rush

B. SOD

1. Sod shall be nursery grown on agricultural land cultivated specifically for sod; free of objectionable grassy or broadleaf weeds (less than five such plants per 100 square feet); cut at a uniform minimum thickness of 3/4" inch (excluding top growth and thatch) at time of cutting; individual pieces cut to supplier's standard width and length with maximum allowable deviation of five percent; composed of grass mixtures recommended by the New England Sod Producers Association, as follows.
2. Sod shall have the following percentages of named grass species and named varieties. Possible source: Down East Turf Farms (1-800-634-0090):

   32% Jumpstart Kentucky Bluegrass
   32% Midnight Kentucky Bluegrass
   16% Ridgeline Kentucky Bluegrass
   10% Fairmount Chewings Fescue
   10% Charismatic II Perennial Ryegrass

3. Sod with broken pad and torn or uneven edges will not be acceptable.

4. Sod shall be harvested in big rolls equal to 250 square feet per roll, 4'-0" in width and 62'-6" in length for sodding the athletic field surface. Small rolls measuring 1'-6" in width shall only be used for detail and cut in work around existing site features and for repair work as required, unless large areas of repair are required which warrant the use of 4'-0" big rolls. Use of 1'-6" wide rolls shall be kept to a minimum.

2 .02 FERTILIZERS, LIMESTONE & AMENDMENTS

A. As required by the loam testing results of Section 02901 - Planting Soils and as specified in Section 02902 - Fertilizer and Amendments.

2 .03 WOOD FIBER MULCH

A. Mulch to cover hydroseeded areas shall be 100% wood fiber mulch processed from whole wood chips manufactured specifically for standard hydraulic mulching equipment.

B. The mulch shall be of such character that the fiber will be dispersed into a uniform slurry when mixed with water. It shall be nontoxic to plant life or animal life.

C. Mulch shall contain a non-petroleum based organic tackifier and a green dye to allow for easy visual metering during application but shall be non-injurious to plant growth.

2 .04 WATER

A. Water shall be supplied through use of the new irrigation system. Water use shall be metered and paid for by the Contractor.

PART 3 - EXECUTION

3 .01 EXAMINATION

A. Examine areas to receive lawns and grass for compliance with requirements and for conditions affecting performance of work of this Section. Do not proceed with installation until unsatisfactory conditions have been corrected.

3 .02 PREPARATION

A. Protect structures, utilities, sidewalks, pavements, and other facilities, trees, shrubs, and plantings from damage caused by seeding operations.

B. Protect adjacent and adjoining areas from hydroseed overspray.

C. Provide erosion-control measures to prevent erosion or displacement of soils and discharge of soil-bearing water runoff or airborne dust to adjacent properties and walkways.

3 .03 PLANTING SOIL PREPARATION

A. Limit subgrade preparation to areas that will be planted in the immediate future.

B. Scarify subgrade to a minimum depth of 6 inches prior to spreading planting soil mix. Remove stones larger than 3/4 inch in any dimension, sticks, roots, rubbish, and other deleterious material.

C. Mix soil amendments with loam at rates recommended by the testing agency. Either mix soil before spreading or apply soil amendments on surface of spread loam and mix thoroughly into top 6 inches of loam by harrowing or tilling before planting.

1. Mix lime or other soil amendments with dry soil by harrowing or tilling prior to applying fertilizer

D. Spread planting soil mixture to depth required to meet thickness, grades, and elevations shown. Do not spread if planting soil or subgrade is frozen or wet.

E. Install loam in lifts, not to exceed 6" prior to compaction.

F. Compact each lift of loam sufficiently to reduce settling but not enough to prevent the movement of water and feeder roots through the soil. The loam borrow in each lift should feel firm to the foot in all areas and make only slight heel prints. At completionof the loam borrow installation, the soil should offer a firm, even resistance when a soil sampling tube is inserted from lift to lift.

G. Loam compaction shall be achieved with a 100 lb roller or other equipment to provide a firm seed bed of approximately 85% compaction.

H. Select equipment and otherwise phase the installation of the loam borrow to ensure that wheeled equipment does not travel over subsoil, placed fills, or ordinary borrow or already installed soil.

I. Preparation of Unchanged Grades: Where lawns are to be planted in areas unaltered or undisturbed by excavating, grading, or surface soil stripping operations, prepare soil as follows:
   1. Cut and remove and dispose of existing grasses, vegetation, and turf. Do not turn over into soil being prepared for lawns.

   2. Till surface soil to a depth of at least 8 inches to a homogenous mixture of fine texture. Apply required soil amendments and mix thoroughly into top 6 inches of soil by harrowing or tilling. Trim high areas and fill in depressions.

   3. Clean surface soil of roots, plants, sod, stones, clay lumps, and other extraneous materials harmful to plant growth.

   4. Remove waste material, including grass, vegetation, and turf, and legally dispose of it off the Owner's property.

J. Grade lawn and grass areas to a smooth, even surface with loose, uniformly fine texture. Roll and rake, remove ridges, and fill depressions to meet finish grades. Limit fine grading to areas that can be planted in the immediate future. Remove trash, debris, stones larger than 3/4 inch in any dimension, and other objects that may interfere with planting or maintenance operations.

K. At the completion of fine grading, and before seeding, apply initial fertilization as recommended by the soil testing agency at specified rates.

L. Moisten prepared lawn areas before planting when soil is dry. Water thoroughly and allow surface to dry before planting. Do not create muddy soil.

M. Restore prepared areas if eroded or otherwise disturbed after fine grading and before planting.

N. Confirm that the final grade of loam borrow is at the proper finish grade elevations. Adjust the grade as required to meet the contours and spot elevations noted on the Plans. Request the Owner’s representative to inspect the final grade prior to proceeding with seeding.

3 .04 SCHEDULE FOR SEEDING OR SODDING

A. Contractor shall obtain Owner’s Representative’s written approval of fine grading and bed preparation before proceeding with seeding or sodding operations.

B. Do not begin seeding or sodding until the irrigation system is fully functional.

C. The season for seeding shall he from April 1 to June 1 and from August 15 to October 15. The actual planting of seed shall be done, however, only during periods within this season that are normal for such work as determined by weather conditions and by accepted practice in this locality. To prevent loss of soil via water and wind erosion and to prevent the flow of sediment, fertilizer, and pesticides onto roadways, sidewalks, and into catch basins, seed loam areas

within 5 days of spreading the loam.

1. If detention basin native grasses are not seeded in the Spring, the Landscape Architect will make no-cost adjustment of species in mix.

3 .05 HYDROSEEDING

A. Do not hydroseed if rain is forecast to occur before completion of hydroseeding and straw mulching can be completed. If practicable, hydroseed after rain when soil is moist.

B. Perform seeding within 20 minutes after mixing seed and water. In no case should seed be left in the tank for longer than 1 hour.

C. When seeding native grasses, use mechanical paddle agitating equipment. Centrifugal pumps are more damaging to native grasses.

D. Seed only when the bed is in a friable condition, not muddy or hard.

3 .06 HYDROSEED PROCESS

A. Hydroseeding shall be a two-step process.

1. Step one shall consist of spreading 100 percent of the required seed with water uniformly over the prepared loam bed so that the seed comes into direct contact with the soil. To mark the progress of the hydroseeding operation the Contractor may add 10 percent of the wood fiber mulch to the slurry.

2. Step two shall consist of a separate application of wood fiber mulch immediately following the first step of hydroseeding noted above. Apply the wood fiber mulch at a rate of 2,000 pounds per acre. If hydroseeding occurs in hot weather, provide 3,000 pounds per acre.

3 .07 MAINTENANCE

A. Maintenance shall begin immediately after any area is seeded and shall continue for a minimum sixty (60) day active growing period or until Final Acceptance, whichever is longer, following the completion of all lawn construction work, and until final acceptance of the project. In the event that seeding operations are completed too late in the Fall for adequate germination and growth of grass, then maintenance shall continue into the following Spring for 60 days minimum in the Spring.

B. Maintenance shall include re-seeding, mowing, watering, weeding, fertilizing a minimum of two times in addition to the fertilizer incorporated by harrowing into the spread loam, and resetting and straightening of protective barriers. Lawn work maintenance shall also include chemical treatments as required for fungus and/or pest control.

C. During the maintenance period, any decline in the condition of seeded areas shall require immediate action to identify potential problems and to undertake corrective measures.

D. Watering shall be done in a manner that will provide uniform coverage, prevent erosion due to application of excessive quantities over small areas, and prevent damage to the finished surface

by the watering equipment.

E. Protection:

1. Lawn areas shall be protected at a minimum by a barrier of plastic safety fencing.

2. Barriers shall be placed immediately after lawn construction and shall be maintained until Acceptance.

F. After the grass in seeded areas has germinated, reseed all areas and parts of areas that fail to show a uniform stand of grass. Reseed such areas and parts of areas repeatedly until all areas are covered with a satisfactory growth of grass with no less than 20 grass shoots per square inch and 2,880 grass shoots per square foot. Reseeding together with necessary grading, fertilizing, and trimming shall be done at the Contractor's expense.

G. Mowing and Edging:

1. The Contractor shall keep all lawn areas mowed until Acceptance of the contract by cutting to a height of 2 inches when growth reaches 3 inches.

2. At each mowing, all edges of walks, drives, plant beds and other border conditions shall be edge trimmed by hand or machine to produce straight and uniform edge conditions.

3. On paved areas, remove clippings and debris generated by each mowing, and legally dispose of off-site. Do not remove grass clipping from lawn areas.

4. Do not mow grass when wet.

H. Fertilizing Seeded and Sodded Areas: The first application of fertilizer for seeded areas shall be as specified Section 02901 - Planting Soil. A second application of fertilizer shall be applied to seeded and overseeded areas at the time of the first mowing. This second application shall be applied at a rate that ensures that one-half pound of nitrogen is applied per 1,000 square feet. For seeded areas phosphorus and potassium shall be applied proportionally in accordance with the recommendations of the soil tests and the quantities previously integrated into the soil during the first application. For overseeded areas phosphorus and potassium shall be applied proportionally in accordance with and in the quantities recommended of the soil tests for on-site loam. This second application shall correspond to the following application rates dependent upon the month of application.

1. May 1-15: Apply 1.0 pound of nitrogen per 1,000 square feet.
2. June 15-30: Apply 1.0 pound of nitrogen per 1,000 square feet.
3. August 15 through September 15: Apply 1.0 pound of nitrogen per 1,000 square feet.
4. November 1-15: Apply 1.5 pounds of nitrogen per 1,000 square feet.

I. Nitrogen fertilizer shall be composed of 50 percent slowly soluble or slow release nitrogen fertilizer.

J. Applying Limestone: Should the Contractor be required to return in the Spring due to inadequate germination and growth of grass, as specified in this Specification Section 02945 -

Seeded Lawns, the Contractor shall at the beginning of the next seeding or sodding season and spread limestone across all lawn areas installed under this Contract. Limestone shall he spread at rates determined by the soil tests as specified in Section 32 91 10 – Planting Topsoil.

3 .08 ACCEPTANCE

A. Following the minimum required maintenance periods for lawn construction, the Contractor shall request the Owner's Representative in writing for a formal inspection of the completed work. Request for inspection shall be received by the Owner's Representative at least 10 Days before anticipated date of inspection.

B. Acceptance Requirements

1. At the end of the maintenance period, seeded areas shall have a close stand of grass as defined above substantially free of weeds, disease free, and with no bare spots greater than 3 inches in diameter over greater than 5 percent of the overall seeded area. At least 90 percent of the grass established shall be permanent grass species. If seeded areas are deficient, the Contractor's responsibility for maintenance of all seeded areas shall be extended until deficiencies are corrected. Seeded areas to be corrected shall be prepared and reseeded in accordance with the requirements of this Section.

2. At the time of acceptance, the Contractor shall remove temporary barriers used to protect lawn areas.

3 .09 CLEAN UP

A. Absolutely no debris may be left on the site. Excavated material shall be removed as directed. Repair any damage to site or structures to restore them to their original condition, as directed by the Owner's Representative, at no additional cost to the Owner.

END OF SECTION

SECTION 02950

PLANTING

PART I - GENERAL

1.01 RELATED DOCUMENTS

A. All of the Contract Documents, including the Contract Form, General Provisions, General Conditions, Supplemental Conditions, and all Attachments to the General Provisions, and Division 1 - General Requirements, apply to the work of this Section.

B. Examine all Contract Documents and all other Sections of the Specifications for requirements therein affecting the work of this trade.

1.02 REQUIREMENTS INCLUDED

A. The work of this Section consists of providing all labor, equipment, materials, incidental work, and construction methods necessary to perform all planting work and related items as indicated on the Drawings and as specified.

B. The work shall include, but is not limited to, the following:

1. Planting trees and shrubs.
2. Mulching planting beds.
3. Planting maintenance.
4. One year guarantee period for trees and shrubs.

1.03 RELATED WORK UNDER OTHER SECTIONS

A. The following items of related work are specified and included in other Sections of the Specifications:

1. Section 02901 - Planting Soils
2. Section 02902 - Fertilizers

1.04 REFERENCES

A. The following standards shall apply to the work of this Section.

1. MHD Standard Specifications: Massachusetts Highway Department Standard Specifications for Highways and Bridges, 1988 Edition.
2. Hortus III, 1976, L. H. Bailey Hortorium.
3. American National Standards Institute (ANSI):
   Z60.1 American Standard for Nursery Stock,, latest edition, published by American Association of Nurserymen, (AAN).

1.05 SUBMITTALS

A. Submit proof of landscape contractor's experience to the Owner's Representative in accordance with Quality Assurance paragraph of this Section 02950 - Planting.

B. Submit to the Owner's Representative representative samples, certifications, manufacturer's product data and certified test results for materials specified below. Materials shall not be ordered or delivered until the required submittals have been reviewed and approved by the Owner's Representative. Delivered materials shall closely match the approved samples. Approval shall not constitute final acceptance. The Owner's Representative reserves the right to reject, on or after delivery, any material which does not meet these Specifications.

C. Material Sampling and Testing:

1. Material Sampling and Testing of Loam Borrow from Off-Site Sources shall he as specified in Section 02901 - Planting Soils.

2. Planting Mulch: Submit a one cubic foot sample.

3. Antidesiccant: Submit manufacturer's product data.

4. Peat: Submit manufacturer's product data.

5. Mycorrhizal Fungal Inoculant:

a. Submit manufacturer's product data certifying that inoculant being supplied conforms to these Specifications.

. 6. Soil Additives: Submit manufacturer's product data for all soil additives needed to amend a specific soil in order to meet the requirements of this Section 02950 - Planting.

1.06 EXAMINATION OF CONDITIONS

A. All areas to he planted shall be inspected by the Contractor before starting work and any defects such as incorrect grading or inadequate drainage shall he reported to the Owner's Representative prior to beginning this work.

B. The Contractor shall be solely responsible for judging the full extent of work requirements involved, including but not limited to the potential need for storing and maintaining plants temporarily and/or rehandling plants prior to final installation.

C. Protection of plants is the full responsibility of the Contractor between the time of digging at the nursery and final acceptance.

1.07 QUALITY ASSURANCE

A. The Contractor shall locate plant material sources and ensure that plants are shipped in timely fashion for installation. No substitutions are allowed without the written permission of the Landscape Architect.

B. Qualification of Landscape Contractor: The work of this Section 02950 - Planting, shall he performed by a landscape contracting firm which has successfully installed work of a similar quality, schedule requirement, and construction detailing with a minimum of five years experience.

C. Qualification of Foreman or Crew Leader: All work of unloading, stockpiling, storing, transporting on-site - Planting, staking and guying, fertilizing, and maintenance of trees, shrubs, vines, groundcover, and perennials shall be supervised by a foreman or crew leader who is a certified landscape professional or a certified horticulturist.

1. Landscape professional shall mean a Massachusetts Certified Landscape Professional certified by the Associated Landscape Contractors of Massachusetts.
2. Horticulturist means a Massachusetts Certified Horticulturist as certified by the Massachusetts Nursery and Landscape Association.
3. Certification shall be current. Proof of certification shall be submitted per Submittals paragraph of this Section 02950 - Planting.

D. Qualification of Arborist: All work of pruning shall be performed by an arborist certified by the Massachusetts Arborist Association or the International Society of Arboriculture.

PART 2 - PRODUCTS

2.01 LOAM BORROW

A. Loam borrow for planting backfill shall he as specified in Section 02901 - Planting Soils, of this Specification.

2.02 SOIL ADDITIVES

A. Soil additives shall be as specified in Section 02901 - Planting Soils, of this Specification.

2.03 FERTILIZERS

A. Fertilizer shall be as specified in Section 02902 - Fertilizers.

2.04 PLANT MATERIAL INSPECTION

A. At least one month prior to the expected planting date, the Contractor shall request that the Owner's Representative provide a representative to select and tag stock to he

planted under this Section 02950 - Planting.

B. Plants to be inspected shall be in locations and conditions that allow direct and unobscured inspection by the Owner's Representative. Container grown or balled and burlapped shrubs shall be pulled from holding blocks by the nurseryman for scrutiny by the Owner's Representative at no additional cost to the Owner. Harvested trees held in storage shall not have branches tied up. Harvested trees shall not have trunks obscured by burlap, cardboard trunk protection, or other devices that would otherwise obscure inspection. In the event that branches are tied up, trunks are obscured by burlap or cardboard trunk protection, or root flares hidden by burlap and twine and the Owner's Representative cannot inspect root flares, trunks or branching habit, the Contractor shall bear all responsibility and costs associated with tree rejection at a later date during the course of the Contract.

C. Inspection and approval of plants at the source shall not impair the right of subsequent inspection and rejection upon delivery to the site, or during the progress of the work if the Owner's Representative finds that plants do not meet the requirements of the Plant List or this Contract, have declined noticeably due to handling abuse, lack of maintenance, or other causes. Cost of replacements, as required, shall be borne by the Contractor.

2.05 GRADES AND STANDARDS OF PLANTS

A. The Contractor shall furnish all plants shown on the Contract Documents, as specified, and in quantities listed on the Plant List. No substitutions will be permitted, without written approval by the Owner's Representative. All plants shall be nursery grown unless specifically authorized to he collected as noted on the Plant List.

B. All plants shall be typical of their species or variety and shall have a normal habit of growth and be legibly tagged with the proper name. Only plant stock grown within Hardiness Zones 1 through 6b, as established by the USDA Plant Hardiness Zone Map, latest edition, will be accepted.

C. Plants shall be in accordance with ASNI Standards of the American Association of Nurserymen except as noted in this Section - Planting. Botanical plant names shall be in accordance with plant designations included in Hortus III.

D. All deciduous trees shall meet the following standards:

1. Trees shall have a single, straight trunk, well formed, and sturdy. No part of the trunk shall be conspicuously crooked as compared with normal trees of the same variety.

2. All pruning wounds shall show vigorous bark on all edges at the time of harvest. Pruning scars within the crown of any tree shall be clean cut and shall leave no protrusion beyond the branch collar.

3. Trees shall be free from signs of pest and disease damage. The trunk shall be free from sun scald, frost cracks, and wounds resulting from abrasions, fire, animal damage, or other causes.

4. All trees shall have healthy, vigorous leaves or needles of normal size, color, shape, and texture for the particular species and variety.

5. Unless otherwise indicated on the Plant List, the height and spread of deciduous shade trees shall be the minimum requirements.

6. Take caliper measurements for deciduous trees 6 inches above ground level up to and including 4 inches caliper size and 12 inches above ground for larger sizes.

7. No deciduous tree shall be pruned after the Owner's Representative has tagged the plant in the nursery except as directed by the Owner's Representative.

8. Unless otherwise noted on the Plant List, the height to the first branch shall be not less than 6.5 from finish grade to comply with ADA requirements.

2.06 ROOT SYSTEMS

A. Each plant shall have an extensive, symmetrically balanced fibrous root system. Any root ball which shows signs of asymmetry, girdling, injury, or damage to the root system shall he rejected. All parts of the fibrous root system of all plants shall be moist and fresh with a white color when washed of soil. When the plant is removed from the container, the visible root mass shall be healthy with white root tips. The root systems of all plants shall he free of disease, insect pests, eggs, or larvae.

B. Minimum root ball diameters and depths shall he in accordance with ANSI standards.

C. No plants shall be loose in the container.

D. Curling or spiraling of the roots along the walls of rigid containers will not be accepted. Curling, spiraling or girdling roots within balled and burlapped material will not be accepted. Container grown plants which have roots growing out of the container will be rejected.

2.07 MYCORRHIZAL FUNGAL INOCULANT

A. Mycorrhizal fungal inoculant shall be live spores packaged in plastic packets. At minimum each packet of inoculant shall contain the following:

1. Live spores of VA Endomycorrhizal fungi: Vesicular-Arbuscular mycorrihizae fungi, minimum of 8 species.

2. Live spores of Ectomycorrhizal fungi: including ***Pisolithus tinctorius***.

B. Mycorrhizal fungal inoculant shall be manufactured by Plant Health Care Incorporated, 440 William Pitt Way, Pittsburgh, PA 15238, telephone, (800) 421-9051; Horticultunral Alliance, 2946 Louise Street, Sarasota, FL 34237, (800) 628-6373; BioPlex Organics, 2213 Huber Drive, Manheim, PA 17545 (800) 441-3573, or approved equal.

2.08 PLANTING BACKFILL MIX

A. Planting soil mix shall he an approved loam borrow as specified in Section 02910 - Planting Soils, of this Specification and that has been pH adjusted according to particular planting applications and improved through the addition of organic matter as recommended by testing results for the particular species being planted.

1. Planting mix for rose shrub beds shall be 1/3 sand, 1/3 amended loam and 1/3 peat moss, thoroughly mixed and compacted to 85% maximum dry density.

2.09 MULCH

A. Mulch shall be aged pine-bark mulch meeting the Specifications of the MHD Standard specifications for Aged Pine Bark Mulch, M6.04.5.

2.10 WATER

A. The Contractor shall provide labor and water required to establish plants. During the maintenance period the Contractor shall water as required to insure that soil moisture is maintained to a depth of six inches or greater at all times.

2. Watering shall be done in a manner that will provide uniform coverage, prevent erosion due to application of excessive quantities over small areas, and prevent damage to the finished surface by the watering equipment. The Contractor shall furnish sufficient watering equipment to maintain required water levels in the soil.

PART 3- EXECUTION

3.01 PLANTING - GENERAL

A. Furnishing and planting of plant material shall include, but is not limited to placing of weed barrier, digging of planting pits, furnishing the plants as specified as well as the labor of planting, fertilizing, and maintenance.

1. Loam for planting beds is placed and amended under Section 02901 - Planting soils.

B. Tree Planting

1. Contractor shall locate all existing underground utilities that are within 10 feet of the proposed planting pits and notify the Owner's Representative of any conflicts prior to digging plant pits.

2. It shall be the Contractor's option to place the weed barrier before or after tree planting.

C. Seasons for Planting:

1. Deciduous Plants - March 15 to May 15; October 10 to December 15
2. Evergreen Plants - September 1 to November 15; March 15 to May 1

D. Notify the Owner's Representative three working days prior to the proposed arrival of plant material on the site. Plants delivered to the site and not planted within 24 hours of delivery shall have their root balls covered with mulch and shall be watered on a daily basis such that root balls are kept moist throughout.

3.02 PLANTING OF TREES

A. Locations for trees shall be staked on the ground by the Contractor for approval by the Owner's Representative before any plant pits are dug. Notify the Owner's Representative no less than 3 days prior to desired date of inspection of staking to schedule site visit.

1. Circular plant pits shall not be required provided that the minimum dimension between the edge of the pit and the face of the rootball is not less than required by this Section 02950 - Planting.

2. All plant pits dug with a machine shall have the sides of the holes scraped with hand shovels to prevent glazing on compaction of the sides of the hole. Remove and stockpile excavated loam for reuse as backfill for plant pit. All subsoil excavated from the bottoms of planting pits shall be removed from the site.

3. Plant pits shall be dug to the dimensions shown on the Contract Documents.

4. Remove all soil from around the root flare of the stem of the plant and from the top of the rootball to determine the true depth of the rootball. Plants that have been planted such that root flares are buried will be rejected.

5. Plant rootballs must be damp and thoroughly protected from sun and wind from the beginning of the digging operation, during transportation, and at the site until the final planting.

6. Trees shall be placed in the center of plant pits, plumb, with the crown of their

roots exposed and located above the surrounding finish grade.

7. Prior to completion of planting installations, remove rope and cut wire baskets from the top 1/3 of the root balls. Pull burlap away from the trunk or stem of the plant and cut burlap from the top 1/3 of the root balls.

8. Planting soil shall he backfilled with approved planting soil to the full depth of the planting pit. Eliminate air pockets and compact the soil by flooding the tree pit within 2 hours of planting installation. After water has drained from the planting pit and planting backfill has dried enough additional planting soil shall be spread in pit or bed to bring the finished surface of the planting pit or bed to grades shown on the Contract Documents. A saucer shall he formed around each plant at a depth of 3 inches for trees.

9. All trees shall be inoculated with mycorrhizal fungi. Inoculant shall be added after the trees have been placed in their holes. Open the required number of packets for each plant and thoroughly mix the inoculant powder into the upper 10 inches (250 mm) of backfill soil.

    a. The application rates for mycorrhizal fungal packets shall be in accordance with the manufacturers recommendations.

B. Contractor shall keep trees plumb and upright at all times.

C. Pruning:

1. As directed by the Owner's Representative, each plant shall be pruned in accordance with the workmanship requirements of "Pruning Standards" for Class I, fine pruning, to preserve the natural character of the plant.

2. Tree pruning, as required, shall be undertaken to the full height of affected trees.

3. All dead wood or suckers and all broken or badly bruised branches shall he removed. Never cut a leader.

D. In the event that rock or underground construction work or obstructions are encountered in any plant pit or bed excavation work, alternate locations will he selected by the Owner's Representative. Relocation of plant pits or beds shall be provided at no additional cost to the Owner. Provide the Owner's Representative with no less than 48 hours notice of obstruction so that a site visit can be scheduled to establish new locations for plants.

E. Absolutely no debris may be left on the site. Repair any damage to site as directed by the Owner's Representative, at no additional cost..

3.03 MULCH

A. Provide 3" of mulch continuous on planting beds.

3.04 WATERING

A. Plants shall be watered immediately following planting as necessary to thoroughly moisten rootball and plant pit loam and thereafter shall be inspected frequently for watering needs and watered, as required, to provide adequate moisture in the planting pit. The Contractor shall inspect tree pits 24 hours after initial watering to confirm that they are draining properly. If surface water or excessively saturated plant pit soils exist the Contractor shall immediately notify the Owner's Representative. The Owner's Representative will recommend remedial measures based upon site conditions.

3.05 MAINTENANCE

A. Maintenance shall begin immediately after each plant is planted and shall continue for a minimum 30-day period, and afterwards as necessary to ensure establishment through the one-year guarantee period.

B. Maintenance shall consist of keeping the plants in a healthy growing condition and shall include but is not limited to watering, weeding, cultivating, pruning, re-mulching, tightening and repairing of guys, straightening of trees to a plumb position, removal of dead material, resetting plants to proper grades or upright position, and maintaining the planting saucer.

1. Plants shall he inspected for watering needs at least twice each week and watered to promote plant growth and vitality.

2. For trees in lawn or mulched beds, apply water to the ground surface directly under the canopy. Water shall he applied at a sufficiently slow rate to prevent run off from the soil surface but great enough to equal 0.2 inches of water per square foot of canopy area per hour for 5 hours per week.

3. Planting beds and individual plant pits shall be kept free of weeds, and mulch shall be replaced as required to maintain the specified layer of mulch. Beds and individual pits shall be neat in appearance and maintained to the designed layout.

4. Plants that die during the maintenance period shall be removed and replaced by the Contractor during that growing season, unless directed otherwise by the Owner's Representative.

5. Spraying of insecticides or herbicides shall be done by State-licensed professionals. Spraying for insects, pests and diseases shall conform to the National Arborist Association Standards under the section entitled “Standards

for Pesticide Application Operations", as currently adopted and as approved by the Landscape Architect. All insecticides, pesticides, and herbicides shall be EPA-approved and shall conform to the requirements MCRG: Massachusetts Control Recommendation Guide for Insect, Disease, and Weed Pests of Shade Trees and Woody Ornamentals, latest edition, University of Massachusetts, Amherst, College of Food and Natural Resources.

C. During the maintenance period, any decline in the condition of plantings shall require the Contractor to take immediate action to identify potential problems and undertake corrective measures.

3.06 ACCEPTANCE

A. Upon completion of all planting work, the Contractor shall request in writing that the Owner's Representative inspect the planting work.

B. Acceptance Standards: If plant material is reviewed when it is in full leaf, leaves shall be plump with water with a shape indicative of the species and shall be free of insect, pest and disease damage. Twigs shall have living cambium for their full length. Twigs and branches shall have a full bud set for their full length, including terminal buds. Trunks and branches shall be free of frost cracks; sun scald; damage due to insects, pests, and disease; structural defects; and damage resulting from machinery or tools. Plant material inspected and reviewed when the plants are not in full leaf shall have twigs, branches and trunks meeting the above requirements. All plants regardless of the season of review shall have a minimum of 75 percent healthy, balanced branching structure with a healthy terminal leader(s) with viable terminal bud(s).

C. If any number of plants do not meet these Acceptance Standards at the time of inspection, or if in the Owner's Representative's opinion, workmanship is unacceptable, written notice will be given by the Owner's Representative to the Contractor in the form of a punch list which itemizes necessary planting replacements and/or other deficiencies to be remedied. All plants that do not meet these Acceptance Standards shall be removed from the project within seven days of receipt of the punch list. Replacements shall conform in all respects to the Specifications for new plants and shall be planted in the same manner.

3.07 GUARANTEE

A. Trees and shrubs shall be guaranteed for one year from the date of Substantial Completion of the entire project.

B. At the end of the guarantee period, a final inspection will be held to determine whether any replacements are required. Each plant shall he plumb, shall have a character that is natural for its species as determined by the Owners Representative, and shall conform to the Acceptance Standards described in this Section 02950 - Planting. Plants found to be unacceptable shall be removed promptly from the site and replaced according to this Section 02950 - Planting. Replacements plants shall be guaranteed for an additional year.

C. All replacements shall be plants of the same kind and size specified in the Plant List. The cost shall be borne by the Contractor, except for replacements due to vandalism.

END OF SECTION

SECTION 03300

CAST IN PLACE CONCRETE

PART 1 - GENERAL

1.01 GENERAL PROVISIONS

A. Attention is directed to the Contract and General Conditions and all Sections within Division I which are hereby made a part of this Section of the Specifications.

1.02 DESCRIPTION OF WORK

A. Work Included: Provide labor, materials and equipment necessary to complete the work of this Section, including but not limited to the following site improvements:

1. Cast-in-place retaining walls, steps and seat wall
2. Concrete Paving
3. Footings
4. Anti-skateboard hardware attached to 48' length of seat wall and step wing walls at basketball court.

B. Related Work:

1. Section 02200 - Earthwork
2. Section 02510 - Bituminous Concrete Paving
3. Section 02830 - Chain Link Fence
4. Section 02800 - Site Improvements
5. Section 02860 - Play Equipment

1.03 SUBMITTALS

A. Submit the following in accordance with Section 01300 - Submittals.

1. Concrete mix designs. Concrete mix design submittal shall include the following information:

(a) Proportions of cement, fine and coarse aggregate, and water.
(b) Water cement ratio, design strength, slump and air content.
(c) Type of cement and aggregates.
(d) Type and dosage of all admixtures.
(e) Percent of polypropylene fiber
(f) Range of ambient temperature and humidity for which the design is valid..
(g) Certification by ready-mix plant of psi of concrete mix design.

2. Submit Product data for the following:

(a) Curing materials.

(b) Joint fillers, Sealants, and Sealant Primers: Provide manufacturer's product data and manufacturer's installation instructions. Provide manufacturer's color choices for sealant.
(c) Form materials and form-release agents.
(d) Steel reinforcement and reinforcement accessories.
(e) Expansion Joint filler and sealant.

B. Steel Reinforcement Shop Drawings: Details of fabrication, bending, and placement, prepared according to ACI 315, "Details and Detailing of Concrete Reinforcement." Include material, grade, bar schedules, stirrup spacing, bent bar diagrams, arrangement, and supports of concrete reinforcement.

C. Submit results of concrete cylinder tests

1.04 TESTING

A. The Contractor shall engage an independent laboratory acceptable to the Owner shall pay for testing of concrete as follows:

1. 4 (2 each) cylinders of concrete for strength testing of concrete utilized in concrete retaining walls.

1.05 REFERENCE STANDARDS

A. Comply with applicable requirements of the following standards. Where these standards conflict with other specified requirements, after notifying the Architect the most restrictive requirement shall govern.

1. American Concrete Institute (ACI)

212 Guide for Use of Admixtures in Concrete
301 Specifications for Structural Concrete for Buildings
305 Hot Weather Concreting
306 Cold Weather Concreting
316 Recommended Practice for Construction of Concrete Pavements and Concrete Bases
347 Recommended Practice for Concrete Formwork

2. American Society for Testing and Materials (ASTM):

A615 Deformed and Plan Billet-Steel Bars for Concrete Reinforcement
C33 Concrete Aggregates
C94 Ready-Mixed Concrete
C143 Slump of Portland Cement Concrete
C150 Portland Cement
C171 Sheet Materials for Curing Concrete
C260 Air-Entraining Admixtures for Concrete
C309 Liquid Membrane-Forming Compounds for Curing Concrete
C494 Chemical Admixtures for Concrete
C920 Elastomeric Joint Sealants

C920 Use of Elastomeric Joint Sealants
D1557 Moisture - Density Relations of Soils and Soil-Aggregate Mixtures Using 10-lb. (4.5-kg) Rammer and 18-in. (457-mm) Drop

3. Commonwealth of Massachusetts Highway Department, Standard Specifications for Highways and Bridges, latest edition, Construction and Materials specifications for Concrete.

1.06 QUALITY ASSURANCE

A. Installer Qualifications: An experienced installer who has completed concrete Work similar in material, design, and extent to that indicated for this Project and whose work has resulted in construction with a record of successful in-service performance.

B. Maintain field records of time, date of placing, curing, and removal of forms of concrete in each portion of the work.

1.07 PROJECT CONDITIONS

A. Establish and maintain required lines, surfaces, and elevations.

B. Do not install concrete work over wet, saturated, muddy, or frozen subgrade.

C. Do not install concrete when air temperature is below 40 degrees F. Use of calcium chloride, salt, or any other admixture to prevent concrete from freezing is prohibited.

D. Protect adjacent work. Provide temporary barricades and warning lights as required for protection of project work and public safety.

E. Calcium chloride, salt, or any other admixture to prevent concrete from freezing is prohibited.

1.08 DELIVERY, STORAGE AND HANDLING

A. Deliver, store, and handle steel reinforcement to prevent bending and damage.

PART 2 - PRODUCTS

2.01 BASE COURSES

A. Base material under footings, steps and walls shall be as specified under Section 02200, Earthwork.

2.02 CONCRETE MIX

A. Provide ASTM C94 ready-mixed concrete. Batch mixing at site is not acceptable. Use ACI 301 Method 1 or Method 2 to determine mix proportions.

B. Concrete shall conform to ASTM C94. One copy of the certificate of delivery shall be submitted immediately upon arrival of each load of concrete at the site.

1. Indicate water added to mix at job site on each delivery ticket. Show quantity of water added. Site water tempered mixes exceeding specified slump range will be rejected as not complying with specification requirements.

C. Unless other indicated on the Drawings, minimum 28 day compressive strength shall be 4,000 psi.

D. Concrete Aggregate: Provide ASTM C33 normal weight aggregates, 3/4" maximum size, clean, uncoated crushed stone or gravel coarse aggregate free of materials which cause staining or rust spots; fine aggregate shall be clean natural sand.

E. Polypropylene reinforcement fibers shall be added at the rate of 1.0 lb/cubic yard of concrete.

1. Provide polypropylene fibrillated fibers of multi-design ASTM C1116C/116M, Section 4.1.3 Type III. Fibers must be made of 100% virgin polypropylene fibrillated fibers of multi-design gradation as manufactured by Fibermesh, Synthetic Industries, 4019 Industry Drive, Chattanooga, Tennessee 37416; Masterfiber M70 by BASF, or an approved equal.

F. Concrete slump shall be no less than 2" nor greater than 4" determined in accordance with ASTM C143.

G. Concrete shall be air entrained type. Air content by volume shall be 4 to 6%.

H. Concrete shall contain a water reducing agent to minimize the water cement ratio of the mix, at the specified slump.

I. No calcium chloride or admixtures containing calcium chloride shall be added to the concrete. No admixtures other than those specified shall be used in the concrete without the specific written permission of the Engineer.

J. No concrete shall be placed by pumping methods.

2.03 CEMENT

A. Cement shall be Portland Cement conforming to ASTM C150, Type 2.

2.04 ADMIXTURES

A. Except as otherwise specified, use of concrete admixtures shall conform to ACI 212.

1. Air entraining agent shall conform to ASTM C260.

2. Water reducing agent shall conform to ASTM C494, Type A.

3. Water reducing agent-retarder shall conform to ASTM C494, Type D.

2.05 WATER

A. Water shall conform to ASTM C94, Section 4.1.3.

2.06 STEEL REINFORCEMENT

A. Steel reinforcing bars shall conform to ASTM A615, Grade 60.

2.07 FORMWORK

A. All concrete work shall be formed.

B. The form facing materials shall produce a smooth, hard, uniform texture on the concrete to match finish of existing wall to remain.

C. Form material for walls shall be plywood, tempered concrete-form grade hardboard, or metal, capable of producing the required finish.

D. Forms shall be true to line and free of warp and shall be of sufficient strength when braced to resist the pressure of concrete during placement within the allowable tolerances.

E. Surfaces of the forms to be in contact with concrete shall be coated with non-staining form release compound, free of kerosene, oil and wax. Wetting or coating with grease or oil will not be accepted as a substitute.

F. Exposed concrete arises shall be chamfered. Chamfer shall be mitered at changes of direction.

G. Formwork for footings shall be metal, glass-fiber-reinforced plastic, paper, or fiber tubes that will produce surfaces with gradual or abrupt irregularities not exceeding specified formwork surface class. Provide units with sufficient wall thickness to resist plastic concrete loads without detrimental deformation

2.08 FORM RELEASE AGENT

A. Form-Release Agent: Commercially formulated form-release agent that will not bond with, stain, or adversely affect concrete surfaces and will not impair subsequent treatments of concrete surfaces.

2.10 FORM TIES

A. Form Ties: Factory-fabricated, removable or snap-off stainless steel or fiberglass -reinforced plastic form ties designed to resist lateral pressure of fresh concrete on forms and to prevent spalling of concrete on removal.

B. Furnish units that will leave no corrodible metal closer than 1 inch to the plane of the exposed concrete surface or that, when removed, will leave holes not larger than 1 inch in diameter in concrete surface.

2.10 CURING MATERIALS

A. Type 2 Liquid Membrane-Forming Compounds for Curing Concrete shall be used in accordance with ASTM Designation C-309-58 or AASHO Designation M140-57 or the latest revisions thereof.

2.11 EXPANSION JOINTS

A. Expansion joints

1. Joint filler shall be preformed filler conforming to ASTM D 1751 or AASHTO M 213. Joint filler shall be recessed ½" to receive sealant, and shall be one piece, extending to the full depth and width of the joint.

a. Provide W.R. Meadows “Snap-cap” or equal to provide ½" recess.

2. Seal joints horizontal joints with a non-staining, two component polyurethane based sealant conforming to Fed. Spec. TT-S-00227, Class A, and ASTM C920, Type M, Grade P, Class 25, Use T, with a Shore A Hardness of 30±5 or better.

3. Colors of sealant shall be selected from manufacturer’s standard colors to match concrete color as closely as possible.

2.12 CONTROL JOINTS

A. Tool control joints to not less than 25% of slab depth.

B. Unless otherwise indicated on the Drawings, control joints shall be located at 10 feet o.c. maximum.

C. Reinforcing shall continue through control joints.

2.13 ANTI-SKATEBOARD HARDWARE

A. Provide and install anti-skateboard hardware on seatwall at basketball court.

B. Hardware shall be clear anodized silver grey aluminum, specifically recommended by the manufacturer for 3/4" chamfered edges, as supplied by Barrett Robinson (1-80-848-6666) or equal.

C. Hardware shall be attached with epoxy and vandal resistant anchors, as recommended by the hardware manufacturer.

PART 3 - EXECUTION

3.01 GRADING

A. Make any corrections necessary to base course material furnished and installed under SECTION 02200, Earthwork, to bring base material to the sections and elevations shown on the Contract Drawings.

B. Existing subgrade material which will not readily compact as required shall be removed

and replaced with satisfactory materials. Additional materials needed to bring subgrade to required line and grade and to replace unsuitable material shall be material conforming to Section 02200 Earthwork.

3.02 FORMWORK

A. Formwork shall be constructed, braced and tied so that the formed surfaces of the concrete will be perfectly true, smooth and to the dimensions shown on the Drawings, within the tolerances for formed surfaces as specified in ACI 301.

B. Forms shall not be moved for seventy-two (72) hours after the Cement concrete has been placed, or for a longer period if directed by the Landscape Architect/Engineer. Extreme care shall be taken in removing forms in order that no damage will be done to the Cement concrete. Under no condition shall any bar, pick or other tool be used which depends upon leverage on the Cement concrete for removal of the forms.

3.03 JOINTING

A. Unless otherwise indicated on the Drawings, expansion joints shall be located at 30 feet o.c. maximum and at all curbs and walls.

3.04 REINFORCEMENT

A. Reinforcing bars showing cracks after bending shall be discarded and replaced with new material conforming to this Section at no additional cost to the Owner.

B. Reinforcing shall be thoroughly cleaned of loose mill and rust scale, dirt, ice, and other foreign material which may reduce the bond between concrete and reinforcing. Where there is a delay in placing concrete after reinforcement is in place, bars shall be reinspected and cleaned when necessary.

C. After forms have been coated with form release agent, but before concrete is placed, reinforcing steel shall be securely wired in exact position called for, and shall be maintained in that position until concrete is placed and compacted.

D. Except as otherwise noted, laps at joints in welded wire fabric reinforcement shall be at least 6 inches and shall be securely tied with wire.

E. Except as otherwise specified, reinforcing steel shall be spliced by lapping bar ends, placing bars in contact, and tightly wiring. Minimum lap of spliced bars shall conform to ACI 318.

H. Unless otherwise indicated on the Drawings, reinforcing shall extend within 2 inches of formwork and expansion joints. Reinforcement shall continue through construction joints.

3.05 COLD WEATHER CONCRETING

A. Procedures shall be in accordance with provisions of ACI 306.

3.06 HOT WEATHER CONCRETING

A. Procedures shall be accordance with the provision of ACI 305.

B. Concrete just placed shall be protected from the direct rays of the sun and the forms and reinforcement just prior to placing shall be sprinkled with cold water. Every effort shall be made to minimize delays which will result in excessive mixing of the concrete after arrival on the job.

C. During periods of excessively hot weather (95 degrees or above) ingredients in the concrete shall be cooled insofar as possible and cold mixing water shall be used to maintain the temperature of the concrete at permissible levels all in accordance with the provisions of ACI 305. Any concrete with a temperature above 95 degrees F., when ready for placement will not be acceptable and will be rejected.

D. Temperature records shall be maintained throughout the period of hot weather giving air temperature, general weather conditions (calm, windy, clear, cloudy, etc.) and relative humidity. Records shall include checks on temperature of concrete as delivered and after placing in forms. Data should be correlated with the progress of the work so that conditions surrounding the construction of any part of the structure can be ascertained.

3.07 CONCRETE PLACEMENT

A. Before placing concrete, forms and space to be occupied by concrete shall be thoroughly cleaned, and reinforcing steel and embedded metal shall be free from dirt, oil, mill scale, loose rust, paint and other material which might tend to reduce bond.

B. Existing concrete, earth and other water permeable material against which new concrete is to be placed shall be thoroughly damp when concrete is placed. There shall be no free water on the surface.

C. Concrete which has set or partially set before placing shall not be employed. Retempering of concrete will not be permitted.

D. Segregation of the concrete shall be prevented during handling; should any segregation occur, the concrete shall be remixed before it is placed. Concrete shall not be allowed to drop freely more than 4 feet. If the free drop to the point of placement must exceed 4 feet, the Contractor shall obtain the approval of the Engineer for the proposed method of depositing the concrete. The concrete shall not be required to flow over distances greater than 3 feet in any direction in the forms or on the ground, unless otherwise permitted by the Engineer.

E. Concrete shall be thoroughly spaded, and tamped, and vibrated to secure a solid homogeneous mass, thoroughly worked around reinforcement and into corners of forms.

3.08 FINISHING

A. Sidewalk paving and exposed surface of curbs: Broom Finish.

B. Exposed tops of footings: Smooth trowel exposed surface. Provide light broom finish.

C. Exposed surfaces of concrete walls and curb/walls: Hand-rubbed smooth finish.

1. It is the intention that all concrete be sound and dense. Concrete exhibiting defects on surfaces exposed to public view shall be removed and replaced or repaired in accordance with method that achieves a surface which is acceptable to the Landscape Architect. All such removal or repairs shall be at the Contractor's expense.

2. Formed concrete surfaces which will be visible after completion of the structure shall have a "smooth form hand-rubbed" finish, as defined by ACI 301.

(a) At formed surfaces exposed to view, chip off fins and other projections and trowel patch all voids, honeycombs and air pockets exceeding ½" in any dimension.

(b) Pull tie-rods and patch voids formed by tie-rod cones flush with adjacent surfaces.

3.09 CURING AND PROTECTION

A. It is essential that concrete be kept continuously damp from time of placement until end of specified curing period. It is equally essential that water not be added to surface during finishing operations, and not earlier than 24 hours after concrete placement. Between finishing operations, surface shall be protected from rapid drying by a covering of waterproofing paper. Surface shall be damp when the covering is placed over it, and shall be kept damp by means of a fog spray of water, applied as often as necessary to prevent drying, but not sooner than 24 hours after placing concrete. None of the water so applied shall be troweled or floated into surface.

B. Walls and vertical surfaces shall be cured by maintaining wood forms continuously wet during curing period, or by wrapping with continuous .006" polyethylene with taped joints.

C. Concrete pavement surfaces shall be cured by completely covering with curing paper or by use of a curing compound.

1. Concrete cured using curing paper shall be completely covered with paper with seams lapped at least 2" and sealed with tape. During curing period, surface shall be checked frequently, and sprayed with water or curing compound as applicable, as often as necessary to prevent drying, but not earlier than 24 hours after placing concrete.

2. Concrete cured with a curing compound shall have curing compound applied at a rate of 200 square feet per gallon in two applications perpendicular to each other.

D. Curing period shall be 7 days, minimum.

3.10 PROTECTION OF CONCRETE SURFACES

A. Concrete surface shall be protected from traffic or damage. If necessary 1/2 inch thick plywood sheets shall be used to protect the exposed surface.

3.11 ANTI-SKATEBOARD HARDWARE

A. Install anti-skateboard hardware on seat wall and step wing walls at basketball court, at 4' o.c. maximum using manufacturer supplied adhesive and anchors, and according to manufacturer's instructions.

END OF SECTION

SECTION 09614

DETECTABLE WARNING PANELS

PART 1 - GENERAL

1.01 GENERAL PROVISIONS

A. All of the Contract Documents, including the Contract Form, General Provisions, General Conditions, Supplemental Conditions, and all Attachments to the General Provisions, and Division 1 - General Requirements, apply to the work of this Section.

1.02 SCOPE OF WORK

A. Provide all equipment and materials, and do all work necessary to furnish and install wet-set Detectable Warning Panels as indicated on the Drawings and as specified.

1.03 RELATED WORK

A. Section 02700 - Granite Curbing.
B. Section 03300 - Cast-in-Place Concrete.

1.04 REFERENCE STANDARDS AND SPECIFICATIONS

A. Comply with applicable requirements of the following standards. Where these standards conflict with other specified requirements, the most restrictive requirements shall govern.

B. Detectable warning surface panels shall comply with detectable warnings on walking surfaces section of the American with Disabilities Act Section 705.1 of the 2010 ADA Standards for Accessible Design (ADAAG).

C. American Society for Testing and Materials (ASTM):

1. ASTM C-543 Chemical Resistance
2. ASTM D-1501 Simulated Sunlight
3. ASTM D-756 Procedure “E” Accelerated Service Test
4. ASTM D-570 Water Absorption

1.05 SUBMITTALS

A. Product Data: Submit manufacture’s literature describing products, installation procedures and maintenance.

B. Samples: Submit a sample of the panel proposed to be used.

1.06 QUALITY ASSURANCE

A. Provide wet-set Detectable Warning Panels and accessories as produced by a single manufacturer with a minimum of three (3) years experience in the manufacturing of wet-set Detectable Warning Panels.

1.07 DELIVERY, STORAGE AND HANDLING

A. Detectable Warning Panels shall be suitably packaged or crated to prevent damage in shipment or handling..

1.08 PROJECT CONDITIONS

A. Cold Weather Protection: Maintain minimum temperature of 40°F in areas to receive Place Detectable Warning Panels for at least 24 hours prior to installation, during installation, and for not less than 24 hours after installation.

1.09 GUARANTEE

A. Detectable Warning Panels shall be guaranteed in writing for a period of five (5) years from date of final completion. The guarantee includes defective work, breakage, deformation, fading, and loosening of panels.

PART 2 - PRODUCTS

2.01 MANUFACTURER

A. The Detectable Warning Panel specified is based on ADA Solutions, Inc. product (1-800-372-0519) or approved equal.

B. Color: Shall be chosen by the Owner from manufacturer's standard color choices.

2.02 DETECTABLE WARNING PANELS

A. Dome geometry of panels shall be in accordance with ADA Regulations for Detectable Warning on Curb Ramps with raised truncated domes with a diameter of nominal 0.9", a height of nominal 0.2" and a center to center spacing of 1.6" minimum and 2.4" maximum.

B. Detectable Warning Panels shall be a homogenous glass and carbon reinforced composite which is colorfast and UV stable.

1. Truncated domes shall be fiberglass reinforced.

2. Color shall be uniform throughout the interior and exterior of the material and shall not depend upon surface coating.

3. Thickness of units shall be 0.375" nominal with a 5/8" thick x 1" wide perimeter

flange.

C. Detectable Warning Panels shall be field replaceable without cutting existing concrete or pouring new concrete.

D. Slip resistance of Detectable Warning Panels when tested in accordance with ASTM C-1028 shall not be less than 0.80.

E. Chemical resistance of Detectable Warning Panels when tested in accordance with ASTM C-543 to withstand without any degradation or discoloration: 1% Hydrochloric Acid, Acetic Acid, Sulfuric Acid, Sodium Chloride, Sodium Hydroxide, Sodium Sulfate, Sodium Carbonate, Kerosene and Oil.

F. Detectable Warning Panels when tested in accordance with ASTM D-635 shall not sustain burning and be self extinguishing.

G. Detectable Warning Panels when tested in accordance with ASTM G-21 shall not promote fungus growth.

H. Detectable Warning Panel material surface flammability when tested in accordance with ASTM E-162 shall be less than 25.

I. Detectable Warning Panel smoke density when tested in accordance with ASTM E-662-03 shall be less than 0.5 at 1.5 minutes and less than 15 at 4 minutes.

2.03 MECHANICAL PROPERTIES

A. The panel shall meet the following for mechanical properties:

Test Method	**Mechanical Properties**	**Average Value**
ASTM C-170-99	Compressive Strength	28,900 PSI
ASTM C-580-02	Flexural Strength	29,300 PSI
ASTM C-307-99	Tensile Strength	11,600 PSI
ASTM C-1028	Slip Resistance	1.18 Dry, 1.05 Wet
AASHTO-H20	Load Bearing at 16,000#	No Damage

PART 3 - EXECUTION

3.01 INSTALLATION

A. Concrete shall be placed and finished true to line and grade and smooth to the required dimensions and gradient as indicated in the Drawings and as specified in Section 03300, Cast-in-Place Concrete.

B. Immediately after finishing concrete, an electronic level shall be used to verify that gradient and slope of finished concrete does not exceed maximum slope and gradient as indicated in the Drawings. No concrete shall be removed in the area to accept the panel.

C. Detectable Warning Panels shall be tamped (or vibrated) into the fresh concrete to ensure that the level of the panel is flush to the adjacent concrete surface. The embedment process shall not be accomplished by stepping on the panel as this may cause uneven setting which can result in air voids under the panel surface. The base of the truncated domes shall be set flush to the adjacent surface to permit proper drainage and eliminate tripping hazards between adjacent finishes.

D. Immediately after panel placement, the panel elevation shall be checked to be flush wih adjacent concrete. The elevation and slope shall be set as indicated in the Drawings. Ensure that the surface of the panel is flush with the surrounding concrete. Finish concrete around the panel's perimeter with a steel trowel.

E. Following the concrete curing stage, protective plastic wrap is to be removed from the panel surface by cutting the plastic wrap with a sharp knife tight to the concrete / panel interface.

3.02 CLEANING, PROTECTION AND MAINTENANCE

A. Protect panels against damage during construction period in compliance with manufacturer's specifications.

B. Protect panels against damage from rolling loads following installation by covering with plywood or hardwood.

C. Clean panels not more that four days prior to date scheduled for inspection intended to establish date of substantial completion.

D. Comply with manufacturer's maintenance instructions for cleaning and maintaining panel surface.

END OF SECTION

SECTION 11485

SPORTS NETTING

PART 1 - GENERAL

1.01 SUMMARY

A. This section covers all labor and materials required to install sports netting.

B. The contractor is responsible for the purchase and installation of all netting.

1.02 RELATED SECTIONS

A. 02825 – Chain Link Fencing.

1.03 SUBMITTALS

A. The following information shall be submitted prior to installation of specified work.

1. Standard printed specifications and diagrams or drawings depicting installation directions and dimensions for poles, netting, and cable support system.

1.04 QUALITY ASSURANCE

A. The contractor shall only accept bids from those vendors or manufacturers that have been pre-approved or identified as approved equal.

B. Regulatory Requirements

1. Barrier netting system shall meet the requirements of the jurisdictional code authorities.

2. Furnish all calculations, engineer's stamps (per State registration), drawings, and other items required by code authorities to obtain approval of the installation.

1.05 WARRANTY

A. The netting manufacturer shall provide a warranty to the owner that covers defects in materials and workmanship of the netting for a period of 1 year from the date of substantial completion.

PART 2 – PRODUCTS

2.01 The basis of design for this system is Beacon Barrier Net – Lift & Tension by Beacon Athletics 8233 Forsythia Rd. Middleton, WI 53562 (800)-747-5985.

A. Contact: Elliot Hansen - Project Services Group.

2.02 SPORTS NETTING

A. The contractor is responsible to provide and install all netting as specified by these specifications and shown on the project drawings.

B. The netting is available from the following:

1. Beacon Athletics, Tel.: (800)-747-5985.

C. Color shall be black.

1. Beacon Athletics. Model (#24) twisted, knotted 1-3/4” square Nylon.

2. Edging shall be combination sewn poly-rope and sewn vinyl border with grommets as specified by the manufacturer for the system as designed.

D. MATERIALS

1. Finish: UV-Stabilized and Heat-Set.

2. Break-Strength: 233lb. minimum test. (Break-Strength is determined by pulling one mesh unit until it breaks at the weakest point, regardless of break location.)

2.03 POLES

A. Diameter: manufacturer’s standard based on design wind loads.

B. Material: A500 steel.

C. Finish: High Performance Acrylic Paint – Black.

2.04 SUPPORT CABLES AND HARDWARE

A. Cables:

1. 7 x 19 or 1 x 7 strand galvanized steel with fully galvanized steel components as called for in approved shop drawings.

2. 5/16” Dyneema tension cables with composite blocks and adjustment winches (where required).

B. Hardware:

1. Wall anchors and net-to-cable attachment as specified by the manufacturer for the system as designed.

PART 3 - EXECUTION

3.01 INSTALLATION OF SPORTS EQUIPMENT

A. The installation of the netting shall follow the directions of the manufacturer and/or vendor. Shop drawings must be submitted and approved prior to installation of equipment.

END OF SECTION

SECTION 13125

ALUMINUM BLEACHERS & PLAYERS BENCHES

PART 1- GENERAL

1.01 GENERAL PROVISIONS

A. All of the Contract Documents, including the Contract Form, General Provisions, General Conditions, Supplemental Conditions, and all Attachments to the General Provisions, and Division 1 - General Requirements, apply to the work of this Section.

1.02 SCOPE OF WORK

A. Work under this Section shall include all labor, materials, services, equipment, transportation and accessories and the performance of all operations necessary to complete the work of this Section, and as indicated on the Drawings and as specified.

B. The work shall include, but is not limited to, the following:

1. Furnish and install bleachers
2. Furnish & install players benches in dugouts.

1.03 RELATED SECTIONS

A. Section 02875 – Shade Shelters & Dugouts
B. Section 03300 – Cast-in-Place Concrete

1.04 SUBMITTALS

A. Manufacturer's shop drawings for bleachers and benches.
B. Manufacturer's literature demonstrating compliance with these Specifications.
C. Manufacturer's installation instructions.
D. Color charts of manufacturer's standard color choices.
E. Manufacturer's written warranties.
F. Manufacturer's maintenance instructions.

1.05 WARRANTY

A. Warranty shall guarantee bleachers & benches to be free from defect in materials and workmanship for period of 1 year under normal use.

B. Anodized finish of plank extrusions shall be covered by a 5 year warranty against loss of structural strength or finish deterioration due to exposure to weather conditions or UV rays.

PART 2 – PRODUCTS

2.01 BLEACHERS

A. Bleachers shall be National Recreation Systems non-elevated 5 row x 15' bleacher Model NA-0515ADA/CLR or equal.

B.

C. Benches shall be National Recreation Systems "PE Permanent Bench without Back, 15' long, or equal.

D. Manufacturer shall have a minimum of 10 years of experience in the design and manufacture of similar products.

E. Welders must conform to AWS standards.

F. Codes and standards to be met: 2003 International Building Code

2.02 DESIGN LOADS

A. Bleachers:

1. Live Loads: Uniform loading – Structure = 100 psf, Uniform loading – Seat and Foot Plank = 120 plf
2. Sway Loads: Perpendicular to seats: 10 plf; Parallel to seats: 24 plf
3. Guardrail Loads: Uniform vertical load: 100 plf; Uniform horizontal load: 50 plf; Concentrated horizontal load: 200 pounds
4. Wind Loads: Basic Design Speed: 150 mph

B. Benches:

1. Live Loads: Uniform loading – Structure 100 psf; Uniform Loading – Seat: 120 plf
2. Sway Loads: Perpendicular to seats: 10 plf; Parallel to Seats: 24 plf

2.03 BLEACHER FRAMES & PLANKS

A. Framework shall be pre-fabricated aluminum angle spaced at 6' intervals joined by means of aluminum angle cross-bracing.

B. Connections shall be shop welded, meeting AWS standards.

C. Seats shall be anodized aluminum with anodized end caps.

D. Guardrails shall be anodized aluminum tube with end plugs and elbows where required. All rails shall be secured to angle supports with galvanized fasteners. Top rails at sides, rear and front shall be 42" above the leading edge of seat or walking surface. Rear rail

support members shall be aluminum channel, side and front rail supports shall be aluminum channel.

2.04 STEEL FRAME ALUMINUM BENCHES

A. Framework shall be prefabricated galvanized steel spaced at 6'-0" intervals consisting of 2-3/8" OD schedule 40 pipe with seat support of ¼" x 3" hot-rolled steel bar (ASTM A-36). Embedded end of bench legs shall be formed to prevent the leg from twisting. No mechanical fastening of seat supports or legs support shall be permitted.

B. Shop connections shall be welded to meet AWS standards.

C. Seats shall be nominal 2 x 10 anodized aluminum with anodized end caps.

2.05 MATERIALS & FINISHES (BLEACHERS & BENCHES)

A. Framework:

1. Aluminum: Structural fabrication with aluminum alloy 6061-T6 mill finish. Each frame shall be unit-welded, using metal inert gas methods, under guidelines of the American Welding Society. After fabrication all steel shall be hot dipped galvanized to ASTM A-123 specification. All cross-bracing and horizontal bracing shall be aluminum angle 6061-T mill finish.

B. Extruded Aluminum:

1. Seat Planks: Aluminum alloy 6063-T6, clear anodized 204R1, AA-M10C22A31, Class II with a wall thickness nominally of .078" for impact and deformation resistance.

2. Tread & Riser Planks: Aluminum alloy 6063-T6, mill finish, nominal wall thickness of .078".

3. Guardrail Pipe: 1-5/8" OD Schedule 40 aluminum alloy 6105-T5, clear anodized 204R1, AA-M10C22A31, Class II.

C. Accessories:

1. Channel End caps: Aluminum alloy 6063-T6, clear, anodized 204R1.AA-M10C22A31, Class II.
2. Hardware: Bolts and nuts shall be hot-dip galvanized.
3. Hold Down clip assembly: Aluminum alloy 6063T-6, mill finish.
4. Joint Sleeve Assembly: Aluminum alloy 6061-T6, mill finish.

PART 3 – EXECUTION

3.01 INSTALLATION

A. Install bleachers and benches in accordance with manufacturer's written instructions, shop drawings and Contract Documents.

END OF SECTION

SECTION 16100

ELECTRICAL SERVICE SYSTEMS

PART 1 - GENERAL

1.01 SCOPE OF WORK

A. Labor, supervision, materials, tools, scaffolding, equipment, supplies, transportation and services for a complete and operational electrical system as specified shall be provided.

B. The Owner reserves the right to request references from all subcontractors and the right of final selection of Subcontractors.

C. Materials and equipment shall be installed in accordance with standards of the National Electrical Code, local codes, safety codes and ordinances.

D. Work under this Section shall include, but not be limited to:

1. New sports lighting system inclusive of all related control cabinets
2. Installation of underground duct-bank from the control cabinets to the new sports lighting equipment.
3. New electrical service equipment dedicated to the sports lighting system.
4. Grounding system.
5. Metal raceways.
6. PVC raceways.
7. Power Wiring.
8. Foundation coring and foundation penetrations.
9. Excavation, backfill, resurfacing to match existing conditions as required to complete the entire project inclusive of restoration of all landscaping, etc. Work to be coordinated by the General Contractor
10. Anyother system herein after called for or shown on the drawings.

E. The Contractor shall include as an Allowance in his/her bid for charges by the utility companies or other authorities for work done by them and charged to the Contractor, or for any other fees or expenses required by utility companies necessary to complete the work of this Contract. Refer to Division I, Section 01020 Allowances and the Bid Form for the amount of the Allowance.

F. The Contractor shall provide any additional labor and materials required by the utility company to complete the work of this Section, at no additional cost to the Owner.

G. All work performed under this Section shall be performed by a MA licensed Electrician.

H. The Contractor is required to apply and obtain all permits required for this work. The City of Waltham will waive all fees associated with these applications.

I. An EVERSOURCE Electric - Work Order Application will be submitted to EVERSOURCE for the work specified in this section and as indicated on the Drawings by the City of Waltham Wires Department.

1.02 ELECTRIC UTILITY

A. The Electric Utility for this project is EVERSOURCE Electric. All coordination with the Electric Utility is the responsibility of the Contractor. All work and materials for the electric service shall be in accordance with the requirements of the Electric Utility, and are to be met under this Section and included in the bid price of the Contractor. Contractor shall adhere to EVERSOURCE's *"Information and Requirements for Electric Service (2008 or later)"*.

1.03 EXAMINATION OF SITE

A. Before submitting a Bid, this Contractor must visit the job site to determine the conditions under which the work is to be done.

1.04 DRAWINGS AND SPECIFICATIONS

A. Drawings and specifications are complementary to each other. Any labor and material which is called for by either, whether or not by both, or which is necessary for the successful operation of all systems, shall be furnished and installed. Discrepancies should be brought immediately to the attention of the Engineer.

B. Plans and specifications for this project should be examined to determine the scope and character of the work, the building design and function, and the required coordination with the Electrical Contractor and other Trades before and during construction.

C. Shop drawings and submissions of materials shall be made within five (5) days after the signing of the Contract; they are to be bound by section and submitted as a complete section. Seven (7) copies for approval shall be provided: two (2) copies for the Electrical Contractor; one (1) copy for the Electrical Engineer; one (1) copy for the City of Waltham; One (1) copy for the Site Engineer and two (2) copies to be held by the Electrical Contractor until job completion, at which time they are to be bound in two (2) binders and transferred to the Owner.

D. This Contractor shall prepare an electrical set of coordination drawings to overlay with all other Trades. Drawings shall be prepared on translucent drawings to properly coordinate all of the other equipment to be installed. Prior to any installations, the Electrical Contractor must receive approval of drawings from the Engineer.

1.05 SUBMITTALS

A. Submit shop drawings and manufacturer's specifications for all materials to be furnished under this Section including:

1. Conduits and Wiring.
2. Panelboards.
3. Service Cabinets and Equipment.
4. Circuit Breakers.
5. Light poles and luminaries.
6. Wiring Devices and Receptacles.
7. Meter Sockets.
8. Grounding.

B. Submit samples of materials for use under this Section as directed by the Owner or Owner's Representative.

C. The Engineer's review shall be only for conformance with the design concept of the project and compliance with the specifications and Drawings. The responsibility of, and the necessity of, furnishing materials and workmanship required by the specifications and Drawings which may not be indicated on the shop drawings is included under the work of this Section.

1.06 INSURANCE

A. Insurance is to conform to the provisions and requirements as set forth in Information for Bidders Section.

1.07 CHANGES AND REVISIONS

A. Costs for changes and/or revisions shall be submitted to the Site Engineer with material and labor breakdown of charges and credits clearly itemized.

B. Work shall not be executed until approval has been received in writing from the Engineer.

1.08 WORKMANSHIP

A. Materials shall be new and shall conform to the standards of UL, Inc., in every case where such a standard has been established for the particular type of material in question. Work shall be executed in a workmanlike manner and a competent Foreman shall be provided for the entire project. After wires are pulled in and fixtures and equipment are installed, this Contractor shall make tests for performance, grounds, etc., and shall immediately remedy any defects. This Contractor shall provide equipment to be used for tests.

B. Work under this Contract must be so performed that the progress of the entire project, including work of all Trades, shall not cause delays or interference.

C. t will be the responsibility of the Electrical Foreman to instruct the Owner in the function, operation and maintenance of electrical systems and equipment. This is to be

done upon completion of the installation, before leaving the job site and to the satisfaction of the Owner and Engineer.

1.09 MANUFACTURERS' NAMES AND TRADE NAMES

A. Throughout the specification types of materials may be specified by manufacturer's name and catalogue number in order to establish standards of performance and quality, and not to limit competition.

1.10 MATERIAL STORAGE AND OFFICE SPACE

A. This Contractor shall maintain at his own expense, where directed on the premises, neat covered storage for material and equipment, and office space where drawings and specifications shall be kept for records.

B. Equipment or material damaged during the construction period shall be replaced at this Contractor's expense.

1.11 GUARANTEE

A. Materials and labor incorporated in the work are to be guaranteed against defects for a period of one (1) year from date of substantial completion. This Contractor shall correct such defects that occur within the guarantee period and to the satisfaction of the Engineer without cost to the Owner, within a twenty-four (24) hour period.

B. This Contractor shall not be responsible for failures through normal usage, nor for those caused by neglect or abuse on the part of the Owner or his employees.

1.12 RELATED WORK

A. Following related work is not included in this Section and will be performed under the supervision of the electrical contractor by the general contractor.

1. Excavation, backfill and resurfacing required for underground electrical systems.
2. Major cutting and patching.

1.13 OPERATING INSTRUCTIONS

A. This Contractor shall furnish three (3) Operating and Maintenance Manuals outlining in detail the operational features of the following systems:

1. Sports lighting system.
2. Electrical distribution equipment.
3. Metal raceway and PVC system.
4. Cable.
5. Control Cabinet

1.14 INSPECTIONS AND PERMITS

A. Obtain all necessary permits and licenses, and pay all fees for permits and inspections. Permit fees are the responsibility of the Contractor as part of his bid, as is all coordination with the local utility, EVERSOURCE.

B. The Contractor shall contact the City to arrange for inspection.

1.15 RECORD DRAWINGS

A. A set of record drawings shall be maintained at the job site for reference by the Engineer. Weekly, the Electrical Foreman will note changes and review drawings periodically with the Engineer. Changes, including feeders, lighting, power, panel schedules, duct-bank changes, etc., shall be recorded on the drawings. At the conclusion of the construction this Contractor shall order from the Engineer a three and one-half (3.5) inch disc with all drawing files. All changes shall be made on the disc and shall be compatible to that of AutoCAD Release 2010. Two (2) sets of black lined prints shall be submitted with all recorded changes, and with the file disc, to the Engineer for approval. Final payment for electrical work is contingent upon receipt of drawings. Cost of record drawings will be borne by this Contractor.

1.16 DEFINITIONS

A. The terms “Electrical Contractor”, “This Contractor", "Electrical Contractor", "Electrical Subcontractor", all refer to the work of this Section 16100.

1.17 PRODUCT DELIVERY, STORAGE, AND HANDLING

A. The General Contractor shall provide and pay for all dumpster services during the entire construction period. Suppliers and Sub-Contractors to bring all rubbish and debris to the dumpster location daily. No costs are to be assessed to the suppliers or Sub-Contractors by the General Contractor for this service.

B. The Electrical Contractor, Sub-Contractors and suppliers, individually, shall furnish their own staging, scaffolding, and hoisting equipment to get workers, material and equipment from the point of delivery at the project site to the point of use or installation within the building and project site. All crane and rigging services required are the responsibility of each individual trade.

1.18 WORK CONDITIONS/SEQUENCE

A. If the Electrical Contractor find that conditions are not appropriate for them to begin the work of their trade, or if they are directed to perform their work out of sequence by the General Contractor, or if the General Contractor directs the Electrical Contractor to start and continue regardless of job conditions, the Electrical Contractor shall notify the Site

Engineer in writing by certified mail immediately.

PART 2 – PRODUCTS
BASIC MATERIALS AND METHODS

2.01 RACEWAYS AND FITTINGS

A. Rigid conduit where used shall be heavy wall hot dipped, galvanized: Midland-Ross, Wheatland or Republic.

B. Size of conduit used shall be as indicated on the contract drawings.

C. Electrical Metallic Tubing (EMT) shall be mild steel, electrically welded, galvanized, Midland-Ross, Wheatland or Republic.

D. Plastic conduit shall be Type PVC40 Carlon Co. as noted on the drawings.

E. Conduit installed underground shall be rigid galvanized or Type PVC40 plastic conduit. Raceways and underground sweeps rising up into the control cabinets shall be rigid galvanized conduit.

F. During construction, ends of conduit shall be kept tightly plugged to exclude plaster, dirt, dust, moisture and debris.

G. Ends of conduit entering boxes shall be equipped with galvanized locknuts or bushings. Cut ends of conduit shall be reamed free of burrs and sharp edges.

H. A 200 pound tensile strength plastic line shall be left in each interior conduit run in which permanent wiring is not installed. Each spare underground conduit or duct between service points shall be provided with a fish wire.

I. Feeder conduits entering panels, junction boxes and similar equipment shall be provided with galvanized malleable iron locknuts and O.Z. or union malleable iron bakelite insulated type bushings or approved PVC adapter. Fittings shall have a ground lug and be grounded at all points in the system.

2.02 WIRE

A. Unless otherwise specified, conductors installed in conduit shall be Type THHN, 600V, 90 degree C. - Anaconda Densheath 900. Conductors shall be copper.

B. Covering of wires and cables designed to meet the above specifications shall have distinctive markings as required by the latest standards of UL, Inc., making them readily identifiable in the field.

2.03 GROUNDING

A. The entire system shall be grounded in accordance with the National Board of Fire

Underwriters', State and local requirements.

B. Framework of the sports lighting poles, panels, control cabinet equipment, etc., shall be grounded to a ground loop or buss to receive a ground conductor.

C. This Contractor shall furnish and install an equipment ground wire in feeder runs to meet requirements of the National Electrical Code.

2.04 OUTLET BOXES

A. Outlet boxes shall be weatherproof, Steel City, Appleton, or Raco, galvanized of a type best adaptable to their respective use and in general four (4) square or octagon. Boxes in plaster areas shall be equipped with plaster rings or trim.

B. Outlet boxes shall be provided with only the holes necessary to accommodate conduit connected. Boxes shall be furnished with lugs, ears, covers and/or outlet devices for attachment.

C. Plastic boxes are NOT acceptable.

2.05 PULL AND JUNCTION BOXES

A. Pull and junction boxes shall conform to requirements of the National Electrical Code. They shall be galvanized code gauge steel construction with removable cover plate secured by 1/4" brass machine screws. Junction boxes shall be supported to the structure.

2.06 COMPOSITE HANDHOLES

A. Composite (polymer concrete) handholes for electrical facilities.

1. Manufactured from heavy-duty, fire-retardant polymer concrete reinforced composites, with UV stabilizers and vertical ribs for structural stiffness.

2. Dimensions shall be as required.

3. Color of electrical hand holes and covers to be green in grass areas and grey in sidewalk areas, as approved by the Engineer. Handholes to be installed flush with finish grade. Handholes to have open bottom. A layer of 6-inches of washed crushed stone (#57) shall be installed under each handhole to assist with drainage, and this compacted gravel base material shall extend out beyond the sidewalls of the handhole. Conduits shall sweep up and be at least 4-inches above handhole bottom and have all penetrations waterproofed.

4. Handholes and Covers shall be designed for street-rated, heavy duty applications, meeting the requirements of either: AASHTO HS-20 or ANSI/SCTE 77-2002 Tier 15 loading, with a minimum design load of 15,000 lbs for both the hand hole box and cover.

5. Quarzite or equal.

6. Provide with bolted, gasketed cover, containing two (2) stainless steel (penta-head) captive bolts and self-centering corrosion resistant nuts. Cover to have two (2) 5/8" x 4" lifting slots.

7. Cover to have skid resistant surface and be permanently engraved with "ELECTRICAL" logo.

8. Handholes shall meet the requirements of the latest edition of the National Electrical Code (latest edition) with regards to structural integrity, installation methods, grounding of the cover and metallic parts, etc. Handholes shall be UL listed for the intended use. Pullboxes shall be in accordance with the City of Waltham Wiring Department and as otherwise designated on the contract drawings.

2.07 SYSTEM OF LIGHT AND POWER

A. The secondary distribution system's is 120/240 volt, 1 phase, 3 wire, 60HZ AC.

2.08 CIRCUIT BREAKERS

A. Circuit breakers for lighting and small power loads shall be bolt-on thermal magnetic, quick-make, quick-break, trip free and sized as designated on panel schedules.

B. Circuit breakers for distribution and power panels shall be bolt-on quick-make, quick-break, trip free, molded case type and sized as shown on panel schedules.

C. Circuit breakers shall be manufactured by Cutler Hammer Co., Siemens Co., Square D, General Electric or equal.

2.09 PANELS

A. Panels shall be circuit breaker type, sized as indicated on drawings.

B. Panels shall be mounted in code gauge steel cabinets having not less than six (6) inch gutters, equipped with hinged doors, flush catch lock and keys, having surface or flush trims as designed on schedules and drawings.

C. Provide engraved bakelite nameplate on trim of panels, indicating number and voltage.

D. Panels shall have equipment ground buss isolated from the system ground buss to receive the fifth wire, which is the equipment ground wire.

E. Panels shall have typewritten legends.

F. Panels shall be Cutler Hammer Co., Siemens Co., General Electric, Square D, or equal.

G. All panels shall have a door on door with locking devices.

2.10 METER SOCKETS

A. Meter Sockets: UL 414, UL 486B, and ANSI C12.7.

B. Outdoor meter sockets are to be NEMA 3R. Unless otherwise noted, meter sockets shall be ringless, with lever bypass, tin plated connections, and have provision for a fifth terminal on single-phase applications. Meter Sockets shall also meet the requirements of the local electric utility.

C. Meter Socket shall be either heavy duty or medium duty, 100 ampere minimum, ringless, 5 terminal, with approximate dimensions of 19”H x 13”W x 5”D. (Milbank U2860-XL-5T9 or approved equal).

2.11 WARNING TAPE

A. Warning tape shall be six (6) inches wide, polyethylene not less than 3.5 mil thick with a minimum strength of 1,500 psi and shall be manufactured by W.H. Brady Co., Panduit Corp., or approved equal. Tape shall be red for electric conduit, and red or yellow for communication conduit. Tape shall have black lettering on two lines as indicated below:

CAUTION CAUTION CAUTION
BURIED ELECTRIC LINE BELOW

2.12 CONTROL CABINET NEMA 4 ENCLOSURE (TWO DOOR TYPE)

A. The exterior grade outdoor enclosure shall be NEMA 4 as manufactured by Wiegmann Enclosures, Inc. #N4D746012-3PT; or Model Number MEAN4-607212 as Manufactured by Mass Electrical Apparatus, 42 Oakville Street, Lynn, MA, or approved equal. The cabinet doors, E body, shall be constructed from #10 & #12 steel which has a minimum thickness of 14 gauge. External welds will be made by using the Heliarc welding method; whereas, internal welds will be continuous. All welds shall be neatly formed and free of cracks, blow holes and other irregularities. All exterior welds will be continuous and ground smooth. The cabinets shall be ANSI 61 Grey baked powder coat finish.

1. Back panels shall be provided.

B. All inside and outside edges of the cabinet shall be free of burrs.

C. The cabinet shall be designed with a crowned to prevent the accumulation of water on its top surface.

D. The door opening shall be double flanged on all (4) sides which increases strength around openings and keeps dirt and liquids from entering the enclosure when door is opened.

E. A door restraint shall be provided to prevent door movement in windy conditions.

F. Reinforced lifting rings will be provided which will safely support an equipment load of at least 600 pounds in addition to the weight of the enclosure.

G. Floor stands shall be provided to raise the enclosure above ground level.

H. The cabinet doors will be a minimum of 80% of the front surface area.

1. The doors shall be furnished with a gasket that satisfies the physical properties as found in UL508 table 21.1 and shall form a weathertight seal between the cabinet and door.

I. The hinges shall be continuous and welded to the cabinet and door.

1. The hinges will be made of stainless steel and shall have a .250 inch diameter stainless steel hinge pin.
2. The hinge pin shall be capped top and bottom by weld to render it tamperproof.

J. The latching mechanism shall be a 3-point draw roller type.

1. The pushrods will be turned edgewise at the outward supports and shall be .250 inch by .750 inch aluminum, minimum.
2. Rollers shall have a minimum diameter of .875 inch and will be made of nylon. The center catch shall be fabricated from .187 inch aluminum, minimum.
3. A removable center post will be provided.

K. An operating handle shall be furnished.

1. The handle will be stainless steel with a ¾ inch diameter shank.
2. The latching handle shall have a provision for padlocking in the closed position.

L. A light/alarm switch bracket shall be provided.

M. Steel 3/8-16 collar studs shall be used to mount equipment panels.

N. Unless otherwise specified, the outside surface of the cabinet shall have a smooth, uniform, Grey polyester powder coat finish inside and out. Print pocket and back panel shall have a smooth, uniform, white polyester powder coat

O. Enclosures intended for pad mounting shall be constructed with integral (welded-on) 12 inch floor stands that have .44 inch diameter mounting holes placed 6.88 inches from the left and right outside cabinet edges and 2.0 inches from front and rear enclosure dimensions.

P. Horizontal distance between bolt hole centers may vary with the enclosure width dimension.

PART 3 - EXECUTION

3.01 INSPECTION AND COORDINATION

A. This Contractor shall inspect surfaces and areas that will receive his material and the job conditions as they exist, and report any conditions that may adversely affect his work. Notify Engineer or Electrical Contractor of unsuitable conditions.

B. Coordinate work with construction schedule and job progress.

C. This Contractor shall confer with the Electrical Contractor and other Trades to coordinate his work and to properly locate systems to avoid conflict and interference.

D. Any interference with the work of other Trades or with Engineering or structural details shall be brought to the attention of the Engineer for decision before installation. Contractor's failure to so coordinate his work will not relieve him of the responsibility to correct work to suit building conditions.

3.02 INSTALLATION

A. Installation shall be by skilled workmen using proper equipment. Commencement of work shall be deemed as acceptance of existing conditions by installer.

B. Entire application shall be in strict accordance with manufacturer's recommendations and the standards of the National Electrical Code, local codes and ordinances, OSHA safety codes and regulations.

C. After wires are pulled in and all fixtures are installed, this Contractor shall make tests for performance, grounds, etc., and shall immediately remedy defects. Equipment for tests shall be borne by this Contractor.

D. Work under this Contract must be so performed that the progress of the entire project, including work of all Trades shall not cause delays or interference. Material and apparatus shall be installed as fast as condition of the building will permit.

3.03 RACEWAYS AND FITTINGS

A. Refer to drawings for conduit sizes.

B. Conduit installed underground or under concrete slabs shall be painted with Rustoleum protective compound before installation, touched up and sealed to exclude water entering conduit after installation.

C. During construction ends of conduit shall be tightly plugged to exclude dirt, dust and moisture.

D. Ends of conduit entering boxes shall be equipped with galvanized locknuts and bushings. Cut ends of conduit shall be reamed free of burrs and sharp edges.

E. Electrical metallic tubing couplings and terminations in outlet boxes, junction boxes, panelboard cabinets, etc., shall be secured thereto for grounding by means of raintight and concrete-tight fittings of the interlocking compression ring or stainless steel, multiple joint locking type. Set screws or indentations will not be acceptable as a method of attachment of fittings to conduit or EMT.

3.03 WIRING

A. Joints in wiring shall be made with approved type solderless connectors.

3.04 WIRE

A. Wire #8 and larger shall be stranded and no wire less than #12 shall be used, unless otherwise noted.

3.05 GROUNDING SYSTEM

A. Framework of the panels shall be grounded by a ground loop or buss to receive a building ground connection.

B. No ground wire shall be spliced, except as approved; where necessary to tap or splice a ground wire cable or loop, Cadweld copper weld splice or tap shall be used. Cable ground connection shall be solderless, non-corrosive, cast lug type. Ground clamps shall be non-corrosive cast brass or bronze.

C. Exposed non current carrying conductive material enclosing electrical equipment or forming a part of such equipment shall be bonded together in a positive continuous raceway and equipment ground. A bonding jumper shall be provided where continuity of ground may be doubtful because of oversize locknuts or loose jointed connections or in any instance where in the opinion of the Engineer the continuity of ground is doubtful.

D. Seal-tite for power connections shall be equipped with ground connections and internal ground wire.

E. This Contractor shall install a fifth wire to be the ground conductor in feeder runs to meet requirements of the National Electrical Code.

F. Ground fault protection shall be installed for temporary and permanent power to meet OSHA requirements and those of the National Electrical Code.

3.06 UNDERGROUND RACEWAYS

A. Underground raceways shall be supported with plastic spacers every five (5') feet.

3.07 INSPECTIONS

A. The Contractor shall contact the City to arrange for inspections prior to filling any electrical trenches.

3.08 INSTRUCTIONS TO OWNER

A. It shall be the responsibility of the Electrical Foreman to instruct the Owner in the function, operation and maintenance of electrical systems and equipment.

3.09 CLEANUP

A. Panels and like shall be cleaned and left in a neat manner and where required shall be painted if any finish material has been damaged.

SECTION 16526

EXTERIOR ATHLETIC LIGHTING

LIGHTING SYSTEM WITH LED LIGHT SOURCE

PART 1 – GENERAL

1.01 SUMMARY

A. Work covered by this section of the specifications shall conform to the contract documents, engineering plans as well as state and local codes.

B. The purpose of these specifications is to define the lighting system performance and design standards for Elsie Turner Field using an LED Lighting source. The manufacturer / contractor shall supply lighting equipment to meet or exceed the standards set forth in these specifications.

C. The sports lighting will be for the following venues:

1. Softball

D. The primary goals of this sports lighting project are:

1. Guaranteed Light Levels: Selection of appropriate light levels impact the safety of the players and the enjoyment of spectators. Therefore light levels are guaranteed to not drop below specified target values for a period of 25 years.

2. Environmental Light Control: It is the primary goal of this project to minimize spill light to adjoining properties and glare to the players, spectators and neighbors. The LED design should provide better control than a good HID design.

3. Life-cycle Cost: In order to reduce the operating budget, the preferred lighting system shall be energy efficient and cost effective to operate. All maintenance costs shall be eliminated for the duration of the warranty.

4. Control and Monitoring: To allow for optimized use of labor resources and avoid unneeded operation of the facility, customer requires a remote on/off control system for the lighting system. Fields should be proactively monitored to detect luminaire outages over a 25-year life cycle. All communication and monitoring costs for 25-year period shall be included in the bid.

1.02 LIGHTING PERFORMANCE

A. Illumination Levels and Design Factors: Playing surfaces shall be lit to an average target illumination level and uniformity as specified in the chart below. Lighting calculations shall be developed and field measurements taken on the grid spacing with the minimum number of grid points specified below. Appropriate light loss factors shall be applied and submitted for the basis of design. Average illumination level shall be measured in accordance with the IESNA LM-5-04 (IESNA Guide for Photometric Measurements of Area and Sports Lighting Installations). Illumination levels shall not to drop below desired target values in accordance to IES RP-6-15, Page 2, Maintained Average

Illuminance and shall be guaranteed for the full warranty period.

Area of Lighting	Average Target Illumination Levels	Maximum to Minimum Uniformity Ratio	Grid Points	Grid Spacing
Softball Infield	50 Footcandles	2.0:1.0	25	20’ X 20’
Softball Outfield	30 Footcandles	2.5:10	73	20’ X 20’

B. Hours of usage: Designs shall be based on the following hours of usage

Area of Lighting	Annual Usage Hours	25 year Usage Hours
Softball	300	3000

C. Color: The lighting system shall have a minimum color temperature of 5700K and a CRI of 75.

D. Mounting Heights: To ensure proper aiming angles for reduced glare and to provide better playability, minimum mounting heights shall be as described below. Higher mounting heights may be required based on photometric report and ability to ensure the top of the field angle is a minimum of 10 degrees below horizontal.

# of Poles	Pole Designation	Pole Height
2	A1 – A2	60’
2	B1 – B2	70’

1.03 ENVIRONMENTAL LIGHT CONTROL

A. Light Control Luminaires: All luminaires shall utilize spill light and glare control devices including, but not limited to, internal shields, louvers and external shields. No symmetrical beam patterns are accepted.

B. Spill Light and Glare Control: To minimize impact on adjacent properties, spill light and candela values must not exceed the following.

	Average	Maximum
Property Line Maximum Vertical Footcandles	.02 fc	.14 fc
Property Line Horizontal Footcandles	.00 fc	.03 fc
Property Line Max Candela	1960.55 Cd	8851.67 Cd

C. Spill Scans: Spill scans must be submitted indicating the amount of horizontal and vertical footcandles along the specified lines. Light levels shall be taken at 30-foot intervals along the boundary line. Readings shall be taken with the meter orientation at both horizontal and aimed towards the most intense bank of lights. Illumination level shall be measured in accordance with the IESNA LM-5-04 after 1 hour warm up.

D. The first page of a photometric report for all luminaire types proposed showing horizontal and vertical axial candle power shall be provided to demonstrate the capability of achieving the specified performance. Reports shall be certified by a qualified independent testing laboratory with a minimum of five years experience or by a manufacturer's laboratory with a current accreditation under the National Voluntary Laboratory Accreditation Program for Energy Efficient Lighting Products. A summary of the horizontal and vertical aiming angles for each luminaire shall be included with the photometric report.

1.04 LIFE-CYCLE COSTS

A. Manufacturer shall submit a 25-year life cycle cost calculation as outlined in the required submittal information.

B. Preventative and Spot Maintenance: Manufacturer shall provide all preventative and spot maintenance, including parts and labor for 25 years from the date of equipment shipment. Individual outages shall be repaired when the usage of any field is materially impacted. Owner agrees to check fuses in the event of a luminaire outage.

PART 2 – PRODUCTS

2.01 SPORTS LIGHTING SYSTEM CONSTRUCTION

A. Manufacturing Requirements: All components shall be designed and manufactured as a system. All luminaires, wire harnesses, drivers and other enclosures shall be factory assembled, aimed, wired and tested.

B. Durability: All exposed components shall be constructed of corrosion resistant material and/or coated to help prevent corrosion. All exposed carbon steel shall be hot dip galvanized per ASTM A123. All exposed aluminum shall be powder coated with high performance polyester or anodized. All exterior reflective inserts shall be anodized, coated, and protected from direct environmental exposure to prevent reflective degradation or corrosion. All exposed hardware and fasteners shall be stainless steel of 18-8 grade or better, passivated and coated with aluminum-based thermosetting epoxy resin for protection against corrosion and stress corrosion cracking. Structural fasteners may be carbon steel and galvanized meeting ASTM A153 and ISO/EN 1461 (for hot dipped galvanizing), or ASTM B695 (for mechanical galvanizing). All wiring shall be enclosed within the cross-arms, pole, or electrical components enclosure.

C. System Description: Lighting system shall consist of the following:

1. Galvanized steel poles and cross-arm assembly.

2. Non-approved pole technology:

a. Square static cast concrete poles will not be accepted.

b. Direct bury steel poles which utilize the extended portion of the steel shaft for their foundation will not be accepted due to potential for internal and external corrosive reaction to the soils and long term

performance concerns.

3. Lighting systems shall use concrete foundations. See Section 2.3 for details.

   a. For a foundation using a pre-stressed concrete base embedded in concrete backfill the concrete shall be air-entrained and have a minimum compressive design strength at 28 days of 3,000 PSI. 3,000 PSI concrete specified for early pole erection, actual required minimum allowable concrete strength is 1,000 PSI. All piers and concrete backfill must bear on and against firm undisturbed soil.

   b. For anchor bolt foundations or foundations using a pre-stressed concrete base in a suspended pier or re-inforced pier design pole erection may occur after 7 days. Or after a concrete sample from the same batch achieves a certain strength.

4. Manufacturer will supply all drivers and supporting electrical equipment

   a. Remote drivers and supporting electrical equipment shall be mounted approximately 10 feet above grade in aluminum enclosures. The enclosures shall be touch-safe and include drivers and fusing with indicator lights on fuses to notify when a fuse is to be replaced for each luminaire. Disconnect per circuit for each pole structure will be located in the enclosure.

   b. Alternate: Integral drivers mounted at the top of the pole will require a pole mounted enclosure approximately 10 feet above grade. The enclosure shall include a disconnect per circuit and surge protection.

5. Manufacturer shall provide surge protection at the pole equal to or greater than 40 kA for each line to ground (Common Mode) as recommended by IEEE C62.41.2_2002.

6. Wire harness complete with an abrasion protection sleeve, strain relief and plug-in connections for fast, trouble-free installation.

7. All luminaires, visors, and cross-arm assemblies shall withstand 150 mph winds and maintain luminaire aiming alignment.

8. Control cabinet to provide remote on-off control and monitoring of the lighting system. See Section 2.4 for further details.

9. Manufacturer shall provide lightning grounding as defined by NFPA 780 and be UL Listed per UL 96 and UL 96A.

   a. Integrated grounding via concrete encased electrode grounding system.

b. If grounding is not integrated into the structure, the manufacturer shall supply grounding electrodes, copper down conductors, and exothermic weld kits. Electrodes and conductors shall be sized as required by NFPA 780.The grounding electrode shall be minimum size of 5/8 inch diameter and 8 feet long, with a minimum of 10 feet embedment. Grounding electrode shall be connected to the structure by a grounding electrode conductor with a minimum size of 2 AWG for poles with 75 feet mounting height or less, and 2/0 AWG for poles with more than 75 feet mounting height.

D. Safety: All system components shall be UL listed for the appropriate application.

2.02 ELECTRICAL

A. Electric Power Requirements for the Sports Lighting Equipment:

1. Electric power: 240 Volt, 1 Phase

2. Maximum total voltage drop: Voltage drop to the disconnect switch located on the poles shall not exceed three (3) percent of the rated voltage.

B. Energy Consumption: The kW consumption for the field lighting system shall be 19.84 kW.

2.03 STRUCTURAL PARAMETERS

A. Wind Loads: Wind loads shall be based on the 2009 International Building Code. Wind loads to be calculated using ASCE 7-05, a design wind speed of 105, exposure category C and wind importance factor of II.

B. Pole Structural Design: The stress analysis and safety factor of the poles shall conform to 2009 AASHTO Standard Specification for Structural Supports for Highway Signs, Luminaires, and Traffic Signals (LTS-5).

C. Foundation Design: The foundation design shall be based on soils that meet or exceed those of a Class 5 material as defined by 2009 IBC Table 1806.2.

D. Foundation Drawings: Project specific foundation drawings stamped by a registered engineer in the state where the project is located are required. The foundation drawings must list the moment, shear (horizontal) force, and axial (vertical) force at ground level for each pole. These drawings must be submitted at time of bid to allow for accurate pricing.

2.04 CONTROL

A. Instant On/Off Capabilities: System shall provide for instant on/off of luminaires.

B. Lighting contactor cabinet(s) constructed of NEMA Type 4 aluminum, designed for easy installation with contactors, labeled to match field diagrams and electrical design. Manual off-on-auto selector switches shall be provided.

C. Remote Monitoring System: System shall monitor lighting performance and notify

manufacturer if individual luminaire outage is detected so that appropriate maintenance can be scheduled. The controller shall determine switch position (manual or auto) and contactor status (open or closed).

D. Management Tools: Manufacturer shall provide a web-based database and dashboard tool of actual field usage and provide reports by facility and user group. Dashboard shall also show current status of luminaire outages, control operation and service. Mobile application will be provided suitable for IOS, Android and Blackberry devices.

E. Hours of Usage: Manufacturer shall provide a means of tracking actual hours of usage for the field lighting system that is readily accessible to the owner.

1. Cumulative hours: shall be tracked to show the total hours used by the facility
2. Report hours saved by using early off and push buttons by users.

F. Communication Costs: Manufacturer shall include communication costs for operating the controls and monitoring system for a period of 25 years.

PART 3 – EXECUTION

3.01 SOIL QUALITY CONTROL

A. It shall be the Contractor's responsibility to notify the Owner if soil conditions exist other than those on which the foundation design is based, or if the soil cannot be readily excavated. Contractor may issue a change order request / estimate for the Owner's approval / payment for additional costs associated with:

1. Providing engineered foundation embedment design by a registered engineer in the State of MA for soils other than specified soil conditions;

2. Additional materials required to achieve alternate foundation;

3. Excavation and removal of materials other than normal soils, such as rock, caliche, etc.

3.02 DELIVERY TIMING

A. Delivery Timing Equipment On-Site: The equipment must be on-site 6 – 8 weeks from receipt of approved submittals and receipt of complete order information.

3.03 FIELD QUALITY CONTROL

A. Illumination Measurements: Upon substantial completion of the project and in the presence of the Contractor, Project Engineer, Owner's Representative, and Manufacturer's Representative, illumination measurements shall be taken and verified. The illumination measurements shall be conducted in accordance with IESNA LM-5-04.

B. Field Light Level Accountability:

1. Light levels are guaranteed not to fall below the target maintained light levels for the entire warranty period of 25 Years.

2. The contractor/manufacturer shall be responsible for an additional inspection one year from the date of commissioning of the lighting system and will utilize the owner's light meter in the presence of the owner.

3. The contractor/manufacturer will be held responsible for any and all changes needed to bring these fields back to compliance for light levels and uniformities. Contractor/Manufacturer will be held responsible for any damage to the fields during these repairs.

C. Correcting Non-Conformance: If, in the opinion of the Owner or his appointed Representative, the actual performance levels including footcandles and uniformity ratios are not in conformance with the requirements of the performance specifications and submitted information, the Manufacturer shall be required to make adjustments to meet specifications and satisfy Owner.

3.04 WARRANTY AND GUARANTEE

A. 25-Year Warranty: Each manufacturer shall supply a signed warranty covering the entire system for 25 years from the date of shipment. Warranty shall guarantee specified light levels. Manufacturer shall maintain specifically-funded financial reserves to assure fulfillment of the warranty for the full term. Warranty does not cover weather conditions events such as lightning or hail damage, improper installation, vandalism or abuse, unauthorized repairs or alterations, or product made by other manufacturers.

B. Maintenance: Manufacturer shall monitor the performance of the lighting system, including on/off status, hours of usage and luminaire outage for 25 years from the date of equipment shipment. Parts and labor shall be covered such that individual luminaire outages will be repaired when the usage of any field is materially impacted. Owner agrees to check fuses in the event of a luminaire outage.

3.05 INSPECTIONS

A. The Contractor shall contact the City to arrange for inspection prior to filling any electrical trenches

Appendix A

Massachusetts Department of Environmental Protection
Bureau of Resource Protection - Wetlands

WPA Form 5 – Order of Conditions

Massachusetts Wetlands Protection Act M.G.L. c. 131, §40

Provided by MassDEP:
316-0717
MassDEP File #

eDEP Transaction #

Waltham
City/Town

A. General Information

Please note: this form has been modified with added space to accommodate the Registry of Deeds Requirements

Important: When filling out forms on the computer, use only the tab key to move your cursor - do not use the return key.

1. From: Waltham
Conservation Commission

2. This issuance is for (check one): a. ☒ Order of Conditions b. ☐ Amended Order of Conditions

3. To: Applicant:

Sandra
a. First Name

Tomasello
b. Last Name

City of Waltham Recreation Dept.
c. Organization

510 Moody Street
d. Mailing Address

Waltham
e. City/Town

MA
f. State

02453
g. Zip Code

4. Property Owner (if different from applicant):

a. First Name

b. Last Name

c. Organization

d. Mailing Address

e. City/Town

f. State

g. Zip Code

5. Project Location:

16 Pine Vale Road
a. Street Address

Waltham
b. City/Town

R013
c. Assessors Map/Plat Number

011/0001, 001A, 001B
d. Parcel/Lot Number

Latitude and Longitude, if known: 42d412218m s
d. Latitude

71d243802m s
e. Longitude

Massachusetts Department of Environmental Protection
Bureau of Resource Protection - Wetlands
WPA Form 5 – Order of Conditions
Massachusetts Wetlands Protection Act M.G.L. c. 131, §40

Provided by MassDEP:
316-0717
MassDEP File #

eDEP Transaction #

Waltham
City/Town

A. General Information (cont.)

6. Property recorded at the Registry of Deeds for (attach additional information if more than one parcel):

a. County | b. Certificate Number (if registered land)

c. Book | d. Page

7. Dates: a. Date Notice of Intent Filed | b. Date Public Hearing Closed | c. Date of Issuance

8. Final Approved Plans and Other Documents (attach additional plan or document references as needed):

a. Plan Title

b. Prepared By | c. Signed and Stamped by

d. Final Revision Date | e. Scale

f. Additional Plan or Document Title | g. Date

B. Findings

1. Findings pursuant to the Massachusetts Wetlands Protection Act:

Following the review of the above-referenced Notice of Intent and based on the information provided in this application and presented at the public hearing, this Commission finds that the areas in which work is proposed is significant to the following interests of the Wetlands Protection Act (the Act). Check all that apply:

a. ☐ Public Water Supply
b. ☐ Land Containing Shellfish
c. ☐ Prevention of Pollution
d. ☐ Private Water Supply
e. ☐ Fisheries
f. ☐ Protection of Wildlife Habitat
g. ☐ Groundwater Supply
h. ☐ Storm Damage Prevention
i. ☐ Flood Control

2. This Commission hereby finds the project, as proposed, is: (check one of the following boxes)

Approved subject to:

a. ☐ the following conditions which are necessary in accordance with the performance standards set forth in the wetlands regulations. This Commission orders that all work shall be performed in accordance with the Notice of Intent referenced above, the following General Conditions, and any other special conditions attached to this Order. To the extent that the following conditions modify or differ from the plans, specifications, or other proposals submitted with the Notice of Intent, these conditions shall control.

Massachusetts Department of Environmental Protection
Bureau of Resource Protection - Wetlands
WPA Form 5 – Order of Conditions
Massachusetts Wetlands Protection Act M.G.L. c. 131, §40

Provided by MassDEP:
316-0717
MassDEP File #

eDEP Transaction #

Waltham
City/Town

B. Findings (cont.)

Denied because:

b. ☐ the proposed work cannot be conditioned to meet the performance standards set forth in the wetland regulations. Therefore, work on this project may not go forward unless and until a new Notice of Intent is submitted which provides measures which are adequate to protect the interests of the Act, and a final Order of Conditions is issued. **A description of the performance standards which the proposed work cannot meet is attached to this Order.**

c. ☐ the information submitted by the applicant is not sufficient to describe the site, the work, or the effect of the work on the interests identified in the Wetlands Protection Act. Therefore, work on this project may not go forward unless and until a revised Notice of Intent is submitted which provides sufficient information and includes measures which are adequate to protect the Act's interests, and a final Order of Conditions is issued. **A description of the specific information which is lacking and why it is necessary is attached to this Order as per 310 CMR 10.05(6)(c).**

3. ☒ Buffer Zone Impacts: Shortest distance between limit of project disturbance and the wetland resource area specified in 310 CMR 10.02(1)(a) _____ a. linear feet

Inland Resource Area Impacts: Check all that apply below. (For Approvals Only)

Resource Area	Proposed Alteration	Permitted Alteration	Proposed Replacement	Permitted Replacement
4. ☐ Bank	a. linear feet	b. linear feet	c. linear feet	d. linear feet
5. ☐ Bordering Vegetated Wetland	a. square feet	b. square feet	c. square feet	d. square feet
6. ☐ Land Under Waterbodies and Waterways	a. square feet	b. square feet	c. square feet	d. square feet
	e. c/y dredged	f. c/y dredged		
7. ☐ Bordering Land Subject to Flooding	a. square feet	b. square feet	c. square feet	d. square feet
Cubic Feet Flood Storage	e. cubic feet	f. cubic feet	g. cubic feet	h. cubic feet
8. ☐ Isolated Land Subject to Flooding	a. square feet	b. square feet		
Cubic Feet Flood Storage	c. cubic feet	d. cubic feet	e. cubic feet	f. cubic feet
9. ☐ Riverfront Area	a. total sq. feet	b. total sq. feet		
Sq ft within 100 ft	c. square feet	d. square feet	e. square feet	f. square feet
Sq ft between 100-200 ft	g. square feet	h. square feet	i. square feet	j. square feet

Massachusetts Department of Environmental Protection
Bureau of Resource Protection - Wetlands
WPA Form 5 – Order of Conditions
Massachusetts Wetlands Protection Act M.G.L. c. 131, §40

Provided by MassDEP:
316-0717
MassDEP File #

eDEP Transaction #

Waltham
City/Town

B. Findings (cont.)

Coastal Resource Area Impacts: Check all that apply below. (For Approvals Only)

	Proposed Alteration	Permitted Alteration	Proposed Replacement	Permitted Replacement
10. ☐ Designated Port Areas	Indicate size under Land Under the Ocean, below			
11. ☐ Land Under the Ocean	a. square feet	b. square feet		
	c. c/y dredged	d. c/y dredged		
12. ☐ Barrier Beaches	Indicate size under Coastal Beaches and/or Coastal Dunes below			
13. ☐ Coastal Beaches	a. square feet	b. square feet	c. nourishment cu yd	d. nourishment cu yd
14. ☐ Coastal Dunes	a. square feet	b. square feet	c. nourishment cu yd	d. nourishment cu yd
15. ☐ Coastal Banks	a. linear feet	b. linear feet		
16. ☐ Rocky Intertidal Shores	a. square feet	b. square feet		
17. ☐ Salt Marshes	a. square feet	b. square feet	c. square feet	d. square feet
18. ☐ Land Under Salt Ponds	a. square feet	b. square feet		
	c. c/y dredged	d. c/y dredged		
19. ☐ Land Containing Shellfish	a. square feet	b. square feet	c. square feet	d. square feet
20. ☐ Fish Runs	Indicate size under Coastal Banks, Inland Bank, Land Under the Ocean, and/or inland Land Under Waterbodies and Waterways, above			
	a. c/y dredged	b. c/y dredged		
21. ☐ Land Subject to Coastal Storm Flowage	a. square feet	b. square feet		
22. ☐ Riverfront Area	a. total sq. feet	b. total sq. feet		
Sq ft within 100 ft	c. square feet	d. square feet	e. square feet	f. square feet
Sq ft between 100-200 ft	g. square feet	h. square feet	i. square feet	j. square feet

Massachusetts Department of Environmental Protection
Bureau of Resource Protection - Wetlands
WPA Form 5 – Order of Conditions
Massachusetts Wetlands Protection Act M.G.L. c. 131, §40

Provided by MassDEP:
316-0717
MassDEP File #

eDEP Transaction #

Waltham
City/Town

B. Findings (cont.)

* #23. If the project is for the purpose of restoring or enhancing a wetland resource area in addition to the square footage that has been entered in Section B.5.c (BVW) or B.17.c (Salt Marsh) above, please enter the additional amount here.

23. ☐ Restoration/Enhancement *:

a. square feet of BVW | b. square feet of salt marsh

24. ☐ Stream Crossing(s):

a. number of new stream crossings | b. number of replacement stream crossings

C. General Conditions Under Massachusetts Wetlands Protection Act

The following conditions are only applicable to Approved projects.

1. Failure to comply with all conditions stated herein, and with all related statutes and other regulatory measures, shall be deemed cause to revoke or modify this Order.
2. The Order does not grant any property rights or any exclusive privileges; it does not authorize any injury to private property or invasion of private rights.
3. This Order does not relieve the permittee or any other person of the necessity of complying with all other applicable federal, state, or local statutes, ordinances, bylaws, or regulations.
4. The work authorized hereunder shall be completed within three years from the date of this Order unless either of the following apply:
   a. The work is a maintenance dredging project as provided for in the Act; or
   b. The time for completion has been extended to a specified date more than three years, but less than five years, from the date of issuance. If this Order is intended to be valid for more than three years, the extension date and the special circumstances warranting the extended time period are set forth as a special condition in this Order.
   c. If the work is for a Test Project, this Order of Conditions shall be valid for no more than one year.
5. This Order may be extended by the issuing authority for one or more periods of up to three years each upon application to the issuing authority at least 30 days prior to the expiration date of the Order. An Order of Conditions for a Test Project may be extended for one additional year only upon written application by the applicant, subject to the provisions of 310 CMR 10.05(11)(f).
6. If this Order constitutes an Amended Order of Conditions, this Amended Order of Conditions does not extend the issuance date of the original Final Order of Conditions and the Order will expire on _____ unless extended in writing by the Department.
7. Any fill used in connection with this project shall be clean fill. Any fill shall contain no trash, refuse, rubbish, or debris, including but not limited to lumber, bricks, plaster, wire, lath, paper, cardboard, pipe, tires, ashes, refrigerators, motor vehicles, or parts of any of the foregoing.

Massachusetts Department of Environmental Protection
Bureau of Resource Protection - Wetlands
WPA Form 5 – Order of Conditions
Massachusetts Wetlands Protection Act M.G.L. c. 131, §40

Provided by MassDEP:
316-0717
MassDEP File #

eDEP Transaction #

Waltham
City/Town

C. General Conditions Under Massachusetts Wetlands Protection Act

8. This Order is not final until all administrative appeal periods from this Order have elapsed, or if such an appeal has been taken, until all proceedings before the Department have been completed.

9. No work shall be undertaken until the Order has become final and then has been recorded in the Registry of Deeds or the Land Court for the district in which the land is located, within the chain of title of the affected property. In the case of recorded land, the Final Order shall also be noted in the Registry's Grantor Index under the name of the owner of the land upon which the proposed work is to be done. In the case of the registered land, the Final Order shall also be noted on the Land Court Certificate of Title of the owner of the land upon which the proposed work is done. The recording information shall be submitted to the Conservation Commission on the form at the end of this Order, which form must be stamped by the Registry of Deeds, prior to the commencement of work.

10. A sign shall be displayed at the site not less then two square feet or more than three square feet in size bearing the words,

    "Massachusetts Department of Environmental Protection" [or, "MassDEP"]

    "File Number 316-0717 "

11. Where the Department of Environmental Protection is requested to issue a Superseding Order, the Conservation Commission shall be a party to all agency proceedings and hearings before MassDEP.

12. Upon completion of the work described herein, the applicant shall submit a Request for Certificate of Compliance (WPA Form 8A) to the Conservation Commission.

13. The work shall conform to the plans and special conditions referenced in this order.

14. Any change to the plans identified in Condition #13 above shall require the applicant to inquire of the Conservation Commission in writing whether the change is significant enough to require the filing of a new Notice of Intent.

15. The Agent or members of the Conservation Commission and the Department of Environmental Protection shall have the right to enter and inspect the area subject to this Order at reasonable hours to evaluate compliance with the conditions stated in this Order, and may require the submittal of any data deemed necessary by the Conservation Commission or Department for that evaluation.

16. This Order of Conditions shall apply to any successor in interest or successor in control of the property subject to this Order and to any contractor or other person performing work conditioned by this Order.

Massachusetts Department of Environmental Protection
Bureau of Resource Protection - Wetlands
WPA Form 5 – Order of Conditions
Massachusetts Wetlands Protection Act M.G.L. c. 131, §40

Provided by MassDEP:
316-0717
MassDEP File #

eDEP Transaction #

Waltham
City/Town

C. General Conditions Under Massachusetts Wetlands Protection Act (cont.)

17. Prior to the start of work, and if the project involves work adjacent to a Bordering Vegetated Wetland, the boundary of the wetland in the vicinity of the proposed work area shall be marked by wooden stakes or flagging. Once in place, the wetland boundary markers shall be maintained until a Certificate of Compliance has been issued by the Conservation Commission.

18. All sedimentation barriers shall be maintained in good repair until all disturbed areas have been fully stabilized with vegetation or other means. At no time shall sediments be deposited in a wetland or water body. During construction, the applicant or his/her designee shall inspect the erosion controls on a daily basis and shall remove accumulated sediments as needed. The applicant shall immediately control any erosion problems that occur at the site and shall also immediately notify the Conservation Commission, which reserves the right to require additional erosion and/or damage prevention controls it may deem necessary. Sedimentation barriers shall serve as the limit of work unless another limit of work line has been approved by this Order.

19. The work associated with this Order (the "Project")
    (1) ☒ is subject to the Massachusetts Stormwater Standards
    (2) ☐ is NOT subject to the Massachusetts Stormwater Standards

    If the work is subject to the Stormwater Standards, then the project is subject to the following conditions:

    a) All work, including site preparation, land disturbance, construction and redevelopment, shall be implemented in accordance with the construction period pollution prevention and erosion and sedimentation control plan and, if applicable, the Stormwater Pollution Prevention Plan required by the National Pollution Discharge Elimination System Construction General Permit as required by Stormwater Condition 8. Construction period erosion, sedimentation and pollution control measures and best management practices (BMPs) shall remain in place until the site is fully stabilized.

    b) No stormwater runoff may be discharged to the post-construction stormwater BMPs unless and until a Registered Professional Engineer provides a Certification that:
    i. all construction period BMPs have been removed or will be removed by a date certain specified in the Certification. For any construction period BMPs intended to be converted to post construction operation for stormwater attenuation, recharge, and/or treatment, the conversion is allowed by the MassDEP Stormwater Handbook BMP specifications and that the BMP has been properly cleaned or prepared for post construction operation, including removal of all construction period sediment trapped in inlet and outlet control structures;
    ii. as-built final construction BMP plans are included, signed and stamped by a Registered Professional Engineer, certifying the site is fully stabilized;
    iii. any illicit discharges to the stormwater management system have been removed, as per the requirements of Stormwater Standard 10;

Massachusetts Department of Environmental Protection
Bureau of Resource Protection - Wetlands
WPA Form 5 – Order of Conditions
Massachusetts Wetlands Protection Act M.G.L. c. 131, §40

Provided by MassDEP:
316-0717
MassDEP File #

eDEP Transaction #

Waltham
City/Town

C. General Conditions Under Massachusetts Wetlands Protection Act (cont.)

iv. all post-construction stormwater BMPs are installed in accordance with the plans (including all planting plans) approved by the issuing authority, and have been inspected to ensure that they are not damaged and that they are in proper working condition;

v. any vegetation associated with post-construction BMPs is suitably established to withstand erosion.

c) The landowner is responsible for BMP maintenance until the issuing authority is notified that another party has legally assumed responsibility for BMP maintenance. Prior to requesting a Certificate of Compliance, or Partial Certificate of Compliance, the responsible party (defined in General Condition 18(e)) shall execute and submit to the issuing authority an Operation and Maintenance Compliance Statement ("O&M Statement) for the Stormwater BMPs identifying the party responsible for implementing the stormwater BMP Operation and Maintenance Plan ("O&M Plan") and certifying the following:

i.) the O&M Plan is complete and will be implemented upon receipt of the Certificate of Compliance, and

ii.) the future responsible parties shall be notified in writing of their ongoing legal responsibility to operate and maintain the stormwater management BMPs and implement the Stormwater Pollution Prevention Plan.

d) Post-construction pollution prevention and source control shall be implemented in accordance with the long-term pollution prevention plan section of the approved Stormwater Report and, if applicable, the Stormwater Pollution Prevention Plan required by the National Pollution Discharge Elimination System Multi-Sector General Permit.

e) Unless and until another party accepts responsibility, the landowner, or owner of any drainage easement, assumes responsibility for maintaining each BMP. To overcome this presumption, the landowner of the property must submit to the issuing authority a legally binding agreement of record, acceptable to the issuing authority, evidencing that another entity has accepted responsibility for maintaining the BMP, and that the proposed responsible party shall be treated as a permittee for purposes of implementing the requirements of Conditions 18(f) through 18(k) with respect to that BMP. Any failure of the proposed responsible party to implement the requirements of Conditions 18(f) through 18(k) with respect to that BMP shall be a violation of the Order of Conditions or Certificate of Compliance. In the case of stormwater BMPs that are serving more than one lot, the legally binding agreement shall also identify the lots that will be serviced by the stormwater BMPs. A plan and easement deed that grants the responsible party access to perform the required operation and maintenance must be submitted along with the legally binding agreement.

f) The responsible party shall operate and maintain all stormwater BMPs in accordance with the design plans, the O&M Plan, and the requirements of the Massachusetts Stormwater Handbook.

Massachusetts Department of Environmental Protection
Bureau of Resource Protection - Wetlands
WPA Form 5 – Order of Conditions
Massachusetts Wetlands Protection Act M.G.L. c. 131, §40

Provided by MassDEP:
316-0717
MassDEP File #

eDEP Transaction #

Waltham
City/Town

C. General Conditions Under Massachusetts Wetlands Protection Act (cont.)

g) The responsible party shall:
1. Maintain an operation and maintenance log for the last three (3) consecutive calendar years of inspections, repairs, maintenance and/or replacement of the stormwater management system or any part thereof, and disposal (for disposal the log shall indicate the type of material and the disposal location);
2. Make the maintenance log available to MassDEP and the Conservation Commission ("Commission") upon request; and
3. Allow members and agents of the MassDEP and the Commission to enter and inspect the site to evaluate and ensure that the responsible party is in compliance with the requirements for each BMP established in the O&M Plan approved by the issuing authority.

h) All sediment or other contaminants removed from stormwater BMPs shall be disposed of in accordance with all applicable federal, state, and local laws and regulations.
i) Illicit discharges to the stormwater management system as defined in 310 CMR 10.04 are prohibited.
j) The stormwater management system approved in the Order of Conditions shall not be changed without the prior written approval of the issuing authority.
k) Areas designated as qualifying pervious areas for the purpose of the Low Impact Site Design Credit (as defined in the MassDEP Stormwater Handbook, Volume 3, Chapter 1, Low Impact Development Site Design Credits) shall not be altered without the prior written approval of the issuing authority.

l) Access for maintenance, repair, and/or replacement of BMPs shall not be withheld. Any fencing constructed around stormwater BMPs shall include access gates and shall be at least six inches above grade to allow for wildlife passage.

Special Conditions (if you need more space for additional conditions, please attach a text document):
See attached.

20. For Test Projects subject to 310 CMR 10.05(11), the applicant shall also implement the monitoring plan and the restoration plan submitted with the Notice of Intent. If the conservation commission or Department determines that the Test Project threatens the public health, safety or the environment, the applicant shall implement the removal plan submitted with the Notice of Intent or modify the project as directed by the conservation commission or the Department.

Massachusetts Department of Environmental Protection
Bureau of Resource Protection - Wetlands
WPA Form 5 – Order of Conditions
Massachusetts Wetlands Protection Act M.G.L. c. 131, §40

Provided by MassDEP:
316-0717
MassDEP File #

eDEP Transaction #

Waltham
City/Town

D. Findings Under Municipal Wetlands Bylaw or Ordinance

1. Is a municipal wetlands bylaw or ordinance applicable? ☐ Yes ☒ No
2. The _____ hereby finds (check one that applies):
   Conservation Commission
   a. ☐ that the proposed work cannot be conditioned to meet the standards set forth in a municipal ordinance or bylaw, specifically:

      _____ _____
      1. Municipal Ordinance or Bylaw 2. Citation

      Therefore, work on this project may not go forward unless and until a revised Notice of Intent is submitted which provides measures which are adequate to meet these standards, and a final Order of Conditions is issued.

   b. ☐ that the following additional conditions are necessary to comply with a municipal ordinance or bylaw:

      _____ _____
      1. Municipal Ordinance or Bylaw 2. Citation
3. The Commission orders that all work shall be performed in accordance with the following conditions and with the Notice of Intent referenced above. To the extent that the following conditions modify or differ from the plans, specifications, or other proposals submitted with the Notice of Intent, the conditions shall control.
   The special conditions relating to municipal ordinance or bylaw are as follows (if you need more space for additional conditions, attach a text document):

   _____

   _____

   _____

   _____

Massachusetts Department of Environmental Protection
Bureau of Resource Protection - Wetlands
WPA Form 5 – Order of Conditions
Massachusetts Wetlands Protection Act M.G.L. c. 131, §40

Provided by MassDEP:
316-0717
MassDEP File #

eDEP Transaction #

Waltham
City/Town

E. Signatures

This Order is valid for three years, unless otherwise specified as a special condition pursuant to General Conditions #4, from the date of issuance.

8-18-2016
1. Date of Issuance

Please indicate the number of members who will sign this form.
This Order must be signed by a majority of the Conservation Commission.

6
2. Number of Signers

The Order must be mailed by certified mail (return receipt requested) or hand delivered to the applicant. A copy also must be mailed or hand delivered at the same time to the appropriate Department of Environmental Protection Regional Office, if not filing electronically, and the property owner, if different from applicant.

Signatures:

☐ by hand delivery on

Date

☒ by certified mail, return receipt requested, on

9-1-2016

Date

F. Appeals

The applicant, the owner, any person aggrieved by this Order, any owner of land abutting the land subject to this Order, or any ten residents of the city or town in which such land is located, are hereby notified of their right to request the appropriate MassDEP Regional Office to issue a Superseding Order of Conditions. The request must be made by certified mail or hand delivery to the Department, with the appropriate filing fee and a completed Request for Departmental Action Fee Transmittal Form, as provided in 310 CMR 10.03(7) within ten business days from the date of issuance of this Order. A copy of the request shall at the same time be sent by certified mail or hand delivery to the Conservation Commission and to the applicant, if he/she is not the appellant.

Any appellants seeking to appeal the Department's Superseding Order associated with this appeal will be required to demonstrate prior participation in the review of this project. Previous participation in the permit proceeding means the submission of written information to the Conservation Commission prior to the close of the public hearing, requesting a Superseding Order, or providing written information to the Department prior to issuance of a Superseding Order.

The request shall state clearly and concisely the objections to the Order which is being appealed and how the Order does not contribute to the protection of the interests identified in the Massachusetts Wetlands Protection Act (M.G.L. c. 131, § 40), and is inconsistent with the wetlands regulations (310 CMR 10.00). To the extent that the Order is based on a municipal ordinance or bylaw, and not on the Massachusetts Wetlands Protection Act or regulations, the Department has no appellate jurisdiction.

Massachusetts Department of Environmental Protection
Bureau of Resource Protection - Wetlands
WPA Form 5 – Order of Conditions
Massachusetts Wetlands Protection Act M.G.L. c. 131, §40

Provided by MassDEP:
316-0717
MassDEP File #

eDEP Transaction #

Waltham
City/Town

G. Recording Information

Prior to commencement of work, this Order of Conditions must be recorded in the Registry of Deeds or the Land Court for the district in which the land is located, within the chain of title of the affected property. In the case of recorded land, the Final Order shall also be noted in the Registry's Grantor Index under the name of the owner of the land subject to the Order. In the case of registered land, this Order shall also be noted on the Land Court Certificate of Title of the owner of the land subject to the Order of Conditions. The recording information on this page shall be submitted to the Conservation Commission listed below.

Waltham
Conservation Commission

Detach on dotted line, have stamped by the Registry of Deeds and submit to the Conservation Commission.

To:

Waltham
Conservation Commission

Please be advised that the Order of Conditions for the Project at:

16 Pine Vale Road — Project Location
316-0717 — MassDEP File Number

Has been recorded at the Registry of Deeds of:

County ____ Book ____ Page ____

for: Property Owner ____

and has been noted in the chain of title of the affected property in:

Book ____ Page ____

In accordance with the Order of Conditions issued on:

Date ____

If recorded land, the instrument number identifying this transaction is:

Instrument Number ____

If registered land, the document number identifying this transaction is:

Document Number ____

Signature of Applicant ____

Waltham Conservation Commission
119 School Street
Waltham, MA 02451-4596

SPECIAL ORDERS OF CONDITIONS (V1.2)
AS ISSUED BY THE WALTHAM CONSERVATION COMMISSION

DEP File Number: 316-0717
Applicant: City of Waltham Recreation Department
Location: Graverson Playground: 16 Pine Vale Road
Date of Issuance: September 1, 2016

19. RECORDING AND ADMINISTRATION

A. Prior to any work on the site, or within six (6) weeks of the date of this Order, whichever comes first, this Order of Conditions shall be recorded at the Middlesex Registry of Deeds or Land Court and notice filed with the Commission pursuant to Condition 8. Failure to do so shall be deemed cause to revoke this Order.

B. In advance of any work on this project the applicant shall notify the Commission, and at the request of the Commission, shall arrange an on-site conference among the Commission, the contractor and the applicant to ensure that all of the conditions of this Order are understood.

C. This Order shall be made a part of all contracts and subcontracts dealing with the work proposed, and shall supersede all other conflicting contract requirements.

D. This Order shall apply to and be binding upon the applicant, its employees and all successors and assigns in interest or control.

E. Prior to any work being done on the project site, the applicant shall inform the Waltham Conservation Commission in writing of the names, addresses, business and home phone numbers of both the project supervisor who will be responsible for ensuring on-site compliance with this order and his/her alternate. The applicant shall also notify the Commission in writing of any changes in this information.

F. Members of the Commission or their agents shall have the right to enter upon and inspect the premises to evaluate compliance with this Order of Conditions.

G. Any changes differing from the aforementioned conditions must be submitted to the Commission for approval prior to their implementation. If the Commission finds, by

majority vote, said changes to be significant and/or deviate from the original plans, Notice of Intent, or the Order of Conditions, then the Commission may require a new Notice of Intent or call for another public hearing within 21 days, at the expense of the applicant, in order to take testimony from all interested parties. Within 21 days of the close of said public hearing, the Commission will issue an amended or new Order of Conditions.

H. Any errors found in the plans or information submitted by the applicant shall be considered as changes, and the procedures outlined in Condition "G" above shall be followed.

I. In conjunction with the sale of any portion of the site covered by this Order of Conditions, the applicant shall submit to the Commission a signed statement by the buyer that he/she is aware of outstanding Orders of Conditions.

J. The Commission may authorize its designated agent to act on its behalf in determining preconstruction compliance.

K. Special Conditions 21B, 22G, 23A, 23B, 23C, 23D, and 23E shall apply in perpetuity and shall not expire with the issuance of a Certificate of Compliance for this project.

20. PRIOR TO COMMENCEMENT OF WORK

A. Prior to any work on the project site, the proposed limit of work shall be clearly marked with stakes, flags or fencing and shall be approved in writing by the Commission. Such markers will be maintained until all construction on the site's perimeter is complete. All workers shall be informed that no construction activity is to occur beyond this line at any time.

B. Prior to any work on the project site, all trees greater than six (6) inches in diameter that are to be saved shall be protected from inadvertent damage by strapping boards around the trunk from ground level to a height of at least eight (8) feet. Completion of this project measure shall be approved in writing by the Commission. Such measures shall be maintained until all earthwork and grading is complete and then shall be removed. Trees that are not to be saved shall be cut and stumps removed.

C. Prior to any construction on the site, an erosion control barrier of a filter fabric fence backed by a row of double-staked straw bales shall be placed between all construction activities and wetland areas, in accordance with Erosion and Sedimentation Guidelines for Urban and Suburban Areas, Mass. DEP, March 1997. This barrier shall be inspected and approved in writing by the Commission. Upon completion of the project the applicant shall remove and discard to a suitable area, all straw bales and other materials determined to be detrimental to the resource areas.

D. The applicant shall have on hand at the start of any soil disturbance, removal or stockpiling, a minimum of 20% additional straw bales, in good condition and sufficient stakes for double staking these bales. Said bales shall be used only for the control of

emergency erosion problems and shall not be used for the normal control of erosion, as described in Condition "C".

21. LIMITS OF WORK/EROSION CONTROL

A. There shall be no activity (i.e. filling, alteration, regrading, removal of vegetation, etc.) related to this project within 50 feet of any resource area unless otherwise described in these orders and on the referenced plans.

B. As soon as possible during construction, all disturbed upland areas in the resource area or buffer zone shall be brought to final finished grade and stabilized permanently against erosion. This shall be done either by sodding, or by loaming, seeding, and mulching according to Natural Resources Conservation Service (formerly UDA) Soil Conservation Service Guidelines. If the latter course is chosen, stabilization will be considered completed once the surface shows complete vegetative cover. Bare ground that can not be permanently stabilized within thirty (30) days shall be stabilized by temporary measures.

22. DURING WORK

A. Accepted engineering and construction standards and procedures shall be followed in the completion of this project.

B. A copy of this Order of Conditions, as well as all construction and wetland replication plans, shall be on site upon commencement of any site work and made available to any person doing work on the site.

C. Site grading and construction shall be scheduled to avoid periods of high water. Once begun, grading and construction shall move uninterrupted to completion to avoid erosion and sedimentation of wetlands.

D. Any dewatering or drawdown activities on the project in which water will be released into a resource area or storm drain shall make use of a sedimentation tank or similar device to remove sediment before the water is released.

E. No earthen embankment in the buffer zone shall have a post construction slope steeper than 2:1.

F. There shall be no stockpiling of soil or other materials within fifty (50) feet of any resource area, except as described in the NOI and shown on the referenced plan.

G. During and after work on this project, there shall be no discharge or spillage of fuel, oil, or other pollutants into any resource area or buffer zone. The applicant shall take all reasonable precautions to prevent the release of pollutants by ignorance, accident, or vandalism.

23. UPON COMPLETION OF WORK

A. Storage of Petroleum Products

i. No underground storage of fuel oils shall be allowed within the resource area or buffer zone.

ii. There shall be no storage of petroleum products (e.g. motor oil, gasoline, diesel fuel, etc.) within the resource area or buffer zone on the site at any time, except for quantities commensurate with maintaining a multi-family unit.

B. Fertilizer, Pesticides and Herbicides

i. Fertilizers shall not be used within a resource area or fifty (50) feet from a resource area.

ii. Pesticides and herbicides shall not be used within a resource area or buffer zone.

C. Sodium chloride shall not be used for de-icing on the site. Signs of a minimum of two square feet stating such restriction shall be posted at all vehicle entrances.

D. Sand used in deicing shall be removed periodically during the winter and by May 1st of each year. Records of cleaning shall be maintained on site and mailed annually to the Commission by May 1st.

E. The storm drainage system shall be equipped with gas and oil traps. Catch basins shall be cleaned and maintained by the applicant every 3 months. Records of said cleaning shall be maintained on site and mailed annually to the Commission by May 1st.

23. SITE-SPECIFIC CONDITIONS

A. All areas of disturbance shall be kept clear of invasives for a minimum of two years following completion.

B. The O & M plan must be updated to include emptying the trash monthly or when receptacles are full, whichever occurs sooner.

C. The maintenance of the bioretention areas shall be updated to include a requirement to clean them out similar to the language in bullet 2 of the catch basin section.

Waltham Conservation Commission
August 18, 2016
Meeting Minutes

Meeting called to order at 7:02 p.m.

Attendees: Chairman Bill Doyle, Vice Chairman Philip Moser, Brad Baker, Gerard Dufromont, Tali Gill-Austern, Daniel Keleher (arrived at 7:06 p.m.)

Public Hearing (Continued from 7-21-2016)
Notice of Intent (DEP File #316-0717)
Applicant: City of Waltham
Property Location: Graverson Playground: 16 Pine Vale Road
Project Description: Improvements to the existing playground.

Ben Gary represented the applicant. He noted that ConCom members, the city's tree warden and neighbors attended the site visit. It was decided that the proposed sugar maple trees will be replaced with red maples, and the flowering pear trees will be replaced with common cherry trees. There is an existing chain-link fence along the baseball field which is in good condition, but covered with vines. They are proposing that the contractor remove the vegetation from the fence, cut it off, and clean up the area. They will remove deadwood near the wetlands. The bioretention areas may have invasives, therefore they are submitting a maintenance plan for removal of the invasives in the fall. Mr. Baker asked if there is knotweed in the wetland area. (No.) Mr. Moser stated that cutting back the knotweed in other areas on the property in the fall won't get rid of it. He would like a more robust removal procedure. Mr. Gill-Austern recommended that Mr. Baker look at the O and M plan asking him to rewrite it with recommendations on how to treat the invasives. Mr. Baker stated that many of the invasives cannot be removed and killed. They can only be smothered over the course of time, or pull them out if they are babies. Cutting the knotweed in the fall is not the time to cut it. It needs to be done in the spring and summer in order to stress it. CPW Dept. is responsible for maintaining the city's parks. Mr. Baker asked that the removal of kudzu vine and poison ivy also be addressed. Mr. Moser feels all of the invasives are covered under the commission's conditions.
Mr. Baker would like the commission to consult with the tree warden to determine the best way to help him do the tree identification and how to water the trees, especially during a drought.
Mr. Dufromont asked about removing trees and dead limbs in the wetlands. Mr. Gary noted that they will not go into the wetlands for any of the removal.
Mr. Gill-Austern asked about trash removal. Jimmy LaCrosse, Planning Dept., stated they will be setting up Bigbelly trash compactors. The receptacles will have monitors to let CPW know when they need to be emptied.
Mr. Doyle opened up comments from the public. There were none.
Motion made by Mr. Moser to close the public hearing, seconded by Mr. Baker. **Motion passed**.
Discussion: Mr. Gill-Austern asked about the accumulation of sediment and if there is a proposed action for it. Mr. Gary feels that a small sediment will occur in the trench drains and they can have them cleaned out. Mr. Gill-Austern asked that #2 under catch basins be added to #4 under bioretention areas in the O & M plan.
Motion made by Mr. Moser to issue a positive order of Conditions with the following site-specific conditions: 1) All areas of disturbance should be kept clear of invasives for a minimum of two years following completion; 2) The O & M plan must be updated to include emptying the trash monthly or when receptacles are full, whichever occurs sooner; 3) The maintenance of the bioretention areas be updated to include a requirement to clean them out similar to the language in bullet 2 of the catch basin section. Motion seconded by Mr. Gill-Austern. **Motion passed**.

Approved 9-8-2016

Construction Documents

Improvements to Elsie Turner Field

421 TRAPELO ROAD
WALTHAM, MASSACHUSETTS 02452

OCTOBER 31, 2017

ELSIE TURNER FIELD
421 Trapelo Rd

Locus Plan

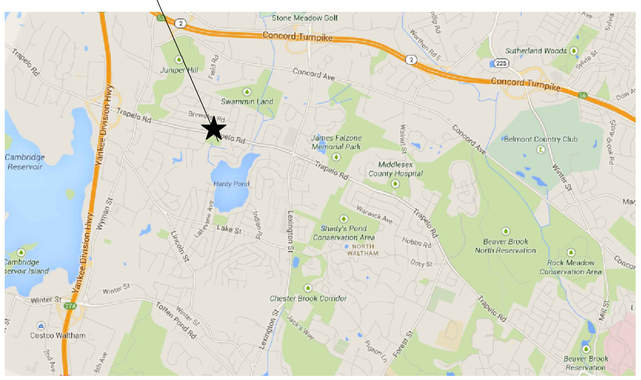

MAYOR JEANNETTE A. McCARTHY
CITY OF WALTHAM

CITY OF WALTHAM RECREATION DEPARTMENT
510 MOODY STREET
WALTHAM, MASSACHUSETTS 02453

LANDSCAPE ARCHITECT:
CAROLYN COONEY & ASSOCIATES

13 ELM STREET
MILFORD, MASSACHUSETTS 01757
TEL: (508) 478-8426
FAX: (508) 478-8607

SUBCONSULTANTS:
WILLIAMS & SPARAGES, LLC
CIVIL ENGINEERS
189 NORTH MAIN STREET
MIDDLETON, MA 01949
(978) 539-8088

SHEPARD ENGINEERING, INC.
ELECTRICAL CONSULTANTS
1308 GRAFTON STREET
WORCESTER, MA 01604
(508) 757-7793

Survey
GREEN INTERNATIONAL AFFILIATES, iNC.
CIVIL & STRUCTURAL ENGINEERS
WESTFORD, MA

Supplemental Survey:
ALPHA SURVEYING & ENGINEERING, INC.
695 WAREHAM STREET
MIDDLEBOROUGH, MA 02346
(508) 295-5505

Index of Drawings

SHT 1 OF 2	EXISTING CONDITIONS PLAN
SHT 2 0F 2	EXISTING CONDITIONS PLAN
L.101A,L.102A	SITE PREPARATION: TEMPORARY CONTROLS
L.101,L.102,L.103	SITE PREPARATION PLAN
L.201,L.202	MATERIALS PLAN
L.301,L.302	LAYOUT PLAN
L.401,L.402	GRADING & DRAINAGE PLAN
L.451,L.452	UTILITY COORDINATION PLAN
L.501,L.502	PLANTING PLAN
L.601	SITE PREPARATION DETAILS
L.602	PAVING DETAILS
L.603	PAVING, CURBING & FLAGPOLE DETAILS
L.604	STEEL GATE DETAILS
L.605	FENCING DETAILS
L.606	BACKSTOP DETAILS
L.607,L.607A,L.607B	SPORTS NETTING DETAILS
L.608	WELDED WIRE FENCE DETAILS
L.609	(INTENTIONALLY OMITTED)
L.610	PLAY EQUIPMENT FOOTING DETAILS
L.611	PLAYGROUND ENLARGEMENT&FOOTING DTLS
L.612	EXERCISE AREA ENLARGEMENT
L.613	EXERCISE EQUIPMENT DETAILS
L.614	DUGOUT SHELTER DETAILS
L.615	SCOREBOARD/SOFTBALL FIELD DETAILS
L.616	FOUL POLE/BLEACHER DETAILS
L.617	FIELD LIGHTING LAYOUT & DETAILS
L.618	SITE FURNITURE DETAILS 1
L.619	SITE FURNITUTE DETAILS 2
L.620	SHADE SHELTER DETAILS
L.621	PARKING LOT SIGNAGE/STRIPING
L.622	PLANTING DETAILS
L.623	(INTENTIONALLY OMITTED)
L.624	(INTENTIONALLY OMITTED)
L.625	IRRIGATION WATER SERVICE DETAILS
L.626	IRRIGATION WATER SERVICE DETAILS
L.701, L.702	IRRIGATION PLAN
L.703	IRRIGATION DETAILS
ES-1A, E-1B	SITE PLAN: ELECTRICAL
ES-2	ELECTRICAL DETAILS
C-1	DRAINAGE DETAILS
S-1	RETAINING WALL DETAILS

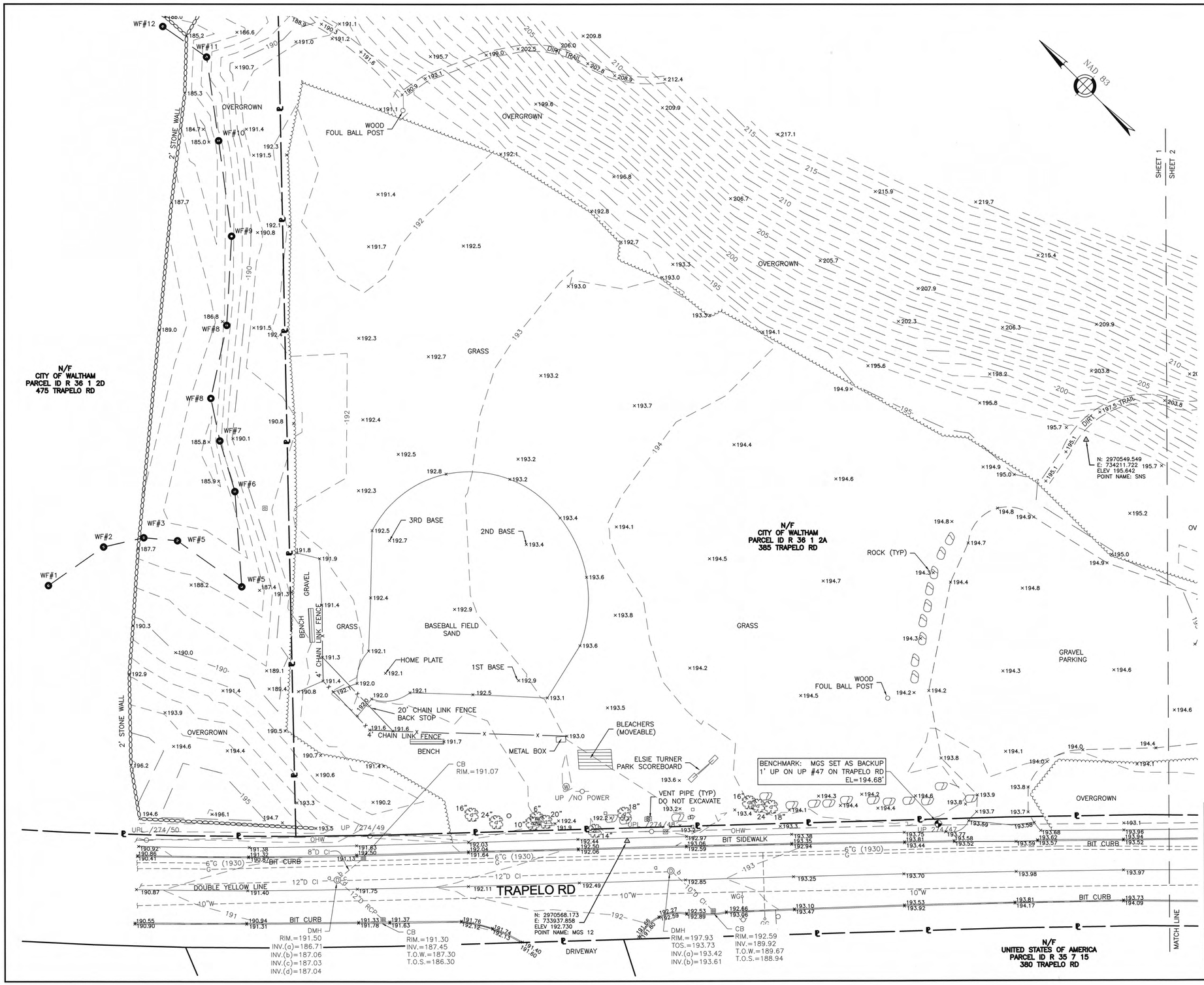

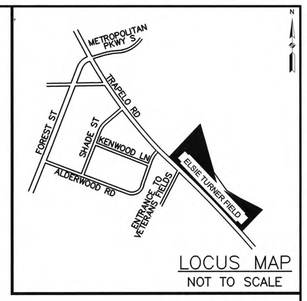

ELSIE TURNER BASEMAP.DWG Plotted on 19-Mar-2015 9:40 AM

COMMONWEALTH OF MASSACHUSETTS
KEVIN D. ARSENAULT No. 43285 PROFESSIONAL LICENSED SURVEYOR
3/19/15

SEE NOTES AND LEGEND ON SHEET 2.

0 20 50 100

WALTHAM, MASSACHUSETTS

EXISTING CONDITIONS PLAN
ELSIE TURNER FIELD

SURVEYED FOR
WESTON & SAMPSON

GREEN INTERNATIONAL AFFILIATES, INC.
CIVIL AND STRUCTURAL ENGINEERS WESTFORD, MASSACHUSETTS

SCALE 1"=20'	DATE 9-19-2014		PROJECT NO. 14028
APPROVED:	DESIGNED BY: .		SHEET NO.
	DRAWN BY: NL		1 OF 2
	CHECKED BY: KDA		

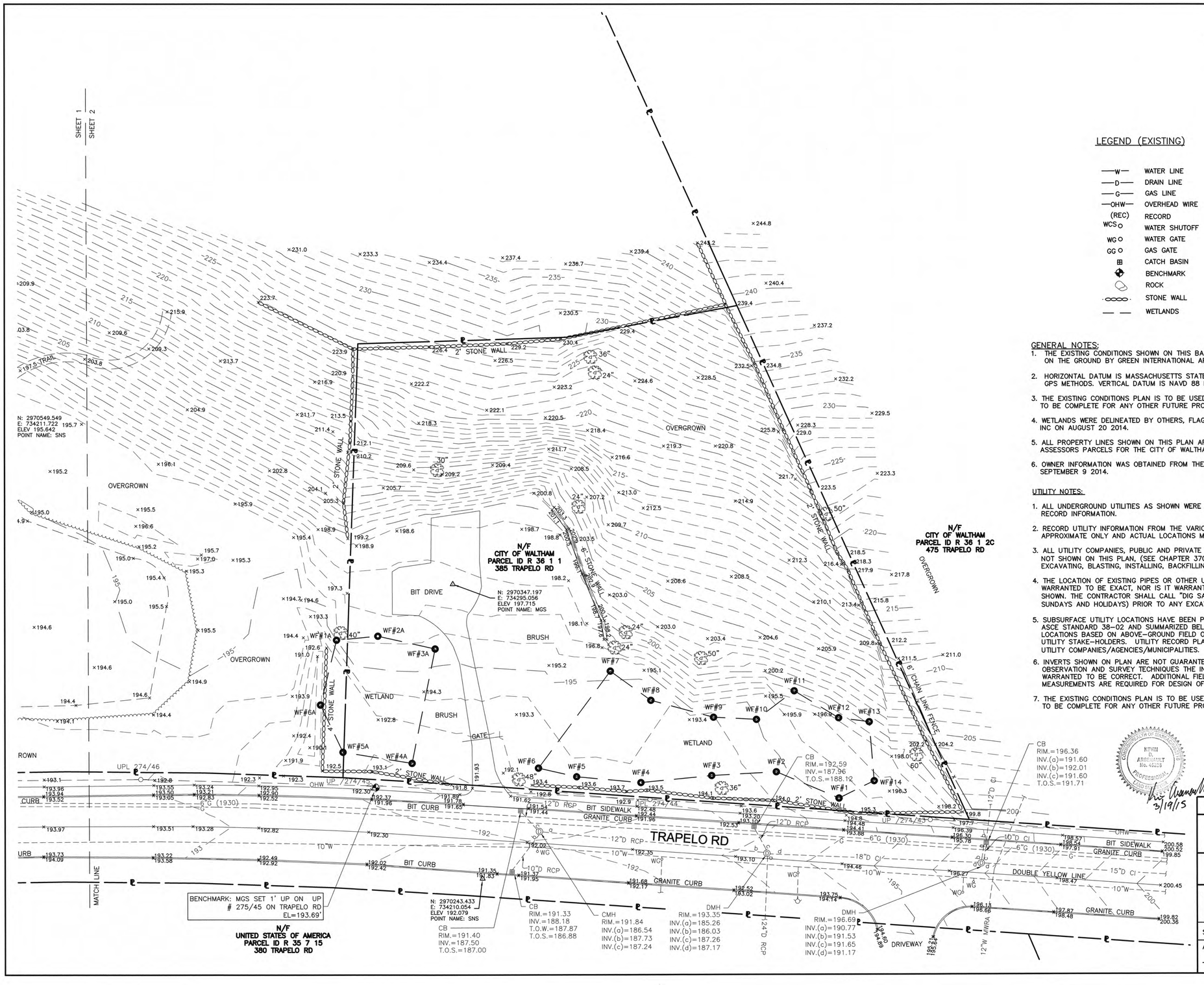

NAD 83

LEGEND (EXISTING)

—W—	WATER LINE	DMH	DRAIN MANHOLE
—D—	DRAIN LINE	6"	6" TREE
—G—	GAS LINE	HYD.	HYDRANT
—OHW—	OVERHEAD WIRE		SIGN
(REC)	RECORD		ELECTRIC LIGHT POLE
WCS	WATER SHUTOFF	×200.7	SPOT ELEVATION
WG	WATER GATE	T.O.S.	TOP OF SEDIMENT
GG	GAS GATE	T.O.W.	TOP OF WATER
	CATCH BASIN		TRAVERSE POINT
	BENCHMARK		WETLAND FLAG
	ROCK		TREE LINE
	STONE WALL		TRAIL
	WETLANDS	—PL—	APPROXIMATE PARCEL LINE

GENERAL NOTES:

1. THE EXISTING CONDITIONS SHOWN ON THIS BASEMAP ARE THE RESULT AN INSTRUMENT SURVEY PERFORMED ON THE GROUND BY GREEN INTERNATIONAL AFFILIATES, INC. IN AUGUST, 2014.
2. HORIZONTAL DATUM IS MASSACHUSETTS STATE PLANE COORDINATE SYSTEM (NAD83) ESTABLISHED BY STATIC GPS METHODS. VERTICAL DATUM IS NAVD 88 ESTABLISHED WITH STATIC GPS METHODS.
3. THE EXISTING CONDITIONS PLAN IS TO BE USED FOR THE SPECIFIED PROJECT ONLY AND IS NOT WARRANTED TO BE COMPLETE FOR ANY OTHER FUTURE PROJECTS.
4. WETLANDS WERE DELINEATED BY OTHERS, FLAGS WERE FIELD LOCATED BY GREEN INTERNATIONAL AFFILIATES, INC ON AUGUST 20 2014.
5. ALL PROPERTY LINES SHOWN ON THIS PLAN ARE APPROXIMATE ONLY, OBTAINED FROM THE MASS GIS LEVEL 3 ASSESSORS PARCELS FOR THE CITY OF WALTHAM, FISCAL YEAR 2012.
6. OWNER INFORMATION WAS OBTAINED FROM THE CITY OF WALTHAM PROPERTY ASSESSMENT WEBSITE AS OF SEPTEMBER 9 2014.

UTILITY NOTES:

1. ALL UNDERGROUND UTILITIES AS SHOWN WERE COMPILED USING FIELD SURVEY INFORMATION AND AVAILABLE RECORD INFORMATION.
2. RECORD UTILITY INFORMATION FROM THE VARIOUS UTILITY COMPANIES AND PUBLIC AGENCIES, ARE APPROXIMATE ONLY AND ACTUAL LOCATIONS MUST BE DETERMINED IN THE FIELD.
3. ALL UTILITY COMPANIES, PUBLIC AND PRIVATE MUST BE NOTIFIED, INCLUDING THOSE IN CONTROL OF UTILITIES NOT SHOWN ON THIS PLAN, (SEE CHAPTER 370, ACTS OF 1963, MASSACHUSETTS) PRIOR TO DESIGNING, EXCAVATING, BLASTING, INSTALLING, BACKFILLING, GRADING, PAVEMENT RESTORING OR REPAVING.
4. THE LOCATION OF EXISTING PIPES OR OTHER UNDERGROUND STRUCTURES OR PROPERTY LINES ARE NOT WARRANTED TO BE EXACT, NOR IS IT WARRANTED THAT ALL UNDERGROUND PIPES OR STRUCTURES ARE SHOWN. THE CONTRACTOR SHALL CALL "DIG SAFE" (1-888-344-7233) 72 HOURS (EXCLUDING SATURDAYS, SUNDAYS AND HOLIDAYS) PRIOR TO ANY EXCAVATION TO OBTAIN ACCURATE UTILITY LOCATIONS.
5. SUBSURFACE UTILITY LOCATIONS HAVE BEEN PLOTTED TO MEET UTILITY QUAILTY LEVEL "C" AS DESCRIBED IN ASCE STANDARD 38-02 AND SUMMARIZED BELOW. THE UNDERGROUND UTILITIES ARE SHOWN IN APPROXIMATE LOCATIONS BASED ON ABOVE-GROUND FIELD OBSERVATION AND EXISTING RECORD INFORMATION RECEIVED FROM UTILITY STAKE-HOLDERS. UTILITY RECORD PLANS WERE REQUESTED AND RECEIVED FROM THE FOLLOWING UTILITY COMPANIES/AGENCIES/MUNICIPALITIES.
6. INVERTS SHOWN ON PLAN ARE NOT GUARANTEED TO BE ACCURATE. DUE TO THE LIMITATIONS OF FIELD OBSERVATION AND SURVEY TECHNIQUES THE INVERTS ARE SHOWN AS APPROXIMATE ONLY AND SHALL NOT BE WARRANTED TO BE CORRECT. ADDITIONAL FIELD INVESTIGATION IS NECESSARY WHERE ACCURATE MEASUREMENTS ARE REQUIRED FOR DESIGN OF CRITICAL AREAS.
7. THE EXISTING CONDITIONS PLAN IS TO BE USED FOR THE SPECIFIED PROJECT ONLY AND IS NOT WARRANTED TO BE COMPLETE FOR ANY OTHER FUTURE PROJECTS.

COMMONWEALTH OF MASSACHUSETTS
KEVIN D. ARSENAULT
No. 42223
PROFESSIONAL LAND SURVEYOR
3/19/15

0 20 50 100

WALTHAM, MASSACHUSETTS

EXISTING CONDITIONS PLAN
ELSIE TURNER FIELD

SURVEYED FOR
WESTON & SAMPSON

GREEN INTERNATIONAL AFFILIATES, INC.
CIVIL AND STRUCTURAL ENGINEERS WESTFORD, MASSACHUSETTS

SCALE 1"=20'	DATE 9-19-2014	PROJECT NO. 14028
APPROVED:	DESIGNED BY: . DRAWN BY: NL CHECKED BY: KDA	SHEET NO. 2 OF 2

ELSIE TURNER BASEMAP.DWG Plotted on 19-Mar-2015 9:40 AM

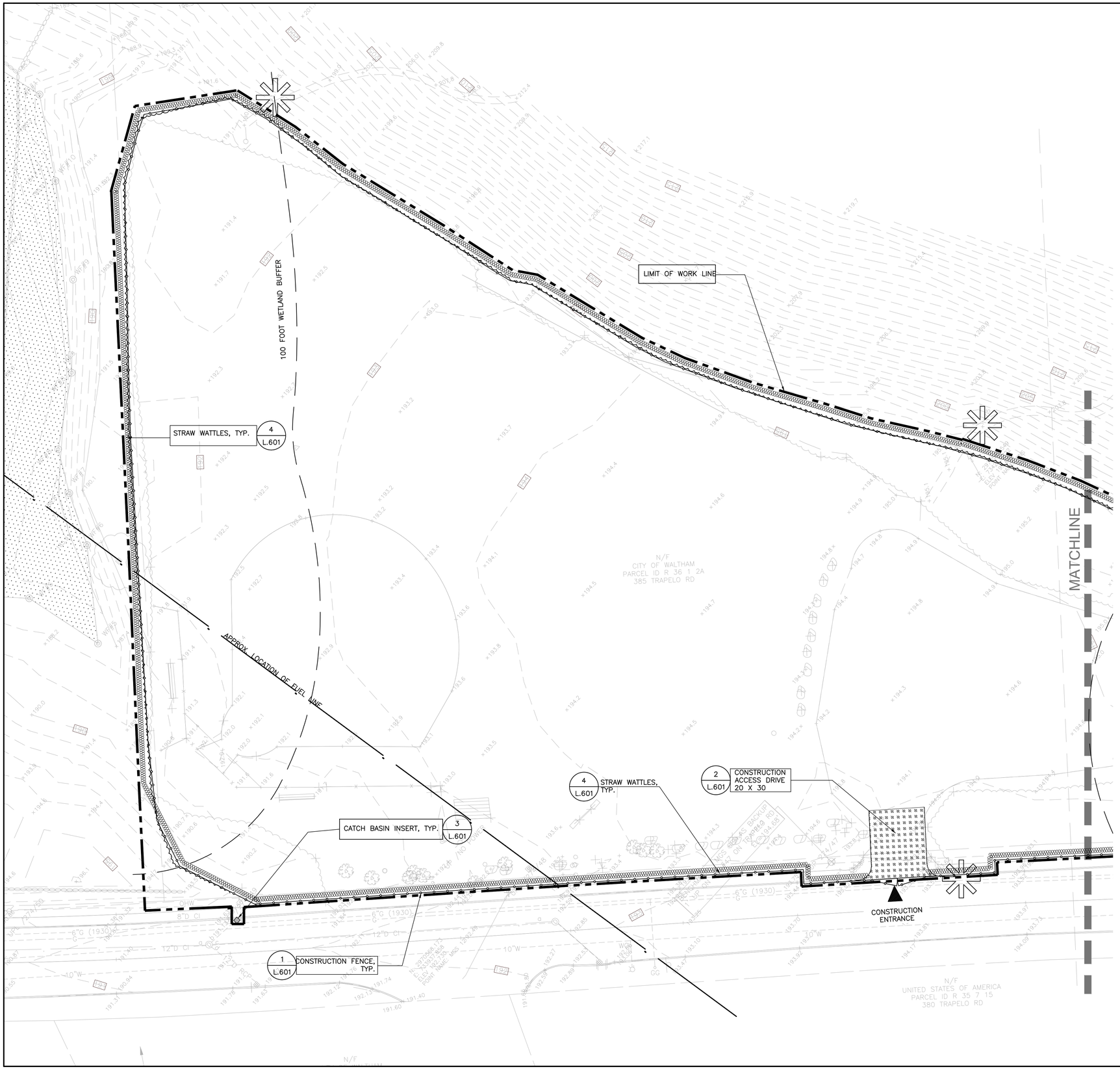

SITE PREPARATION & DEMOLITION LEGEND

L.O.W.	LIMIT OF WORK LINE
	TEMPORARY CONSTRUCTION ENTRANCE
	PROTECTED WETLAND
	STRAW WATTLE
	CONSTRUCTION FENCE, TYP.
	CATCH BASIN INSERT
	PARK CLOSURE SIGN – REFER TO SPEC SECTION 01500 – TEMPORARY CONTROLS & FACILITIES
	EXISTING TREES TO REMAIN
TYP.	TYPICAL

SPECIAL NOTES:

1. THE WORK OF THIS CONTRACT IS SUBJECT TO AN ORDER OF CONDITIONS ISSUED BY THE WALTHAM CONSERVATION COMMISSION. SEE SPEC SECTION 01571 AND APPENDIX A, ORDER OF CONDITIONS.
2. PRIOR TO BEGINNING CONSTRUCTION, PROVIDE EROSION CONTROLS AND DEP WETLANDS FILE NO. SIGN AS REQUIRED BY THE ORDER OF CONDITIONS. DO NOT BEGIN WORK UNTIL APPROVAL OF EROSION CONTROLS BY THE CONSERVATION COMMISSION.
3. PROVIDE 4 PARK CLOSURE SIGNS ATTACHED TO SECURITY FENCE (SEE SPECIFICATIONS SECTION 01500–TEMPORARY FACILITIES & CONTROLS).
4. THERE SHALL BE NO STOCKPILING OF LOAM WITH 50' OF THE WETLAND LINE.
5. AN EXXON PETROLEUM PIPELINE (1–800–537–5000) UNDERLIES SOME OF THE PROPOSED IMPROVEMENTS. THE PIPELINE SHALL BE MARKED ON–SITE BY DIG–SAFE OR THE UTILITY OWNER. SHOULD THERE BE CONFLICTS WITH THE PROPOSED IMPROVEMENTS, NOTIFY THE LANDSCAPE ARCHITECT PRIOR TO PROCEEDING WITH EXCAVATION.
6. A SYNESYS FIBER OPTIC CABLE (1–800–286–6644) IS LOCATED ON–SITE AND SHALL BE MARKED IN THE FIELD BY DIG–SAFE OR THE UTILITY OWNER. SHOULD THERE BE CONFLICTS WITH THE PROPOSED IMPROVEMENTS, NOTIFY THE LANDSCAPE ARCHITECT PRIOR TO PROCEEDING WITH EXCAVATION.

GENERAL NOTES:

1. BIDDERS ARE REQUIRED TO INSPECT THE SITE TO VERIFY EXISTING CONDITIONS AND WILL BE HELD RESPONSIBLE FOR THE FULL EXTENT OF WORK REQUIRED. THE CONTRACTOR SHALL INCLUDE IN HIS BID PRICE THE REMOVAL OF ALL EXISTING SITE FEATURES NECESSARY TO CONSTRUCT PROPOSED SITE IMPROVEMENTS.
2. THE CONTRACTOR SHALL REPORT ALL DEVIATIONS IN THE EXISTING CONDITIONS TO THE LANDSCAPE ARCHITECT (508) 478–8426, PRIOR TO STARTING WORK.
3. LOCATION AND DEPTH OF UTILITIES ARE APPROXIMATE. NO GUARANTEE IS EXPRESSED OR IMPLIED THAT THE DRAWINGS INDICATE ALL UTILITIES WHICH MAY EXIST. PRIOR TO ANY EXCAVATION, CONTACT "DIG SAFE" (811) TO MARK LOCATION OF RECORDED UTILITIES.
4. THE CONTRACTOR SHALL PROTECT ABUTTING PROPERTIES AND EXISTING SITE ELEMENTS TO REMAIN. ANY DAMAGE INCURRED SHALL BE REPAIRED BY THE CONTRACTOR AT NO ADDITIONAL COST TO THE CITY OF WALTHAM.
5. PROVIDE TEMPORARY 6' HT. CHAIN LINK SECURITY FENCE AS SHOWN ON THE PLANS THROUGHOUT THE CONSTRUCTION PERIOD. IT SHALL BE THE CONTRACTOR'S RESPONSIBILITY TO PROVIDE ADDITIONAL FENCING AS NECESSARY TO ADEQUATELY SECURE THE SITE FOR THE HEALTH & SAFETY OF THE GENERAL PUBLIC.
6. THERE SHALL BE NO STOCKPILING OF MATERIALS OR HEAVY EQUIPMENT WITHIN THE CANOPY OF EXISTING TREES TO REMAIN.
7. THE CONTRACTOR SHALL PERIODICALLY WATER THROUGHOUT THE CONSTRUCTION PERIOD ANY EXISTING TREES TO REMAIN WHOSE ROOTS HAVE BEEN DISTURBED BY EXCAVATION. MAINTAIN THROUGHOUT THE CONSTRUCTION PERIOD, A SOURCE OF WATER SUCH AS A WATER TRUCK OR PERMITTED CONNECTION TO CITY HYDRANT.
8. PROVIDE DUST CONTROL THROUGHOUT THE CONSTRUCTION PERIOD UNTIL ALL SURFACES ARE PERMANENTLY STABILIZED. THE CONTRACTOR SHALL INCLUDE IN THE BID PRICE SUFFICIENT MONEY TO MAINTAIN A WATER TRUCK OR OTHER APPROVED SOURCE OF WATER AT ALL TIMES ON–SITE, AND SHALL WET DOWN SURFACES AS NECESSARY TO CONTROL DUST AND AS DIRECTED BY THE LANDSCAPE ARCHITECT.

0 20 40 60

Carolyn Cooney & Associates
Landscape Architecture / Planning
13 Elm Street, Milford, MA 01757
Telephone 508 478 8426, Facsimile 508 478 8607

No.	Description	Date

REVISIONS

North

Project:

CITY OF WALTHAM
ELSIE TURNER FIELD
421 TRAPELO ROAD
WALTHAM, MA 02452

Prepared For:

CITY OF WALTHAM
DEPARTMENT OF RECREATION
510 MOODY STREET
WALTHAM, MA 02453

TITLE:

SITE PREPARATION: TEMPORARY CONTROLS

Scale	1"=20'	Date	OCT. 31, 2017
Drawn By	CCC		
Checked By	DRB		
Approved By	CCC		
Project No.	1710.00		

DWG No. L.101A

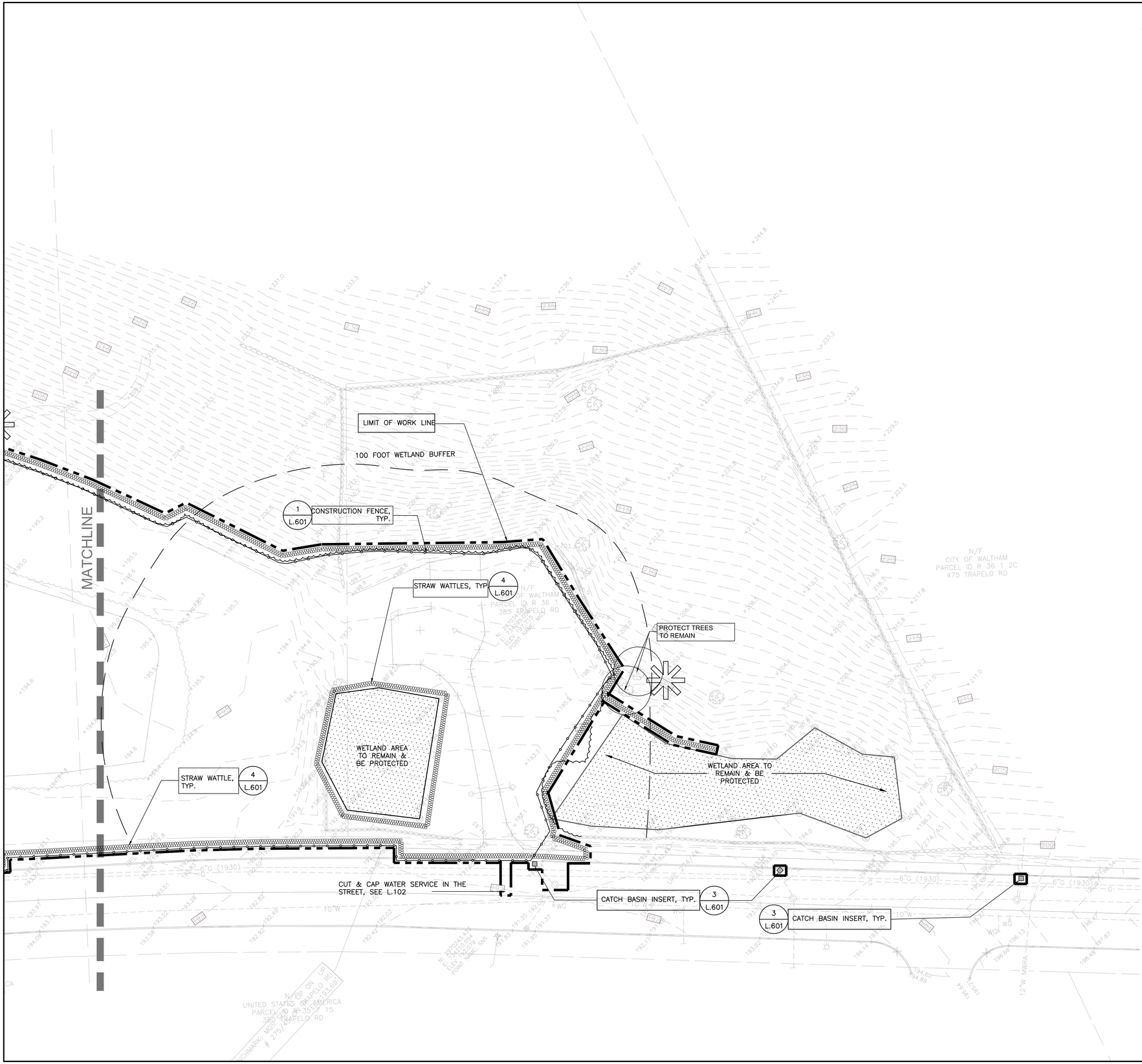

SITE PREPARATION & DEMOLITION LEGEND

L.O.W.	LIMIT OF WORK LINE
	TEMPORARY CONSTRUCTION ENTRANCE
	PROTECTED WETLAND
	STRAW WATTLE
	CONSTRUCTION FENCE, TYP.
	CATCH BASIN INSERT
	PARK CLOSURE SIGN – REFER TO SPEC SECTION 01500 – TEMPORARY CONTROLS & FACILITIES
	EXISTING TREES TO REMAIN
TYP.	TYPICAL

Carolyn Cooney & Associates

Landscape Architecture / Planning

13 Elm Street, Milford, MA 01757
Telephone 508 478 8426, Facsimile 508 478 8607

No.	Description	Date

REVISIONS

North

Project:

CITY OF WALTHAM
ELSIE TURNER FIELD
421 TRAPELO ROAD
WALTHAM, MA 02452

Prepared For:

CITY OF WALTHAM
DEPARTMENT OF RECREATION
510 MOODY STREET
WALTHAM, MA 02453

TITLE:

SITE PREPARATION: TEMPORARY CONTROLS

Scale	1"=20'	Date	OCT. 31, 2017
Drawn By	CCC		
Checked By	DRB		
Approved By	CCC		
Project No.	1710.00		

DWG No. L.102A

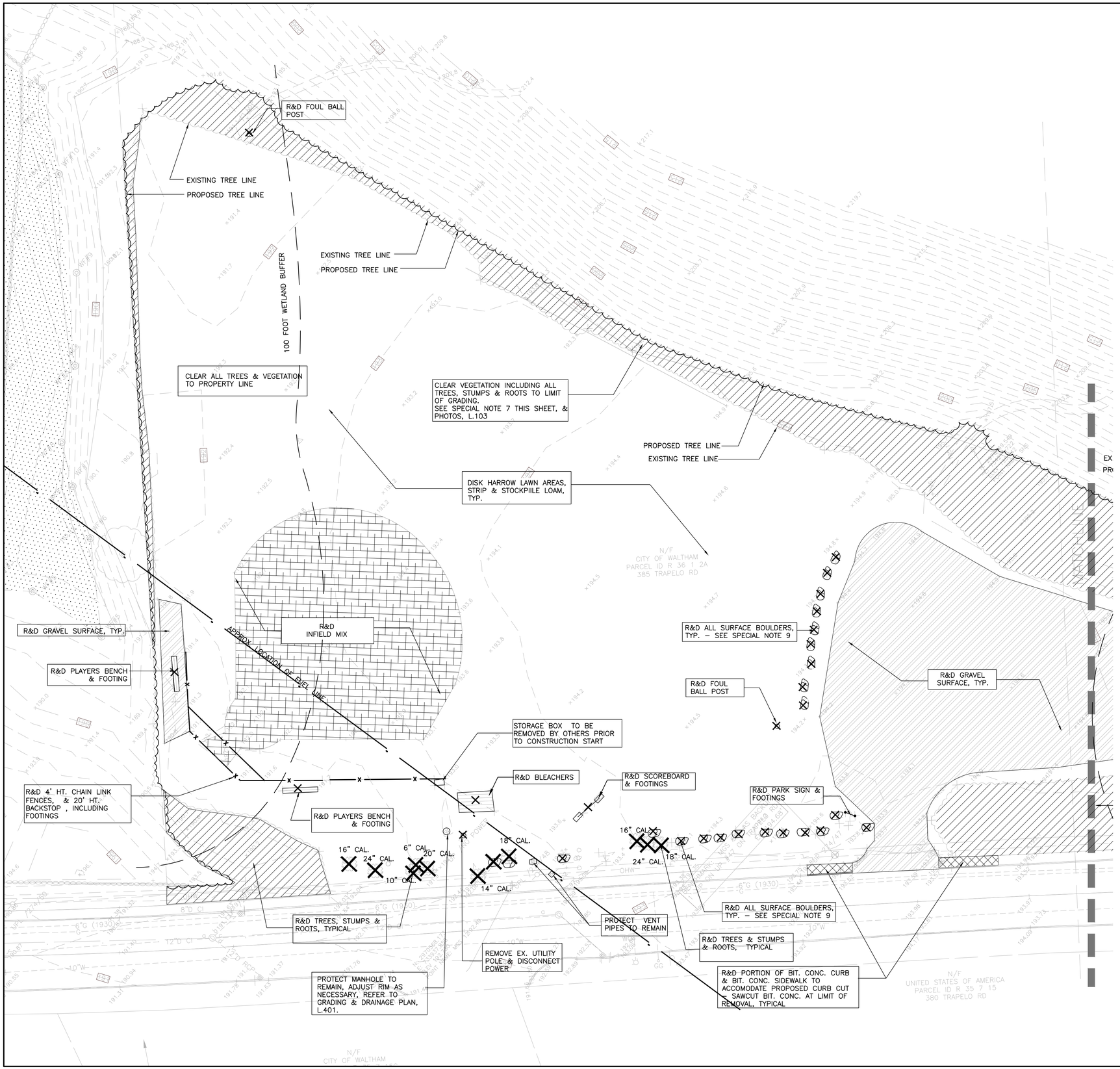

SITE PREPARATION & DEMOLITION LEGEND

- PROTECTED WETLAND
- R&D BITUMINOUS CONCRETE PAVING
- R&D GRAVEL SURFACE
- R&D TREES, SHRUBS AND ALL OTHER VEGETATION. REMOVE STUMPS & ROOTS.
- R&D INFIELD MIX
- R&D CURB, TYP.
- REMOVE & DISPOSE OF EXISTING SITE ELEMENTS

TYP. TYPICAL
R & D REMOVE AND DISPOSE
R & R REMOVE AND REPLACE
R & S REMOVE AND SALVAGE

SPECIAL NOTES:

1. THE WORK OF THIS CONTRACT IS SUBJECT TO AN ORDER OF CONDITIONS ISSUED BY THE WALTHAM CONSERVATION COMMISSION. SEE SPEC SECTION 01571 AND APPENDIX A, ORDER OF CONDITIONS.
2. PRIOR TO BEGINNING CONSTRUCTION, PROVIDE EROSION CONTROLS AND DEP WETLANDS FILE NO. SIGN AS REQUIRED BY THE ORDER OF CONDITIONS. DO NOT BEGIN WORK UNTIL APPROVAL OF EROSION CONTROLS BY THE CONSERVATION COMMISSION. REFER TO SHEETS 101A & 101B FOR LOCATION OF EROSION CONTROLS. REFLAG WETLANDS IF FLAGS NOTED ON SURVEY ARE MISSING.
3. AN EXXON PETROLEUM PIPELINE (1–800–537–5000) UNDERLIES SOME OF THE PROPOSED IMPROVEMENTS. THE PIPELINE SHALL BE MARKED ON–SITE BY DIG–SAFE OR THE UTILITY OWNER. SHOULD THERE BE CONFLICTS WITH THE PROPOSED IMPROVEMENTS, NOTIFY THE LANDSCAPE ARCHITECT PRIOR TO PROCEEDING WITH EXCAVATION.
4. A SYNESYS FIBER OPTIC CABLE (1–800–286–6644) IS LOCATED ON–SITE AND SHALL BE MARKED IN THE FIELD BY DIG–SAFE OR THE UTILITY OWNER. SHOULD THERE BE CONFLICTS WITH THE PROPOSED IMPROVEMENTS, NOTIFY THE LANDSCAPE ARCHITECT PRIOR TO PROCEEDING WITH EXCAVATION.
5. PROVIDE 4 PARK CLOSURE SIGNS ATTACHED TO SECURITY FENCE (SEE SPECIFICATIONS SECTION 01500–TEMPORARY FACILITIES & CONTROLS).
6. THERE SHALL BE NO STOCKPILING OF LOAM WITHIN 50' OF THE WETLAND LINE PER ORDER OF CONDITIONS.
7. IT IS MANDATORY THAT THE CONTRACTOR VISIT THE SITE TO ASSESS THE AMOUNT AND TYPE OF VEGETATION, IN AREAS SHOWN BY HATCHING, THAT IS TO BE REMOVED ALONG THE EASTERN PROPERTY LINE AND SOUTHERN 6' HT. BOUNDARY FENCE, APPROXIMATE DIMENSIONS TO THE EASTERN PROPERTY LINE ARE SHOWN ON THE PLANS TO ASSIST THE CONTRACTOR IN DELINEATION OF THE AREA TO BE CLEARED.
8. DELIVER REMOVED GRANITE CURBING TO CPW STREET DEPT AT 167 LEXINGTON STREET, WALTHAM, MA.
9. THE CONTRACTOR SHALL, BASED ON VISUAL SITE INSPECTION, INCLUDE IN HIS/HER BID THE COSTS FOR REMOVAL & DISPOSAL OF ALL SURFACE ROCKS NECESSARY TO CONSTRUCT PROPOSED IMPROVEMENTS REGARDLESS OF INDIVIDUAL ROCK CUBIC YARDAGE. REMOVAL & DISPOSAL OF PARTIALLY BURIED OR COMPLETELY BURIED ROCKS OR BOULDERS WILL BE PAID FOR AS DESCRIBED IN SECTION 02200 – EARTHWORK.

GENERAL NOTES:

1. BIDDERS ARE REQUIRED TO INSPECT THE SITE TO VERIFY EXISTING CONDITIONS AND WILL BE HELD RESPONSIBLE FOR THE FULL EXTENT OF WORK REQUIRED. THE CONTRACTOR SHALL INCLUDE IN HIS BID PRICE THE REMOVAL OF ALL EXISTING SITE FEATURES NECESSARY TO CONSTRUCT PROPOSED SITE IMPROVEMENTS.
2. THE CONTRACTOR SHALL REPORT ALL DEVIATIONS IN THE EXISTING CONDITIONS TO THE LANDSCAPE ARCHITECT (508) 478–8426, PRIOR TO STARTING WORK.
3. LOCATION AND DEPTH OF UTILITIES ARE APPROXIMATE. NO GUARANTEE IS EXPRESSED OR IMPLIED THAT THE DRAWINGS INDICATE ALL UTILITIES WHICH MAY EXIST. PRIOR TO ALL EXCAVATION, CONTACT "DIG SAFE" (811) TO MARK LOCATION OF RECORDED UTILITIES.
4. THE CONTRACTOR SHALL PROTECT ABUTTING PROPERTIES AND EXISTING SITE ELEMENTS TO REMAIN. ANY DAMAGE INCURRED SHALL BE REPAIRED BY THE CONTRACTOR AT NO ADDITIONAL COST TO THE CITY OF WALTHAM.
5. PROVIDE TEMPORARY 6' HT. CHAIN LINK SECURITY FENCE AS SHOWN ON THE PLANS THROUGHOUT THE CONSTRUCTION PERIOD. PROVIDE ADDITIONAL FENCING AS NECESSARY TO ADEQUATELY SECURE THE SITE. REFER TO SHEETS 101A & B, TEMPORARY CONTROLS.
6. THERE SHALL BE NO STOCKPILING OF MATERIALS OR HEAVY EQUIPMENT WITHIN THE CANOPY OF EXISTING TREES TO REMAIN. THE CONTRACTOR SHALL PERIODICALLY WATER THROUGHOUT THE CONSTRUCTION PERIOD ANY EXISTING TREES TO REMAIN WHOSE ROOTS HAVE BEEN DISTURBED BY EXCAVATION. MAINTAIN THROUGHOUT THE CONSTRUCTION PERIOD, A SOURCE OF WATER SUCH AS A WATER TRUCK OR PERMITTED CONNECTION TO CITY HYDRANT.
7. REMOVAL & DISPOSAL OF ITEMS SHALL INCLUDE FOOTINGS. REMOVAL & DISPOSAL OF TREES SHALL INCLUDE STUMPS AND ROOT SYSTEMS, UNLESS OTHERWISE NOTED.

0 20 40 60

Carolyn Cooney & Associates
Landscape Architecture / Planning
13 Elm Street, Milford, MA 01757
Telephone 508 478 8426, Facsimile 508 478 8607

No.	Description	Date

REVISIONS

North

Project:

CITY OF WALTHAM
ELSIE TURNER FIELD
421 TRAPELO ROAD
WALTHAM, MA 02452

Prepared For:

CITY OF WALTHAM
DEPARTMENT OF RECREATION
510 MOODY STREET
WALTHAM, MA 02453

TITLE:

SITE PREPARATION PLAN

Scale 1"=20' Date OCT. 31, 2017
Drawn By CCC
Checked By DRB
Approved By CCC
Project No. 1710.00

DWG No. L.101

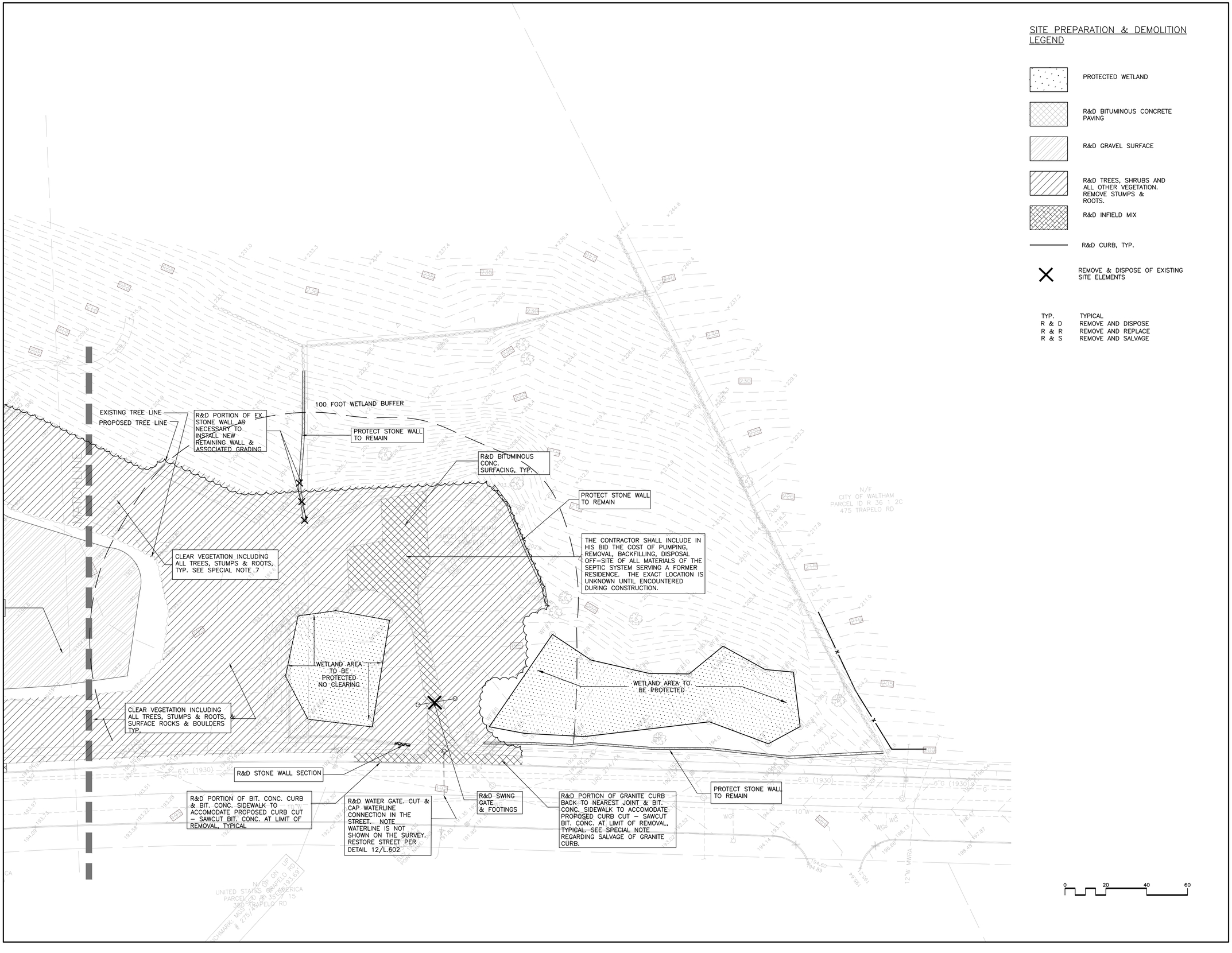

SITE PREPARATION & DEMOLITION LEGEND

- PROTECTED WETLAND
- R&D BITUMINOUS CONCRETE PAVING
- R&D GRAVEL SURFACE
- R&D TREES, SHRUBS AND ALL OTHER VEGETATION. REMOVE STUMPS & ROOTS.
- R&D INFIELD MIX
- R&D CURB, TYP.
- REMOVE & DISPOSE OF EXISTING SITE ELEMENTS

TYP.	TYPICAL
R & D	REMOVE AND DISPOSE
R & R	REMOVE AND REPLACE
R & S	REMOVE AND SALVAGE

Carolyn Cooney & Associates
Landscape Architecture / Planning
13 Elm Street, Milford, MA 01757
Telephone 508 478 8426, Facsimile 508 478 8607

No.	Description	Date

REVISIONS

North

Project:

CITY OF WALTHAM
ELSIE TURNER FIELD
421 TRAPELO ROAD
WALTHAM, MA 02452

Prepared For:

CITY OF WALTHAM
DEPARTMENT OF RECREATION
510 MOODY STREET
WALTHAM, MA 02453

TITLE:

SITE PREPARATION PLAN

Scale	1"=20'	Date	OCT. 31, 2017
Drawn By	CCC		
Checked By	DRB		
Approved By	CCC		
Project No.	1710.00		

DWG No. L.102

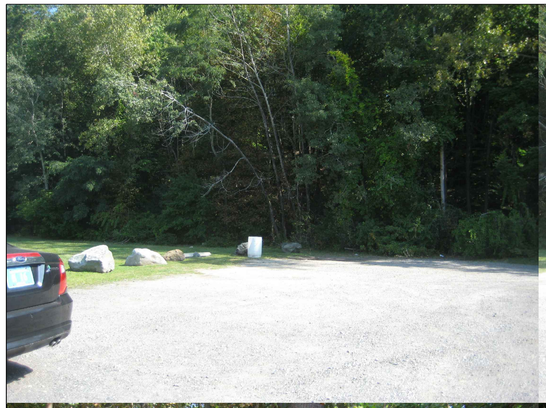
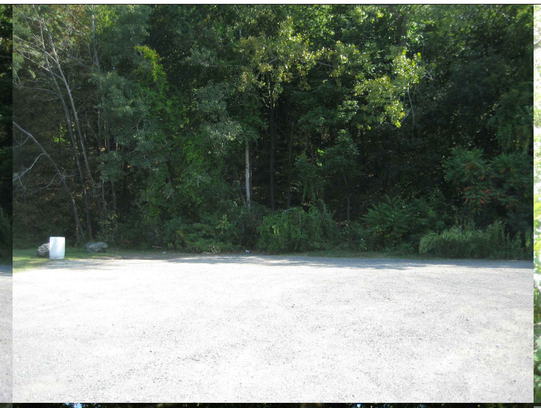

NOTE: THE SURVEY DOES NOT SHOW INDIVIDUAL TREES OF LARGE CALIPER IN AREA NOTED TO BE CLEARED. THE CONTRACTOR IS REQUIRED TO VISIT THE SITE TO INFORM HIM/HERSELF OF THE CALIPER AND NUMBER OF TREES TO BE REMOVED. THE ABOVE PHOTOS ARE REPRESENTATIVE OF THE VARIETY OF SITE VEGETATION, BUT DO NOT DOCUMENT ALL TRESS TO BE CLEARED.

Carolyn Cooney & Associates

Landscape Architecture / Planning

13 Elm Street, Milford, MA 01757
Telephone 508 478 8426, Facsimile 508 478 8607

No.	Description	Date

REVISIONS

North

Project:

CITY OF WALTHAM
ELSIE TURNER FIELD
421 TRAPELO ROAD
WALTHAM, MA 02452

Prepared For:

CITY OF WALTHAM
DEPARTMENT OF RECREATION
510 MOODY STREET
WALTHAM, MA 02453

TITLE:

SITE PREPARATION PLAN

Scale	1"=20'	Date	OCT. 31, 2017
Drawn By	CCC		
Checked By	DRB		
Approved By	CCC		
Project No.	1710.00		

DWG No. L.103

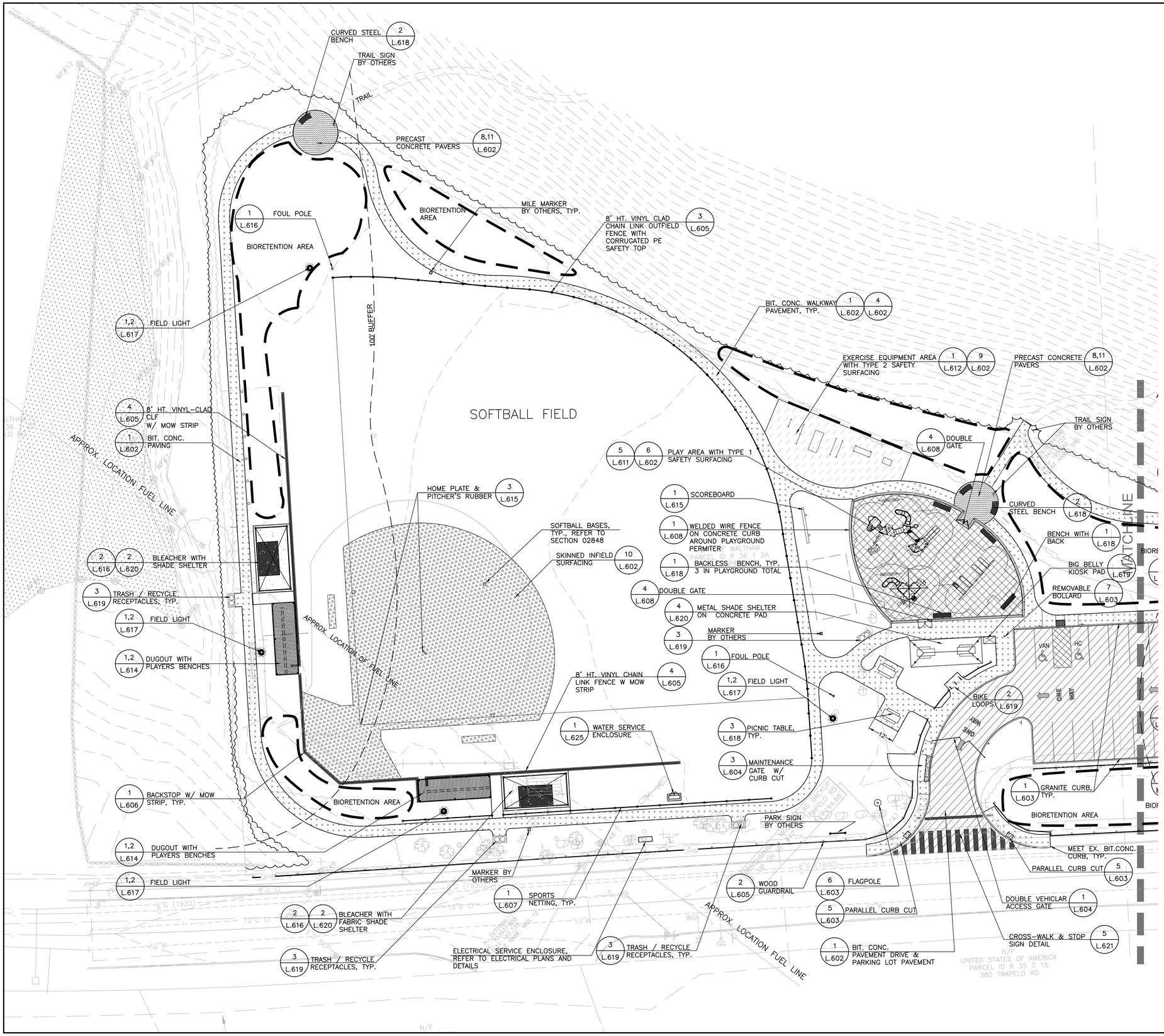

MATERIALS LEGEND

- BITUMINOUS CONCRETE WALKWAY PAVING
- BITUMINOUS CONCRETE PARKING LOT/DRIVE PAVING
- PRECAST CONCRETE PAVERS ON BITUMINOUS SETTING BED WITH CONCRETE BASE
- POURED-IN-PLACE RUBBER SAFETY SURFACING – TYPE 1
- RUBBER SAFETY SURFACING – TYPE 2
- CONCRETE SLAB OR PAVING
- SKINNED INFIELD MIX
- GRAVEL TRENCH
- PROTECTED WETLAND

SPECIAL NOTES:

1. THE WORK OF THIS CONTRACT IS SUBJECT TO AN ORDER OF CONDITIONS ISSUED BY THE WALTHAM CONSERVATION COMMISSION. SEE SECTION 01571 AND APPENDIX OF THE SPECIFICATIONS.
2. PRIOR TO BEGINNING CONSTRUCTION, PROVIDE EROSION CONTROLS, DEP PROJECT SIGN. DO NOT BEGIN FURTHER WORK UNTIL APPROVAL BY THE CONSERVATION COMMISSION.
3. DO NOT STOCKPILE EARTHWORK MATERIALS WITHIN 50' OF WETLAND RESOURCE AREAS. CONSERVATION COMMISSION.
4. AN EXXON PETROLEUM PIPELINE (1-800-537-5000) UNDERLIES SOME OF THE PROPOSED IMPROVEMENTS. THE PIPELINE SHALL BE MARKED IN THE FIELD BY DIG-SAFE OR THE UTILITY OWNER. SHOULD THERE BE CONFLICTS WITH THE PROPOSED IMPROVEMENTS, NOTIFY THE LANDSCAPE ARCHITECT PRIOR TO EXCAVATION.
5. A SYNESYS FIBER OPTIC CABLE (1-800-286-6644) IS LOCATED ON-SITE AND SHALL BE MARKED IN THE FIELD BY DIG-SAFE OR THE UTILITY OWNER. SHOULD THERE BE CONFLICTS WITH THE PROPOSED IMPROVEMENTS, NOTIFY THE LANDSCAPE ARCHITECT PRIOR TO PROCEEDING WITH EXCAVATION.
6. PLAY EQUIPMENT WILL BE FURNISHED BY THE CITY TO BE INSTALLED BY THE CONTRACTOR. REFER TO SECTION 01400 CONTROL OF THE WORK FOR A DESCRIPTION OF THE CONTRACTOR'S RESPONSIBILITIES FOR RECEIVING, STORING AND INSPECTING OWNER FURNISHED MATERIALS AND SECTION 02860 PLAY EQUIPMENT FOR A DESCRIPTION OF THE EQUIPMENT
7. REFER TO L.621 FOR PARKING LOT SIGNAGE AND STRIPING PLAN
8. COORDINATE SIGN INSTALLATION BY OTHERS WITH THE WORK OF THIS CONTRACT.

GENERAL NOTES:

1. BIDDERS ARE REQUIRED TO INSPECT THE CONSTRUCTION SITE TO VERIFY EXISTING CONDITIONS AND WILL BE HELD RESPONSIBLE FOR THE FULL EXTENT OF WORK REQUIRED.
2. THE CONTRACTOR SHALL REPORT ALL DEVIATIONS IN THE EXISTING CONDITIONS TO THE LANDSCAPE ARCHITECT (508) 478-8426, PRIOR TO STARTING WORK.
3. LOCATION AND DEPTH OF UTILITIES ARE APPROXIMATE. NO GUARANTEE IS EXPRESSED OR IMPLIED THAT THE DRAWINGS INDICATE ALL UTILITIES WHICH MAY EXIST. PRIOR TO ANY EXCAVATION, CONTACT "DIG SAFE" (811) TO MARK LOCATION OF RECORDED UTILITIES.
4. THE CONTRACTOR SHALL PROTECT ABUTTING PROPERTIES AND EXISTING SITE ELEMENTS TO REMAIN. ANY DAMAGE INCURRED SHALL BE REPAIRED BY THE CONTRACTOR AT NO ADDITIONAL COST TO THE CITY OF WALTHAM.

Carolyn Cooney & Associates
Landscape Architecture / Planning
13 Elm Street, Milford, MA 01757
Telephone 508 478 8426, Facsimile 508 478 8607

No.	Description	Date

REVISIONS

North

Project:

CITY OF WALTHAM
ELSIE TURNER FIELD
421 TRAPELO ROAD
WALTHAM, MA 02452

Prepared For:

CITY OF WALTHAM
DEPARTMENT OF RECREATION
510 MOODY STREET
WALTHAM, MA 02453

TITLE:

MATERIALS PLAN

Scale 1"=20' Date OCT. 31, 2017
Drawn By CCC
Checked By DRB
Approved By CCC
Project No. 1710.00

DWG No. L.201

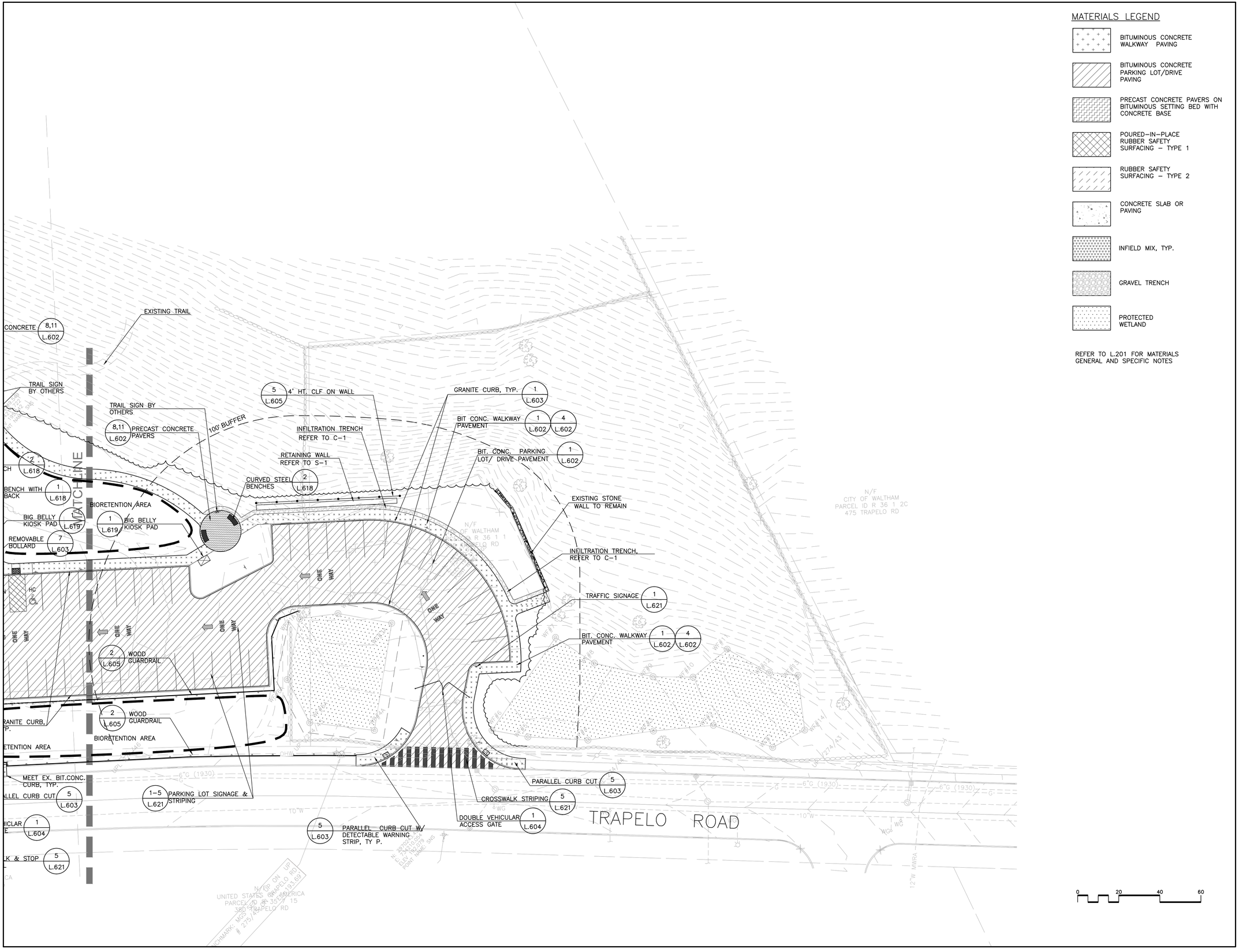

MATERIALS LEGEND

- BITUMINOUS CONCRETE WALKWAY PAVING
- BITUMINOUS CONCRETE PARKING LOT/DRIVE PAVING
- PRECAST CONCRETE PAVERS ON BITUMINOUS SETTING BED WITH CONCRETE BASE
- POURED-IN-PLACE RUBBER SAFETY SURFACING – TYPE 1
- RUBBER SAFETY SURFACING – TYPE 2
- CONCRETE SLAB OR PAVING
- INFIELD MIX, TYP.
- GRAVEL TRENCH
- PROTECTED WETLAND

REFER TO L.201 FOR MATERIALS GENERAL AND SPECIFIC NOTES

Carolyn Cooney & Associates
Landscape Architecture / Planning
13 Elm Street, Milford, MA 01757
Telephone 508 478 8426, Facsimile 508 478 8607

No.	Description	Date

REVISIONS

North

Project:

CITY OF WALTHAM
ELSIE TURNER FIELD
421 TRAPELO ROAD
WALTHAM, MA 02452

Prepared For:

CITY OF WALTHAM
DEPARTMENT OF RECREATION
510 MOODY STREET
WALTHAM, MA 02453

TITLE:

MATERIALS PLAN

Scale 1"=20' Date OCT. 31, 2017
Drawn By CCC
Checked By DRB
Approved By CCC
Project No. 1710.00

DWG No. L.202

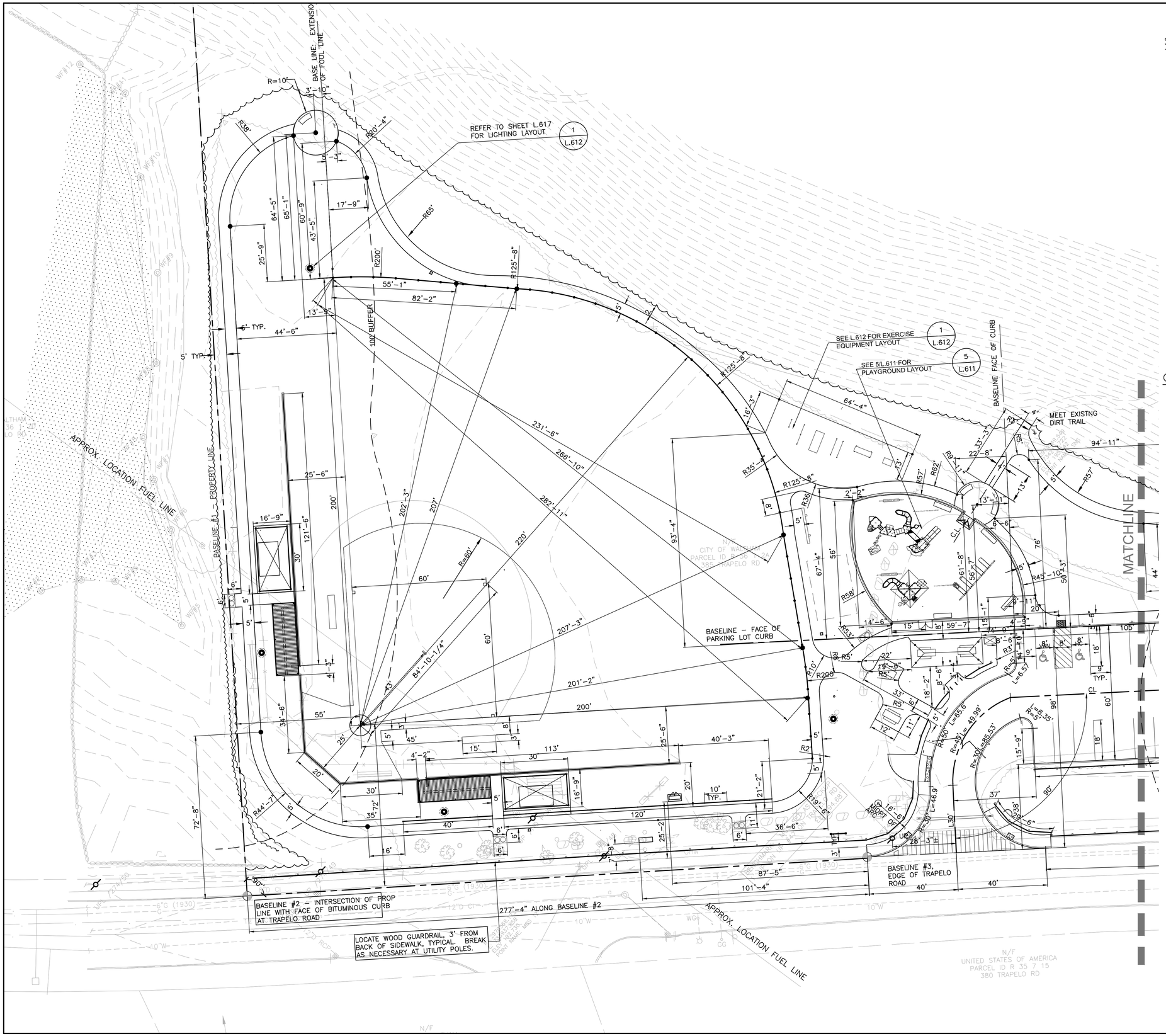

SPECIAL NOTES:

1. THE LAYOUT OF MAJOR PATHS, WALLS, CURBING, PARKING LOT, DRIVES AND BALL FIELD SHALL BE DONE BY A REGISTERED SURVEYOR.
2. LAYOUT OF SOFTBALL FIELD IS FROM B PROPERTY LINE AND PERPENDICULAR LINE AT INTERSECTION OF PL WITH FACE OF EX. BITUMINOUS CURB ON TRAPELO ROAD.
3. LAYOUT OF UPPER REST AREA AND PATHS IS FROM FROM EXTENSION OF FOUL LINE.
4. LAYOUT OF PARKING LOT ENTRANCE BEGINS 277'-4" ALONG BASELINE #2.
5. LAYOUT OF PLAYGROUND AREA IS FROM BASELINE THAT IS AN EXTENSION OF LINE ALONG FACE OF PARKING LOT CURB.

GENERAL NOTES:

1. LAYOUT LINES, OFFSET, OR REFERENCES TO LOCATING OBJECTS AR EITHER PARALLEL, PERPENDICULAR OR RADIAL UNLESS OTHERWISE DESIGNATED.
2. SITE FEATURES SHALL BE LAID OUT AND STAKED FOR REVIEW AND APPROVAL BY THE OWNER'S REPRESENTATIVE. ANY REQUIRED ADJUSTMENTS TO LAYOUT SHALL BE UNDERTAKEN AS DIRECTED AT NO ADDITIONAL COST TO THE OWNER.
3. PLAY EQUIPMENT SHALL BE LAID OUT PRIOR TO PROCEEDING WITH ANY PORTION OF THE INSTALLATION. PRIOR TO INSTALLATION THE LAYOUT SHALL BE REVIEWED BY A CPSI (CERTIFIED PLAYGROUND SAFETY INSPECTOR) TO ENSURE COMPLIANCE WITH THE RELEVANT CODES.

Carolyn Cooney & Associates
Landscape Architecture / Planning
13 Elm Street, Milford, MA 01757
Telephone 508 478 8426, Facsimile 508 478 8607

No.	Description	Date

REVISIONS

North

Project:

CITY OF WALTHAM
ELSIE TURNER FIELD
421 TRAPELO ROAD
WALTHAM, MA 02452

Prepared For:

CITY OF WALTHAM
DEPARTMENT OF RECREATION
510 MOODY STREET
WALTHAM, MA 02453

TITLE:

LAYOUT PLAN

Scale 1"=20' Date OCT. 31, 2017
Drawn By CCC
Checked By DRB
Approved By CCC
Project No. 1710.00

DWG No. L.301

REFER TO L.301 FOR
LAYOUT NOTES

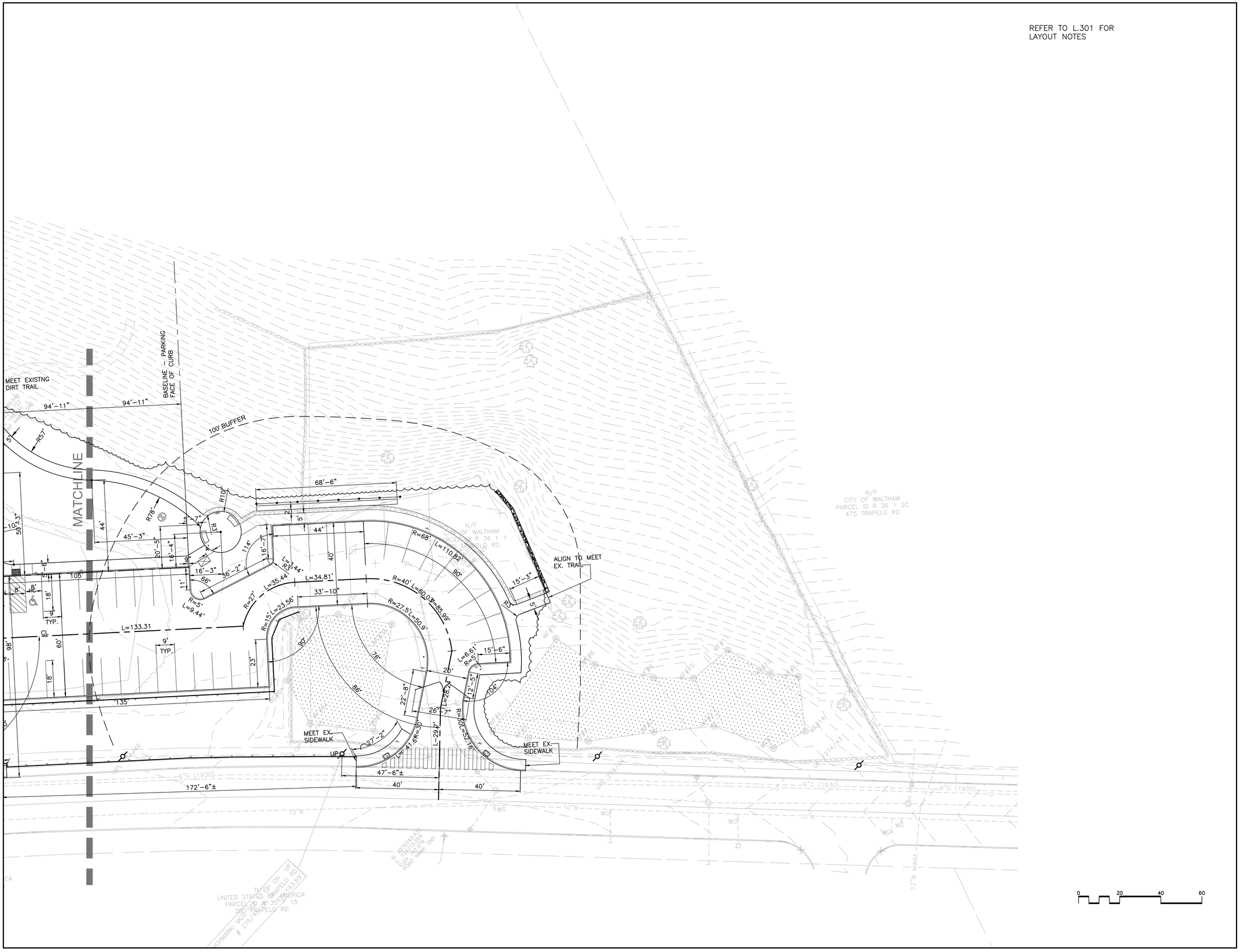

Carolyn Cooney & Associates

Landscape Architecture / Planning

13 Elm Street, Milford, MA 01757
Telephone 508 478 8426, Facsimile 508 478 8607

No.	Description	Date

REVISIONS

North

Project:

CITY OF WALTHAM
ELSIE TURNER FIELD
421 TRAPELO ROAD
WALTHAM, MA 02452

Prepared For:

CITY OF WALTHAM
DEPARTMENT OF RECREATION
510 MOODY STREET
WALTHAM, MA 02453

TITLE:

LAYOUT PLAN

Scale 1"=20' Date OCT. 31, 2017
Drawn By CCC
Checked By DRB
Approved By CCC
Project No. 1710.00

DWG No. L.302

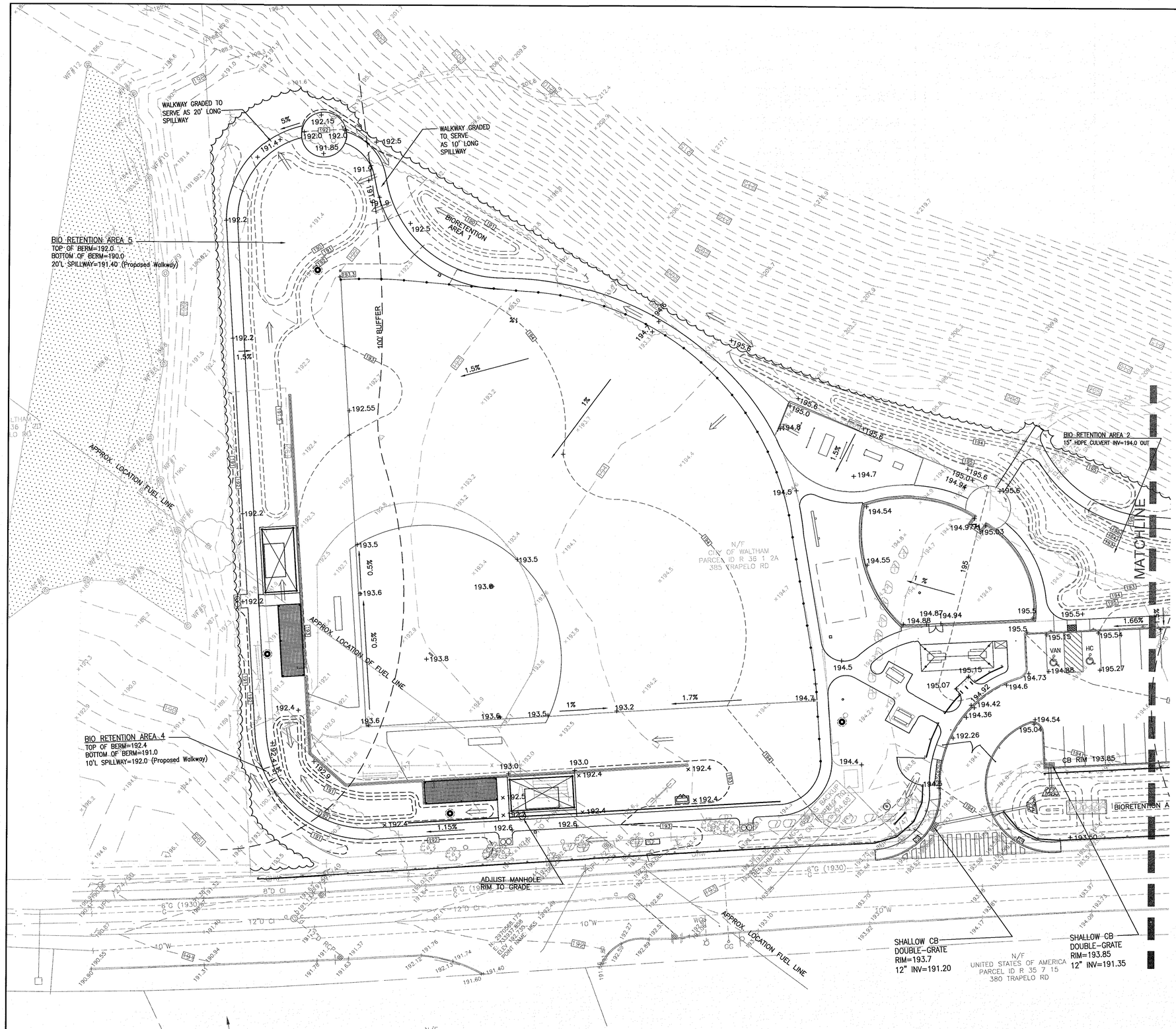

GRADING NOTES

GENERAL NOTES:

1. BIDDERS ARE REQUIRED TO INSPECT THE CONSTRUCTION SITE TO VERIFY EXISTING CONDITIONS AND WILL BE HELD RESPONSIBLE FOR THE FULL EXTENT OF WORK REQUIRED.
2. THE CONTRACTOR SHALL REPORT DEVIATIONS IN THE EXISTING CONDITIONS TO THE LANDSCAPE ARCHITECT (508) 478-8426, PRIOR TO STARTING WORK.
3. LOCATION AND DEPTH OF UTILITIES ARE APPROXIMATE. NO GUARANTEE IS EXPRESSED OR IMPLIED THAT THE DRAWINGS INDICATE ALL UTILITIES WHICH MAY EXIST. PRIOR TO ANY EXCAVATION, CONTACT "DIG SAFE" (811) A MINIMUM OF 72 HOURS PRIOR TO BEGINNING GRADING OPERATIONS TO MARK LOCATION OF RECORDED UTILITIES. NOTIFY ALL CORPORATIONS, COMPANIES, INDIVIDUALS OR LOCAL AUTHORITIES OWNING OR HAVING JURISDICTION OVER UTILITIES RUNNING TO, THROUGH OR ACROSS AREAS DISTURBED BY EXCAVATION.
4. THE CONTRACTOR SHALL PROTECT ALL ABUTTING PROPERTIES AND EXISTING SITE ELEMENTS TO REMAIN. ANY DAMAGE INCURRED SHALL BE REPAIRED BY THE CONTRACTOR AT NO ADDITIONAL COST TO THE CITY OF WALTHAM.
5. PROVIDE GRADE STAKES SHOWING DEPTH OF VARIOUS MATERIALS AND LIMIT OF GRADING FOR REVIEW BY THE LANDSCAPE ARCHITECT IN THE FIELD BEFORE FINAL GRADING OPERATIONS.
6. GRADING IS TO BE SMOOTH AND CONTINUOUS.
7. CROSS-SLOPES OF PAVEMENT SHALL NOT EXCEED 2%, AND LONGITUDINAL SLOPES SHALL NOT EXCEED 5%. VERIFY CONFORMANCE WITH ADA AND MAAB STANDARDS AND WHERE DISCREPANCIES ARE FOUND TO EXIST, NOTIFY THE LANDSCAPE ARCHITECT PRIOR TO PROCEEDING. THERE ARE NO CONSTRUCTION TOLERANCES ALLOWED BY ADA OR MAAB STANDARDS.

SPECIAL NOTES:

1. LASER GRADING EQUIPMENT SHALL BE USED TO ACHIEVE FINAL GRADING OF THE SOFTBALL FIELD. REFER TO SECTION 02200 – EARTHWORK.
2. REFER TO C.1 FOR DRAINAGE DETAILS.
3. AN EXXON PETROLEUM PIPELINE (1-800-537-5000) UNDERLIES SOME OF THE PROPOSED IMPROVEMENTS. THE PIPELINE SHALL BE MARKED ON-SITE BY DIG-SAFE. SHOULD THERE BE CONFLICTS WITH THE PROPOSED IMPROVEMENTS, NOTIFY THE LANDSCAPE ARCHITECT PRIOR TO PROCEEDING WITH EXCAVATION.
4. A SYNESYS FIBER OPTIC CABLE (1-800-286-6644) IS LOCATED ON-SITE AND SHALL BE MARKED IN THE FIELD BY DIG-SAFE. SHOULD THERE BE CONFLICTS WITH THE PROPOSED IMPROVEMENTS, NOTIFY THE LANDSCAPE ARCHITECT PRIOR TO PROCEEDING WITH EXCAVATION.
5. THE CONTRACTOR SHALL INCLUDE IN HIS/HER BID THE COSTS FOR REMOVAL & DISPOSAL OF ALL ROCKS SITTING ON THE SURFACE WHOSE REMOVAL IS NECESSARY TO CONSTRUCTION OF PROPOSED IMPROVEMENTS, REGARDLESS OF INDIVIDUAL ROCK CUBIC YARDAGE. REMOVAL & DISPOSAL OF PARTIALLY BURIED OR COMPLETELY BURIED SUBSURFACE ROCKS OR BOULDERS WILL BE PAID FOR AS DESCRIBED IN SECTION 02200 – EARTHWORK.
6. THE WORK OF THIS CONTRACT IS SUBJECT TO AN ORDER OF CONDITIONS ISSUED BY THE WALTHAM CONSERVATION COMMISSION. SEE SPEC SECTION 01571 AND APPENDIX A, ORDER OF CONDITIONS.

Carolyn Cooney & Associates
Landscape Architecture / Planning
13 Elm Street, Milford, MA 01757
Telephone 508 478 8426, Facsimile 508 478 8607

COMMONWEALTH OF MASSACHUSETTS
PETER M. BLAISDELL, JR.
CIVIL
No. 41613
REGISTERED PROFESSIONAL ENGINEER
P.E.
(10/27/17)
DRAINAGE DESIGN ONLY

COMMONWEALTH OF MASSACHUSETTS
CAROLYN DORR COONEY
No. 122
REGISTERED LANDSCAPE ARCHITECT
10-23-17

No.	Description	Date

REVISIONS

North

Project:

CITY OF WALTHAM
ELSIE TURNER FIELD
421 TRAPELO ROAD
WALTHAM, MA 02452

Prepared For:

CITY OF WALTHAM
DEPARTMENT OF RECREATION
510 MOODY STREET
WALTHAM, MA 02453

TITLE:

GRADING & DRAINAGE PLAN

Scale	1"=20'	Date	OCT. 23, 2017
Drawn By	CCC		
Checked By	DRB		
Approved By	CCC		
Project No.	1710.00		

DWG No. L.401

GRADING AND DRAINAGE NOTES

REFER TO SHEET L.401

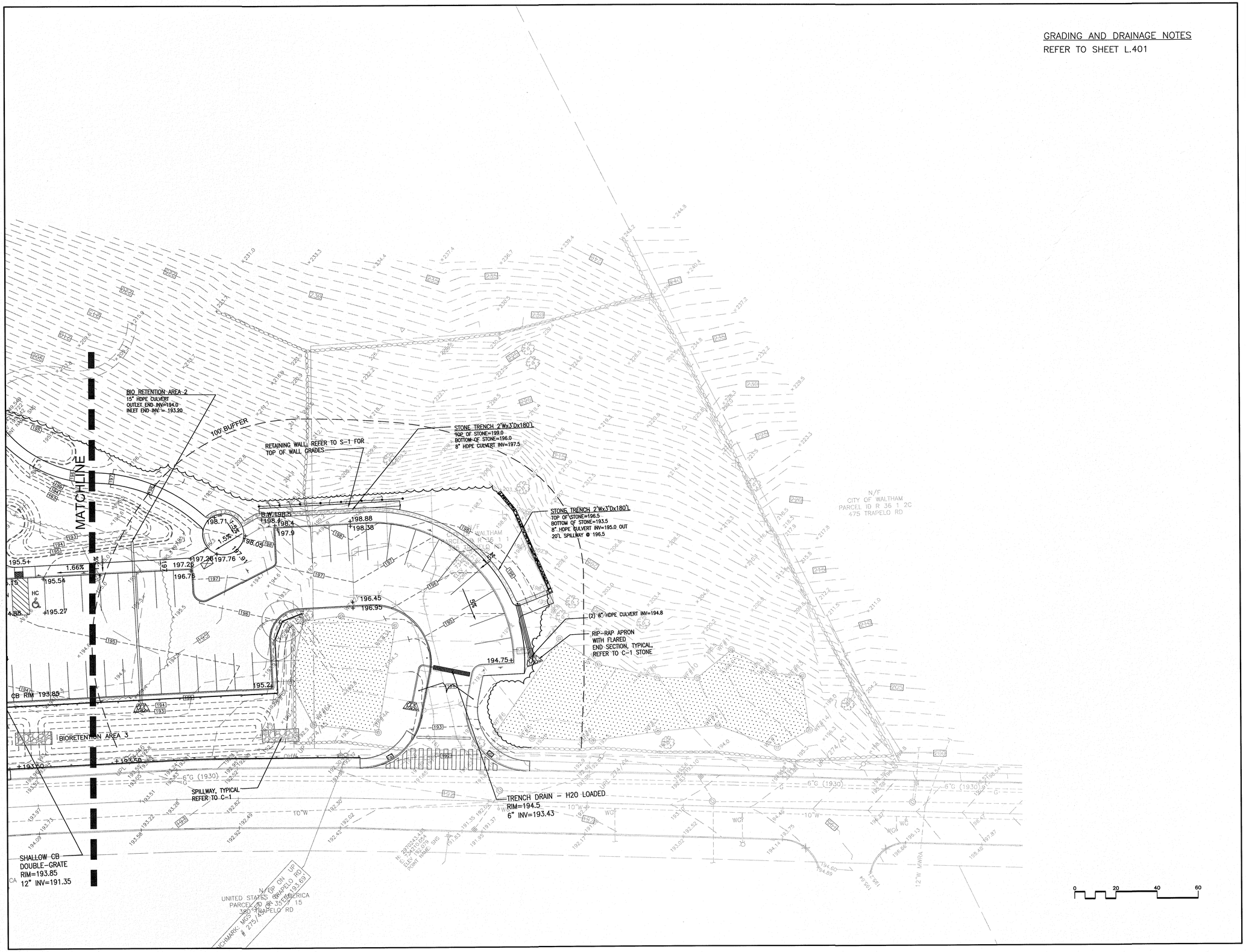

Carolyn Cooney & Associates

Landscape Architecture / Planning

13 Elm Street, Milford, MA 01757
Telephone 508 478 8426, Facsimile 508 478 8607

COMMONWEALTH OF MASSACHUSETTS
PETER M. BLAISDELL, JR.
CIVIL
No. 41613
REGISTERED PROFESSIONAL ENGINEER

(10/31/17)

DRAINAGE DESIGN ONLY

No.	Description	Date

REVISIONS

North

Project:

CITY OF WALTHAM
ELSIE TURNER FIELD
421 TRAPELO ROAD
WALTHAM, MA 02452

Prepared For:

CITY OF WALTHAM
DEPARTMENT OF RECREATION
510 MOODY STREET
WALTHAM, MA 02453

TITLE:

GRADING & DRAINAGE PLAN

Scale	1"=20'	Date	OCT. 31, 2017
Drawn By	CCC		
Checked By	DRB		
Approved By	CCC		
Project No.	1710.00		

DWG No. L.402

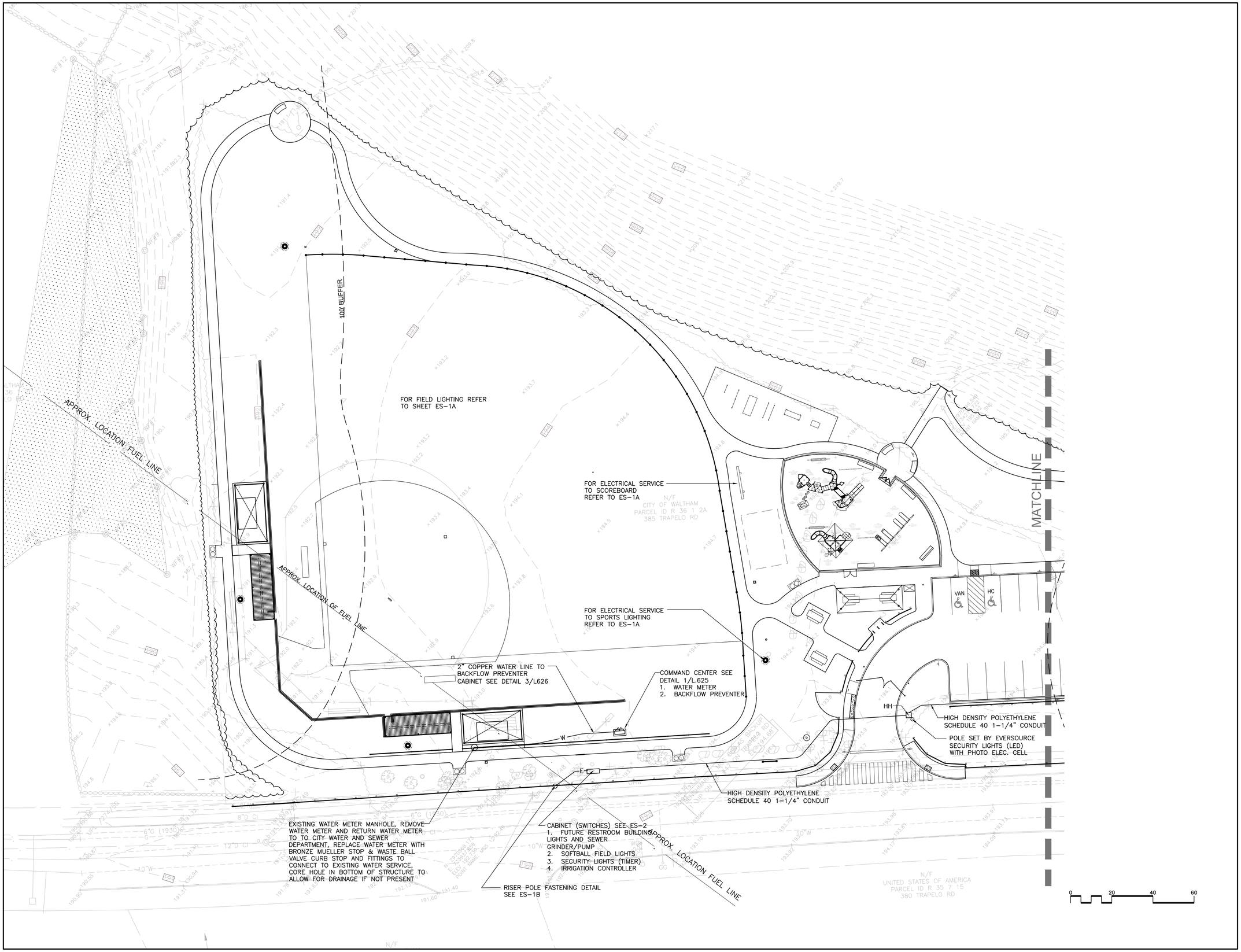

Carolyn Cooney & Associates

Landscape Architecture / Planning

13 Elm Street, Milford, MA 01757
Telephone 508 478 8426, Facsimile 508 478 8607

No.	Description	Date

REVISIONS

North

Project:

CITY OF WALTHAM
ELSIE TURNER FIELD
421 TRAPELO ROAD
WALTHAM, MA 02452

Prepared For:

CITY OF WALTHAM
DEPARTMENT OF RECREATION
510 MOODY STREET
WALTHAM, MA 02453

TITLE:

UTILITY COORDINATION PLAN

Scale	1"=20'	Date	OCT. 31, 2017
Drawn By	CCC		
Checked By	DRB		
Approved By	CCC		
Project No.	1710.00		

DWG No. L.451

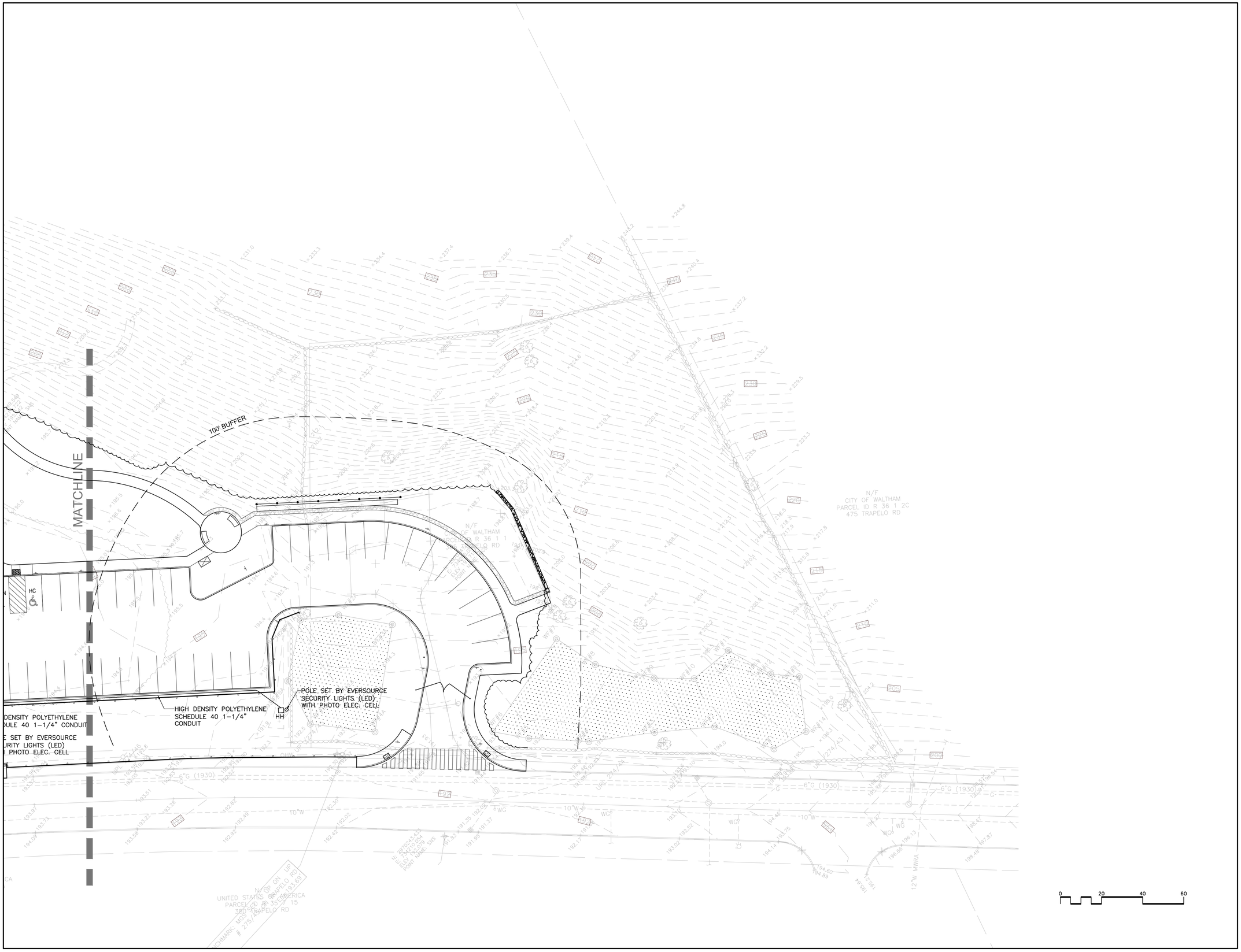

Carolyn Cooney & Associates

Landscape Architecture / Planning

13 Elm Street, Milford, MA 01757
Telephone 508 478 8426, Facsimile 508 478 8607

No.	Description	Date

REVISIONS

North

Project:

CITY OF WALTHAM
ELSIE TURNER FIELD
421 TRAPELO ROAD
WALTHAM, MA 02452

Prepared For:

CITY OF WALTHAM
DEPARTMENT OF RECREATION
510 MOODY STREET
WALTHAM, MA 02453

TITLE:

UTILITY COORDINATION PLAN

Scale	1"=20'	Date	OCT. 31, 2017
Drawn By	CCC		
Checked By	DRB		
Approved By	CCC		
Project No.	1710.00		

DWG No. L.452

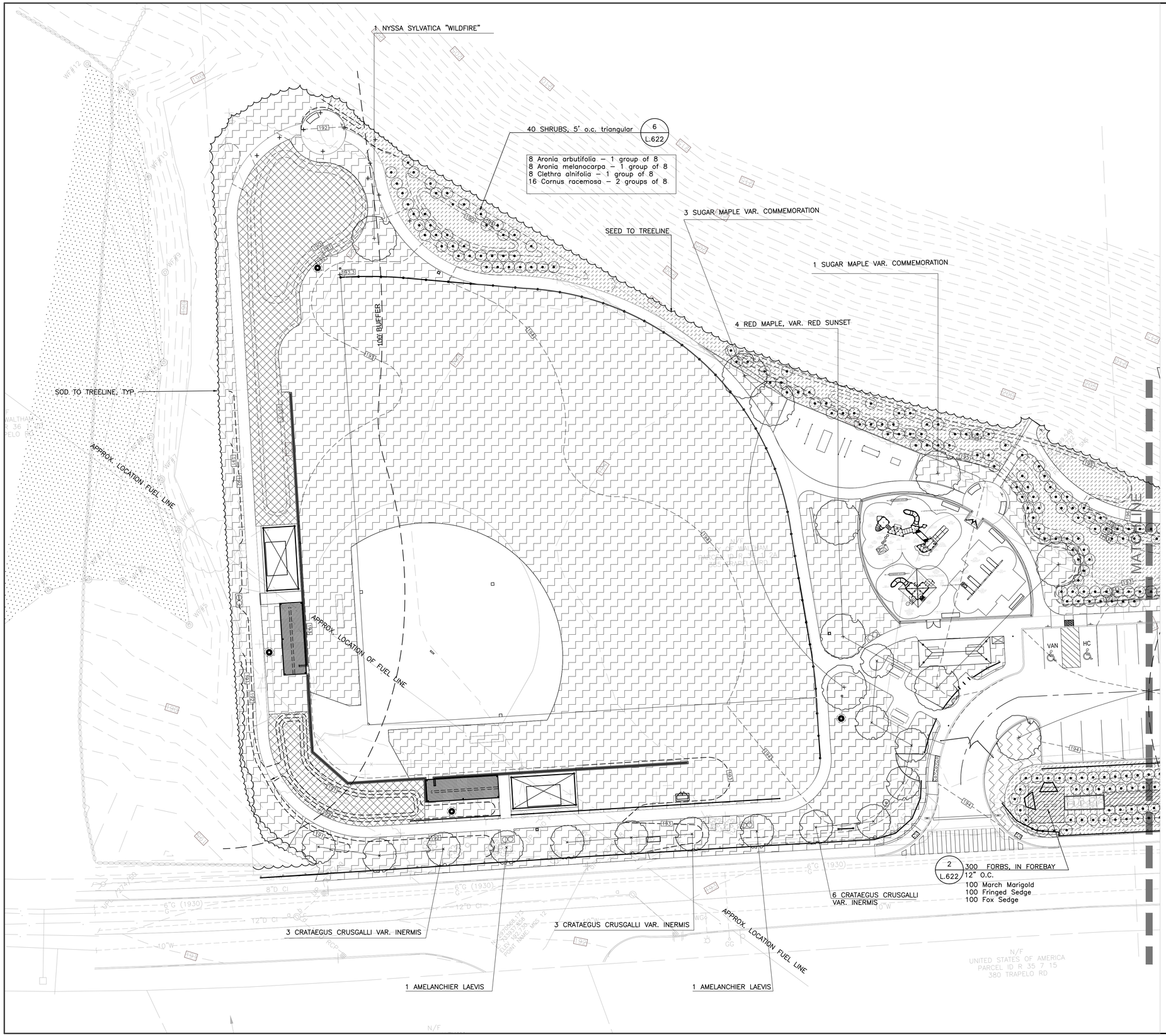

LEGEND

- SOD
- BIORETENTION BASIN MIX #1 - MOWABLE
- BIORETENTION BASIN MIX- #2 - NO MOW

PLANTING NOTES:

1. PROVIDE 6" OF COMPACTED LOAM IN LAWN, GRASS, PLANTING AND BIORETENTION AREAS.
2. SEED OR SODDING SHALL BE TO THE LIMIT OF PROPOSED TREELINE.
3. HYDROSEED BIORETENTION AREA SIDE–SLOPES AND BOTTOMS INCLUDING AREAS SCHEDULED FOR SHRUB AND FORB PLANTING.
4. PROVIDE SOIL AMENDMENTS AS RECOMMENDED BY THE SOILS TESTING AGENCY. DO NOT PROVIDE PHOSPHATE FERTILIZER UNLESS RECOMMENDED BY THE SOILS TESTING AGENCY, AND USE ONLY AT RECOMMENDED RATES FOR PLANT ESTABLISHMENT.
5. APPLY FERTILIZER WITH A DROP–TYPE SPREADER. USE OF BROADCAST SPREADERS OR HAND SPREADING IS NOT ACCEPTABLE. IMMEDIATELY CLEAN UP ANY AREA WHERE FERTILIZER HAS BEEN ACCIDENTALLY DROPPED ONTO PAVEMENT.
6. DO NOT APPLY FERTILIZER OUTSIDE THE GROWING SEASON DEFINED AS APRIL 15TH TO OCTOBER 31ST.
7. NO NITROGEN OR PHOSPHATE SHALL BE APPLIED DURING RAINFALL OR BEFORE PREDICTION OF RAIN.
8. SUBSTITUTIONS FOR SPECIES/SIZES WILL NOT BE APPROVED IF THE PLANT MATERIAL IS AVAILABLE FROM A COMMERCIAL NURSERY WITHIN A 50 MILE RADIUS OF THE SITE. THE CONTRACTOR IS OBLIGATED TO PURCHASE MATERIAL FROM MORE THAN ONE VENDOR, IF NECESSARY TO OBTAIN THE SPECIFIED SPECIES AND SIZES.
9. THE CONTRACTOR SHALL SUPPLY FRESHLY DUG MATERIAL IF AVAILABLE.
10. IF PLANTING OCCURS IN THE FALL, THE LANDSCAPE ARCHITECT SHALL HAVE THE OPTION OF SUBSTITUTING FOR FALL HAZARD SPECIES IN LIEU OF ACCEPTING ABOVE GROUND SPRING DUG MATERIAL.
11. ALL PLANT MATERIAL MUST BE APPROVED BY THE LANDSCAPE ARCHITECT AT THE NURSERY PRIOR TO SHIPMENT TO THE SITE.
12. NOTIFY THE LANDSCAPE ARCHITECT AT LEAST 2 WEEKS BEFORE NURSERY TAGGING IS SCHEDULED.

Carolyn Cooney & Associates
Landscape Architecture / Planning
13 Elm Street, Milford, MA 01757
Telephone 508 478 8426, Facsimile 508 478 8607

No.	Description	Date

REVISIONS

North

Project:

CITY OF WALTHAM
ELSIE TURNER FIELD
421 TRAPELO ROAD
WALTHAM, MA 02452

Prepared For:

CITY OF WALTHAM
DEPARTMENT OF RECREATION
510 MOODY STREET
WALTHAM, MA 02453

TITLE:

PLANTING PLAN

Scale	1"=20'	Date	OCT. 31, 2017
Drawn By	CCC		
Checked By	DRB		
Approved By	CCC		
Project No.	1710.00		

DWG No. L.501

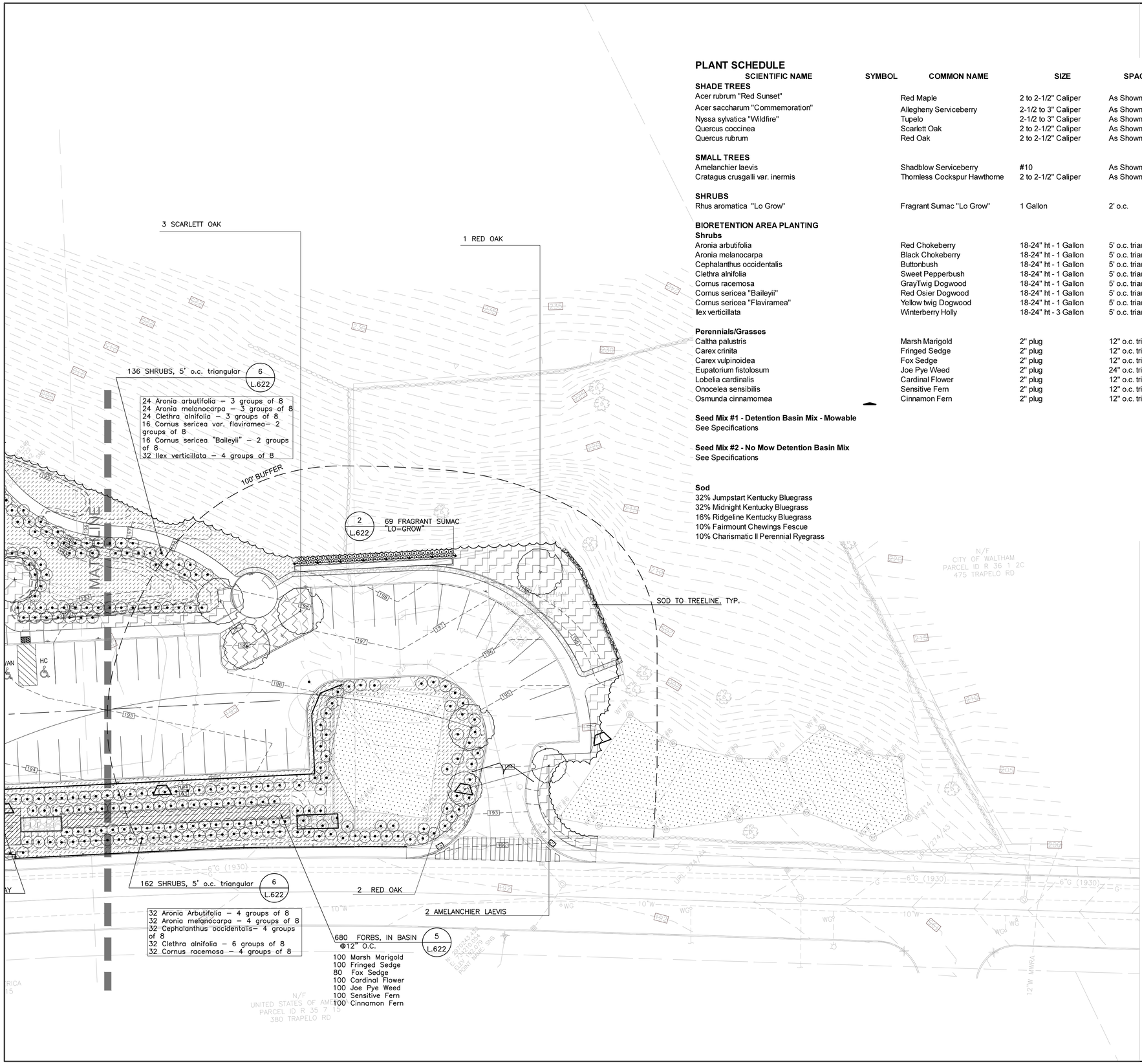

PLANT SCHEDULE

SCIENTIFIC NAME	SYMBOL	COMMON NAME	SIZE	SPACING	QUANTITY	COMMENTS
SHADE TREES						
Acer rubrum "Red Sunset"		Red Maple	2 to 2-1/2" Caliper	As Shown	4	Amended loam backfill
Acer saccharum "Commemoration"		Allegheny Serviceberry	2-1/2 to 3" Caliper	As Shown	4	Amended loam backfill
Nyssa sylvatica "Wildfire"		Tupelo	2-1/2 to 3" Caliper	As Shown	1	Amended loam backfill
Quercus coccinea		Scarlett Oak	2 to 2-1/2" Caliper	As Shown	3	Amended loam backfill
Quercus rubrum		Red Oak	2 to 2-1/2" Caliper	As Shown	3	Amended loam backfill
SMALL TREES						
Amelanchier laevis		Shadblow Serviceberry	#10	As Shown	4	Amended loam backfill
Cratagus crusgalli var. inermis		Thornless Cockspur Hawthorne	2 to 2-1/2" Caliper	As Shown	12	Amended loam backfill
SHRUBS						
Rhus aromatica "Lo Grow"		Fragrant Sumac "Lo Grow"	1 Gallon	2' o.c.	69	Mulched bed
BIORETENTION AREA PLANTING						
Shrubs						
Aronia arbutifolia		Red Chokeberry	18-24" ht - 1 Gallon	5' o.c. triangular	64	8 per group
Aronia melanocarpa		Black Chokeberry	18-24" ht - 1 Gallon	5' o.c. triangular	64	8 per group
Cephalanthus occidentalis		Buttonbush	18-24" ht - 1 Gallon	5' o.c. triangular	32	8 per group
Clethra alnifolia		Sweet Pepperbush	18-24" ht - 1 Gallon	5' o.c. triangular	64	8 per group
Cornus racemosa		GrayTwig Dogwood	18-24" ht - 1 Gallon	5' o.c. triangular	48	8 per group
Cornus sericea "Baileyii"		Red Osier Dogwood	18-24" ht - 1 Gallon	5' o.c. triangular	16	8 per group
Cornus sericea "Flaviramea"		Yellow twig Dogwood	18-24" ht - 1 Gallon	5' o.c. triangular	16	8 per group
Ilex verticillata		Winterberry Holly	18-24" ht - 3 Gallon	5' o.c. triangular	32	8 per group
Perennials/Grasses						
Caltha palustris		Marsh Marigold	2" plug	12" o.c. triangular	200	
Carex crinita		Fringed Sedge	2" plug	12" o.c. triangular	200	
Carex vulpinoidea		Fox Sedge	2" plug	12" o.c. triangular	180	
Eupatorium fistolosum		Joe Pye Weed	2" plug	24" o.c. triangular	100	
Lobelia cardinalis		Cardinal Flower	2" plug	12" o.c. triangular	100	
Onocelea sensibilis		Sensitive Fern	2" plug	12" o.c. triangular	100	
Osmunda cinnamomea		Cinnamon Fern	2" plug	12" o.c. triangular	100	

Seed Mix #1 - Detention Basin Mix - Mowable
See Specifications

Seed Mix #2 - No Mow Detention Basin Mix
See Specifications

Sod
32% Jumpstart Kentucky Bluegrass
32% Midnight Kentucky Bluegrass
16% Ridgeline Kentucky Bluegrass
10% Fairmount Chewings Fescue
10% Charismatic II Perennial Ryegrass

Carolyn Cooney & Associates
Landscape Architecture / Planning
13 Elm Street, Milford, MA 01757
Telephone 508 478 8426, Facsimile 508 478 8607

No.	Description	Date

REVISIONS

North

Project:

CITY OF WALTHAM
ELSIE TURNER FIELD
421 TRAPELO ROAD
WALTHAM, MA 02452

Prepared For:

CITY OF WALTHAM
DEPARTMENT OF RECREATION
510 MOODY STREET
WALTHAM, MA 02453

TITLE:

PLANTING PLAN

Scale	1"=20'	Date	OCT. 31, 2017
Drawn By	CCC		
Checked By	DRB		
Approved By	CCC		
Project No.	1710.00		

DWG No. L.502

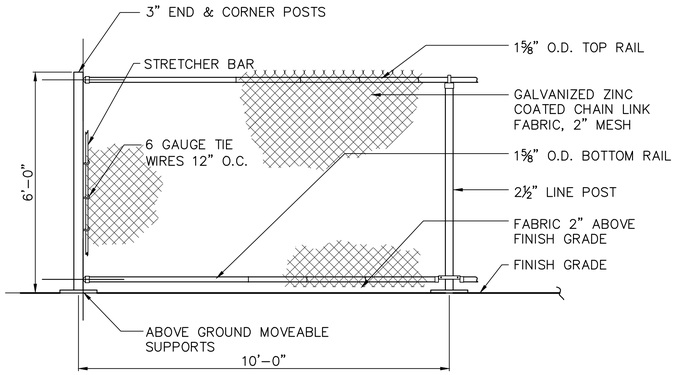

ELEVATION

1 TEMPORARY CONSTRUCTION FENCE
3" = 1'-0"

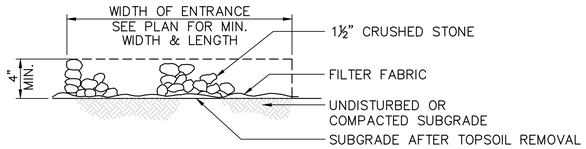

SECTION

2 TEMPORARY CONSTRUCTION ENTRANCE
N.T.S.

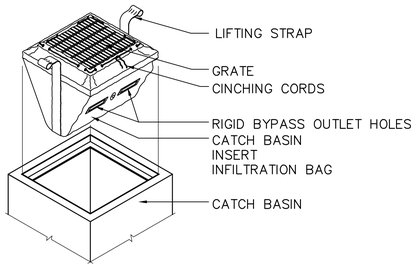

ISOMETRIC

3 CATCH BASIN INSERT
N.T.S.

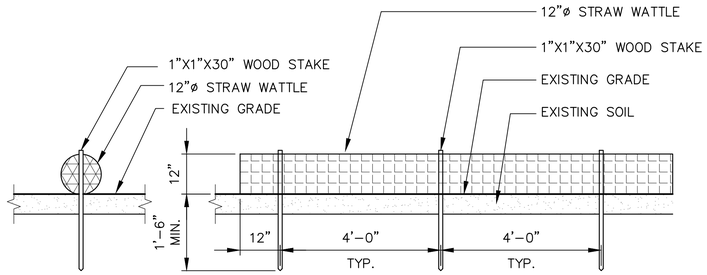

SECTION ELEVATION

4 STRAW WATTLE DETAIL
N.T.S.

Carolyn Cooney & Associates
Landscape Architecture / Planning
13 Elm Street, Milford, MA 01757
Telephone 508 478 8426, Facsimile 508 478 8607

No.	Description	Date

REVISIONS

Project:

CITY OF WALTHAM
ELSIE TURNER FIELD
421 TRAPELO ROAD
WALTHAM, MA 02452

Prepared For:

CITY OF WALTHAM
DEPARTMENT OF RECREATION
510 MOODY STREET
WALTHAM, MA 02453

TITLE:

SITE PREPARATION DETAILS

Scale AS NOTED Date OCT. 31, 2017
Drawn By CCC
Checked By DRB
Approved By VH
Project No. 1710.00

DWG No. L.601

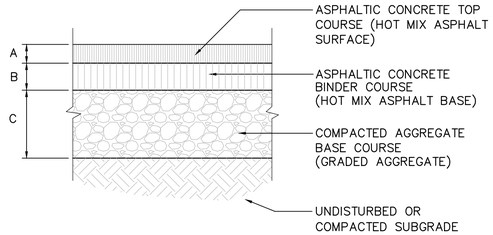

THICKNESS (INCHES)			
	DRIVES	PARKING LOT	WALKS/PATHS
A	1–1/2	1–1/2	1–1/2
B	2–1/2	2–1/2	1–1/2
C	12	12	9

SECTION

1 BITUMINOUS CONCRETE PAVEMENT
SCALE: 1" = 1'–0"

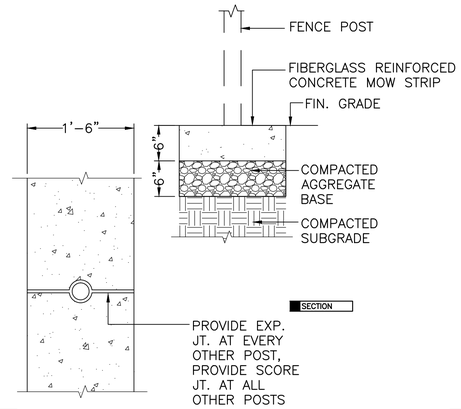

PLAN

2 CONCRETE MOW STRIP
SCALE: 1" = 1'–0"

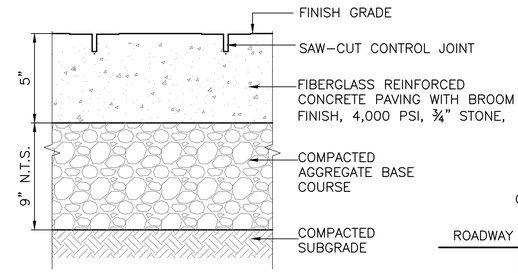

SECTION

3 CONCRETE PAVEMENT AND PADS
SCALE: 3" = 1'–0"

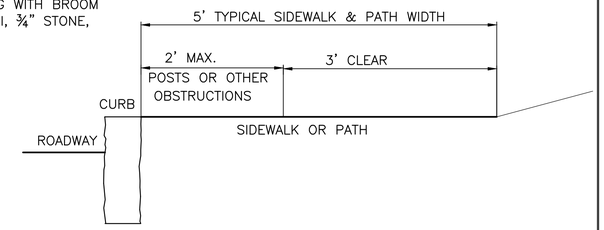

SECTION

4 SIDEWALK/WALKWAY SECTION
SCALE: 1" = 1'–0"

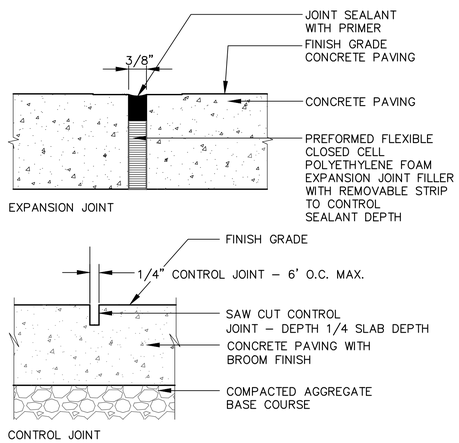

SECTION

5 CONCRETE PAVING JOINT DETAILS
SCALE: N.T.S.

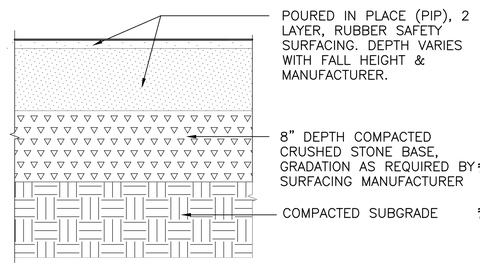

SECTION

6 TYPE 1 SAFETY SURFACING – 2 LAYER PIP
SCALE: 3" = 1'–0"

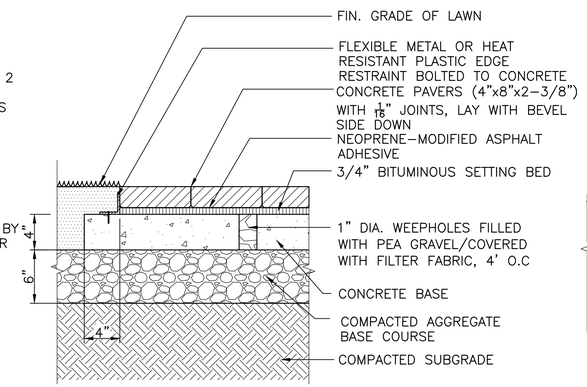

SECTION

8 SCALE: PRECAST PAVERS ON CONCRETE BASE
SCALE: 1–1/2" = 1'–0"

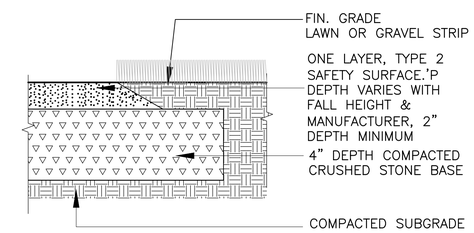

SECTION

9 TYPE 2 – ONE LAYER SAFETY SURFACING AT EXERCISE AREA
SCALE: NTS

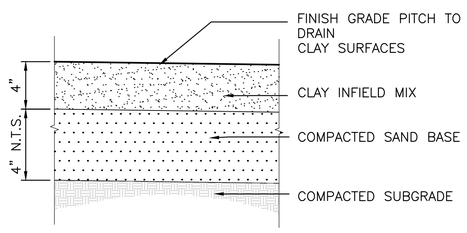

SECTION

10 SKINNED INFIELD SURFACCING
SCALE: NTS

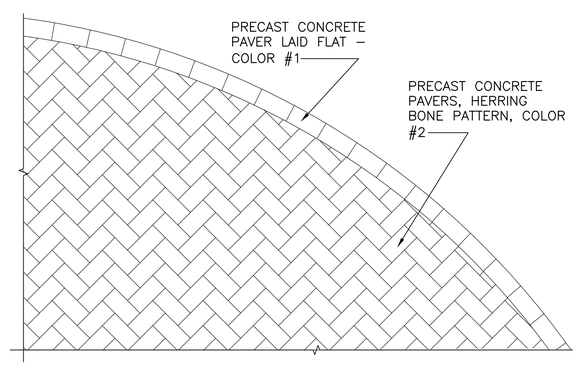

PLAN

11 PAVING PATTERN AT SITTING AREAS
SCALE: 3/4" = 1'–0"

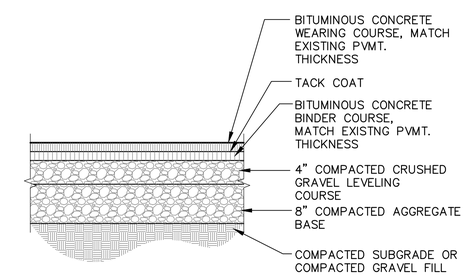

SECTION

12 STREET RESTORATION DETAIL
N.T.S.

Carolyn Cooney & Associates
Landscape Architecture / Planning
13 Elm Street, Milford, MA 01757
Telephone 508 478 8426, Facsimile 508 478 8607

No.	Description	Date

REVISIONS

Project:

CITY OF WALTHAM
ELSIE TURNER FIELD
421 TRAPELO ROAD
WALTHAM, MA 02452

Prepared For:

CITY OF WALTHAM
DEPARTMENT OF RECREATION
510 MOODY STREET
WALTHAM, MA 02453

TITLE:

PAVING DETAILS

Scale AS NOTED Date OCT. 31, 2017
Drawn By CCC
Checked By DRB
Approved By VH
Project No. 1710.00

DWG No. L.602

NOTE:
WHERE EXISTING PAVEMENT ABUTS, SAW CUT AND REMOVE 12" OF PVMT. FOR REMOVAL & INSTALLATION OF GRANITE CURB, PATCH PVMT. TO MATCH EXISTING.

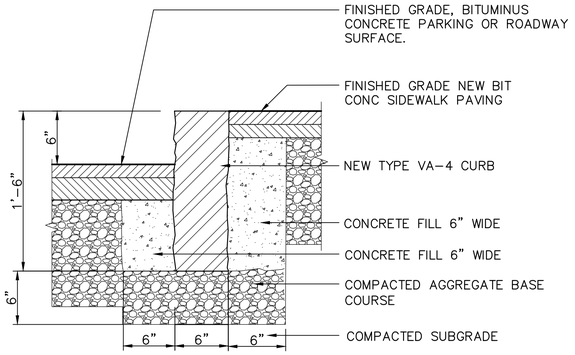

SECTION

1 GRANITE CURB
SCALE: NTS

NOTE: PROVIDE DOWELED EXPANSION JOINTS AT 30' O.C.

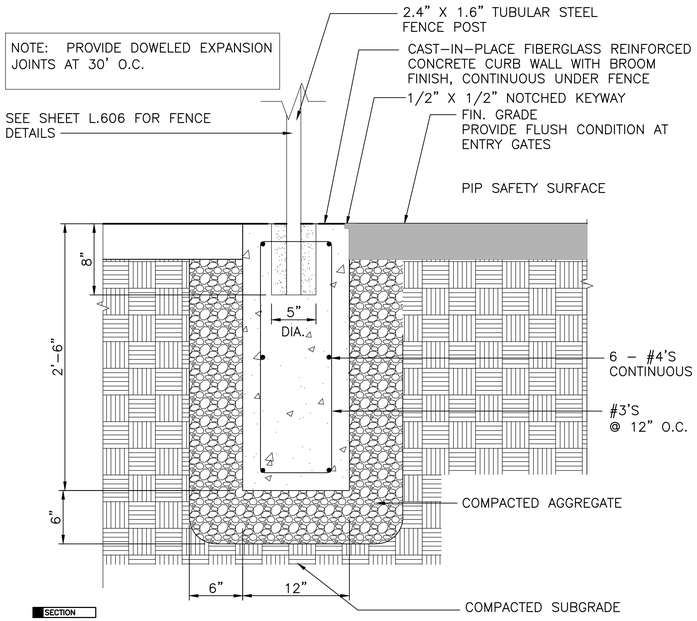

SECTION

2 CONCRETE CURB WALL WITH WELDED WIRE FENCE
1-1/2" = 1'-0"

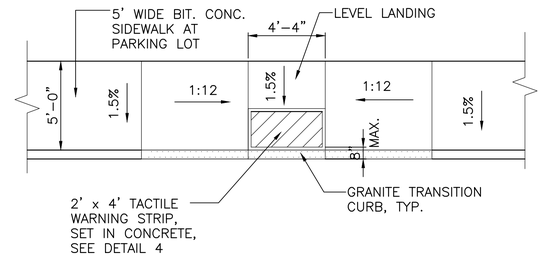

PLAN

3 STRAIGHT PARALLEL CURB CUT, TYPICAL AT PARKING LOT
1/4" = 1'-0"

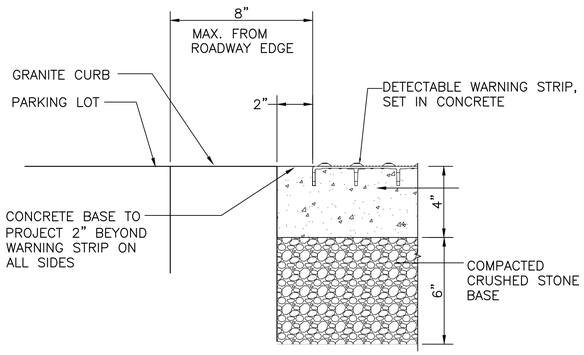

SECTION

4 DETECTABLE WARNING STRIP ATTACHMENT
SCALE: ONE-QUARTER SIZE

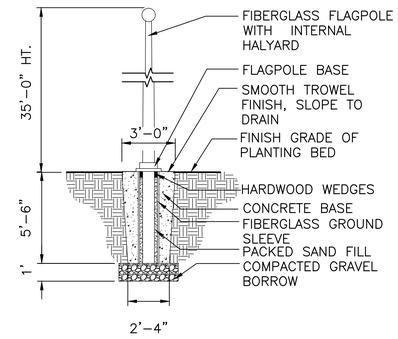

SECTION

6 FLAGPOLE DETAIL
1/4" = 1'-0"

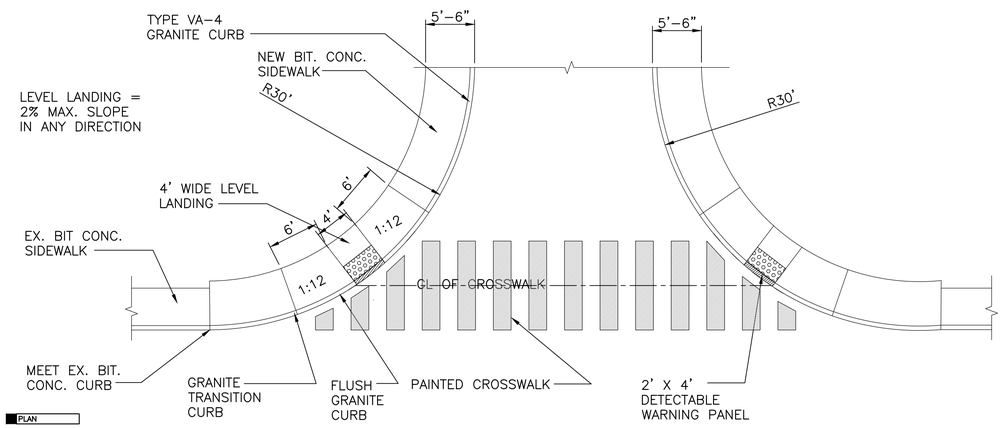

PLAN

5 CURVED PARALLEL CURB CUTS AT EXIT & ENTRANCE CORNERS
1/4" = 1'-0"

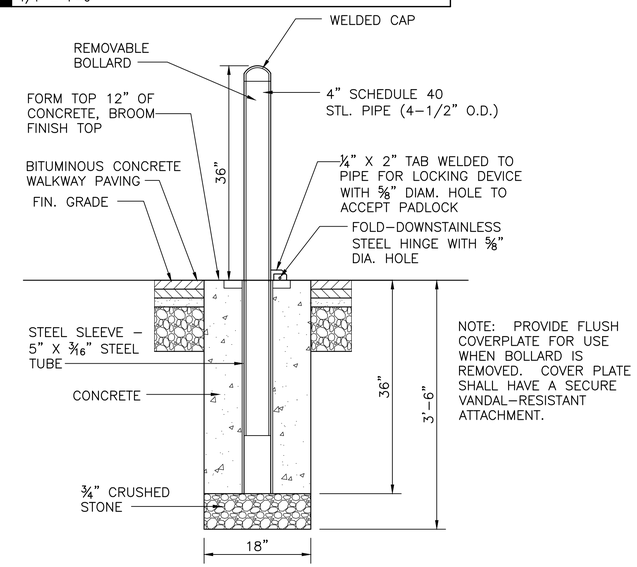

SECTION

7 REMOVABLE BOLLARD
1" = 1'-0"

Carolyn Cooney & Associates
Landscape Architecture / Planning
13 Elm Street, Milford, MA 01757
Telephone 508 478 8426, Facsimile 508 478 8607

No.	Description	Date

REVISIONS

Project:

CITY OF WALTHAM
ELSIE TURNER FIELD
421 TRAPELO ROAD
WALTHAM, MA 02452

Prepared For:

CITY OF WALTHAM
DEPARTMENT OF RECREATION
510 MOODY STREET
WALTHAM, MA 02453

TITLE:

PAVING, CURBING & FLAGPOLE DETAILS

Scale AS NOTED Date OCT. 31, 2017
Drawn By CCC
Checked By DRB
Approved By VH
Project No. 1710.00

DWG No. L.603

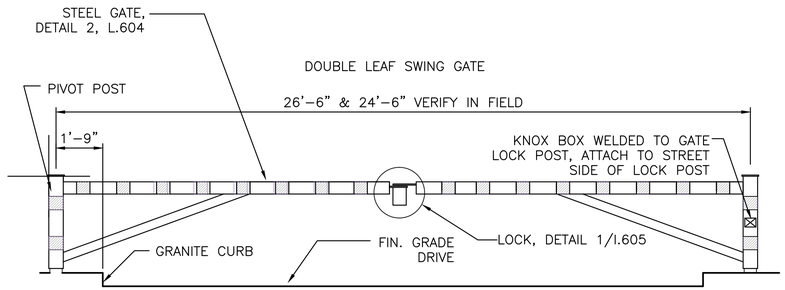

ELEVATION

1 DOUBLE STEEL GATE AT ENTRANCE/EXIT DRIVES
SCALE: 3/8" = 1'-0"

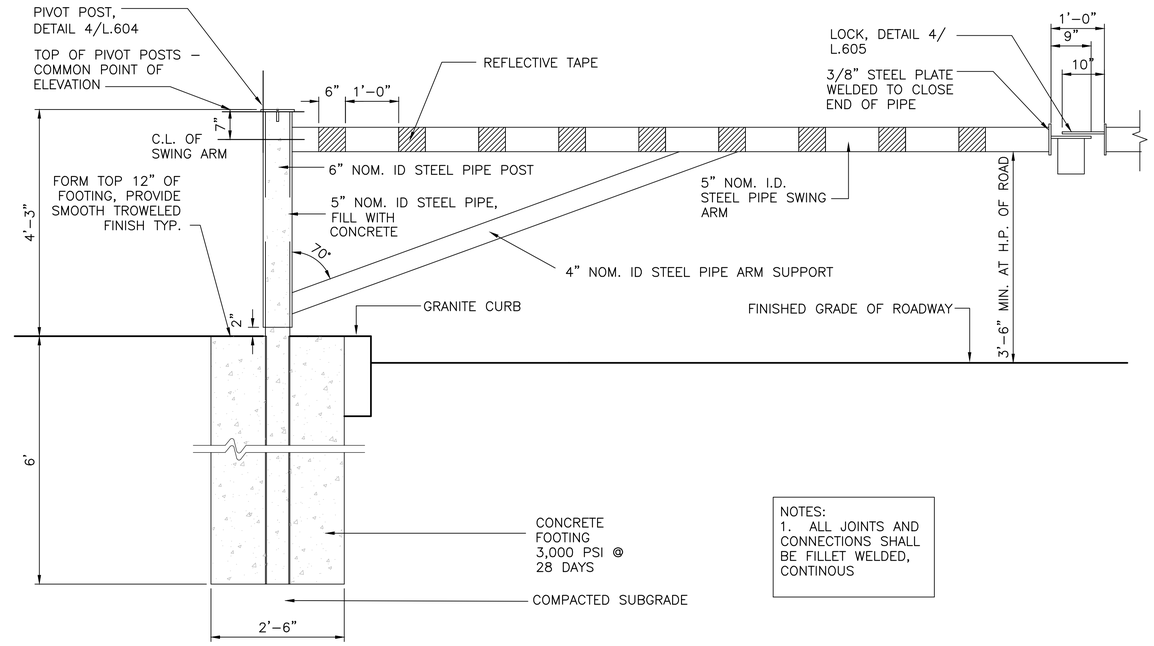

NOTES:
1. ALL JOINTS AND CONNECTIONS SHALL BE FILLET WELDED, CONTINOUS

SECTION

2 DOUBLE STEEL GATE AT ENTRANCE/EXIT DRIVES
SCALE: 3/4" = 1'-0"

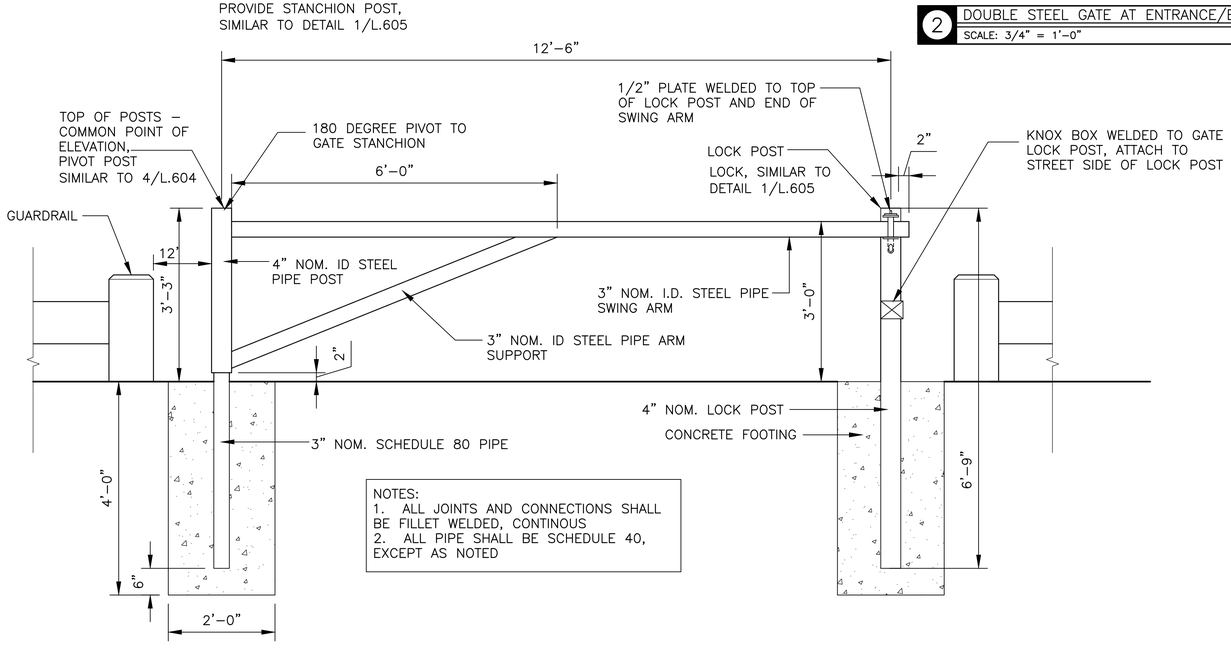

NOTES:
1. ALL JOINTS AND CONNECTIONS SHALL BE FILLET WELDED, CONTINOUS
2. ALL PIPE SHALL BE SCHEDULE 40, EXCEPT AS NOTED

SECTION

3 12' WIDE MAINTENANCE STEEL GATE
SCALE: 3/8" = 1'-0"

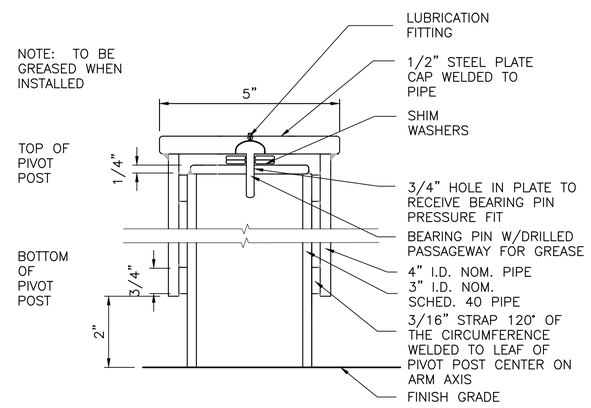

SECTION

4 PIVOT POST DETAIL
SCALE: ONE-HALF SIZE

Carolyn Cooney & Associates
Landscape Architecture / Planning
13 Elm Street, Milford, MA 01757
Telephone 508 478 8426, Facsimile 508 478 8607

No.	Description	Date

REVISIONS

Project:

CITY OF WALTHAM
ELSIE TURNER FIELD
421 TRAPELO ROAD
WALTHAM, MA 02452

Prepared For:

CITY OF WALTHAM
DEPARTMENT OF RECREATION
510 MOODY STREET
WALTHAM, MA 02453

TITLE:

STEEL GATE DETAILS

Scale AS NOTED Date OCT. 31, 2017
Drawn By CCC
Checked By DRB
Approved By VH
Project No. 1710.00

DWG No. L.604

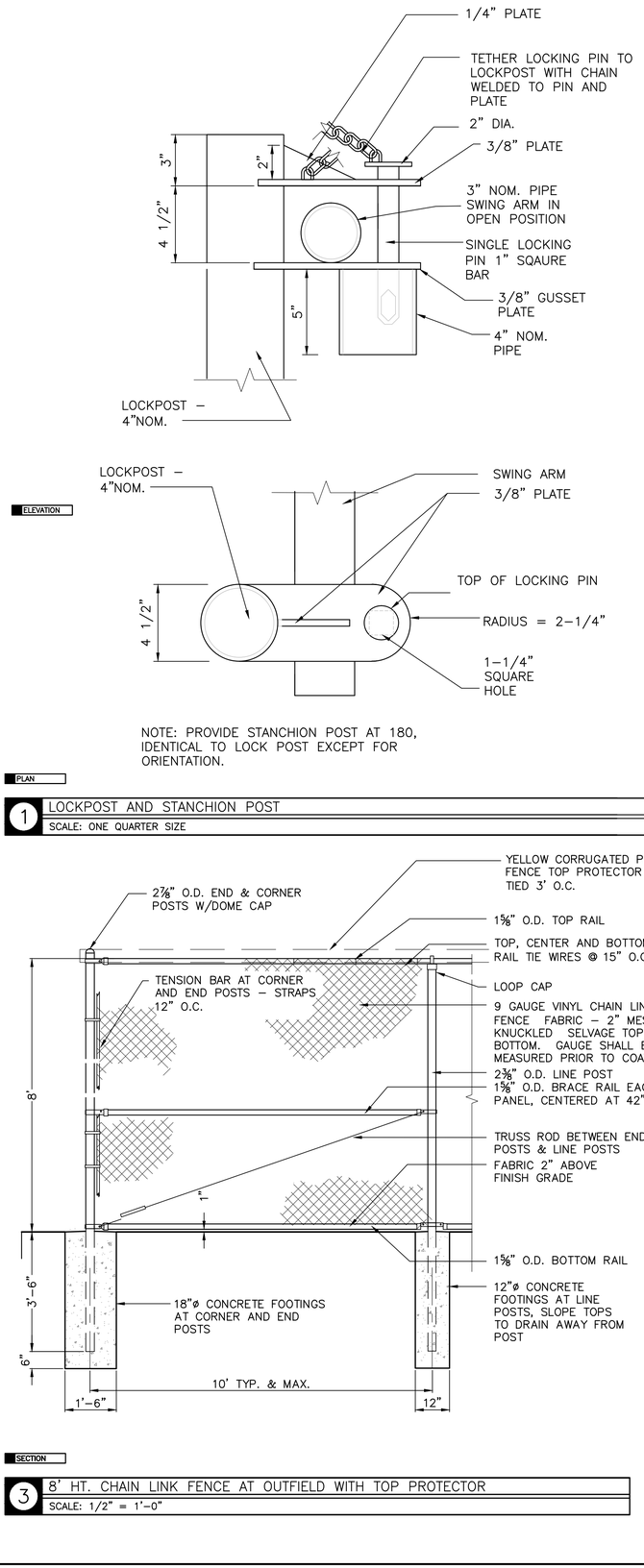

1 LOCKPOST AND STANCHION POST
SCALE: ONE QUARTER SIZE

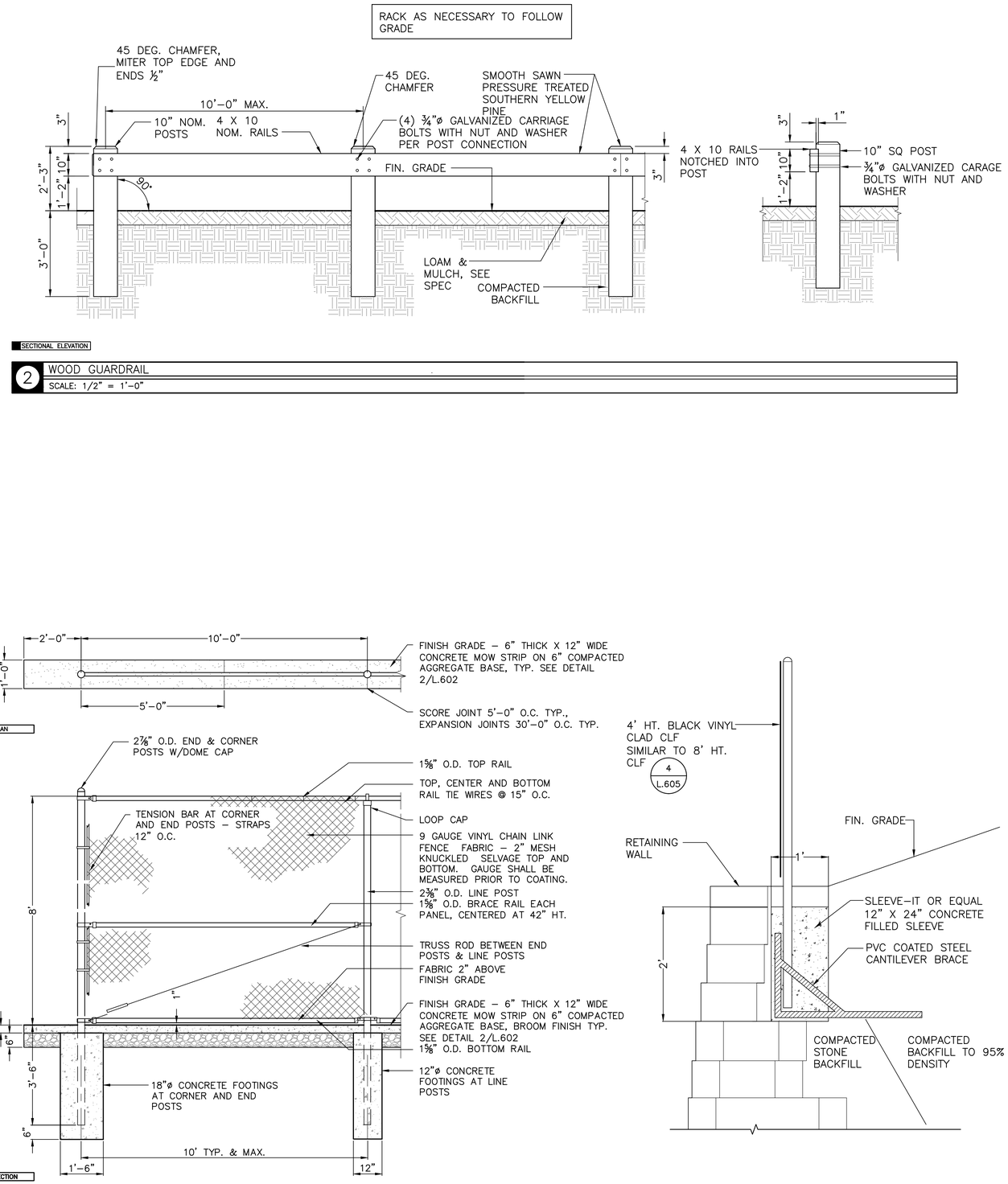

2 WOOD GUARDRAIL
SCALE: 1/2" = 1'–0"

3 8' HT. CHAIN LINK FENCE AT OUTFIELD WITH TOP PROTECTOR
SCALE: 1/2" = 1'–0"

4 8' HT. CHAIN LINK FENCE AT SOFTBALL FIELD WITH MOW STRIP
SCALE: 1/2" = 1'–0"

5 4' HT. CHAIN LINK FENCE ON WALL
SCALE: 1" = 1'–0"

Carolyn Cooney & Associates
Landscape Architecture / Planning
13 Elm Street, Milford, MA 01757
Telephone 508 478 8426, Facsimile 508 478 8607

No.	Description	Date

REVISIONS

Project:

CITY OF WALTHAM
ELSIE TURNER FIELD
421 TRAPELO ROAD
WALTHAM, MA 02452

Prepared For:

CITY OF WALTHAM
DEPARTMENT OF RECREATION
510 MOODY STREET
WALTHAM, MA 02453

TITLE:

FENCING DETAILS

Scale AS NOTED Date OCT. 31, 2017
Drawn By CCC
Checked By DRB
Approved By VH
Project No. 1710.00

DWG No. L.605

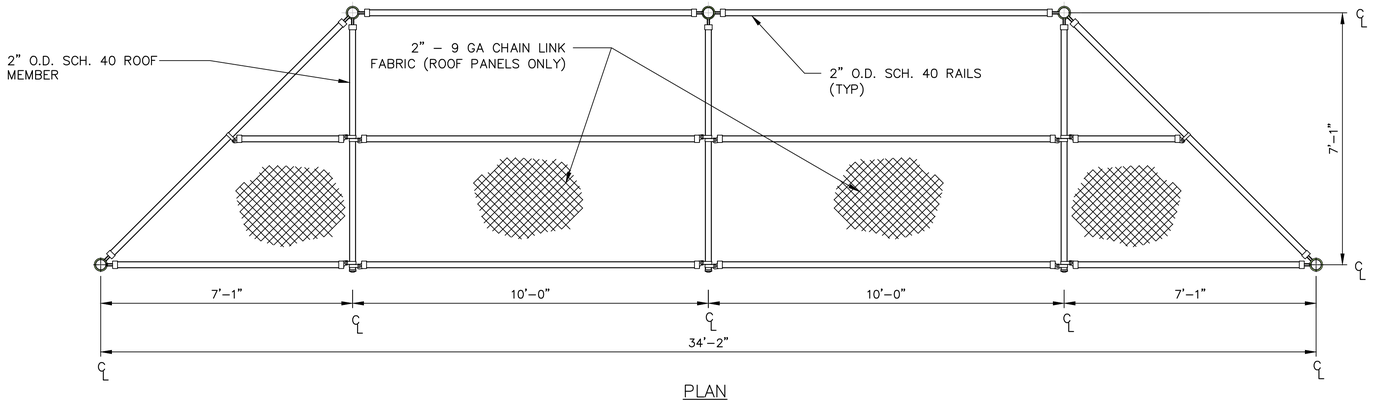

PLAN

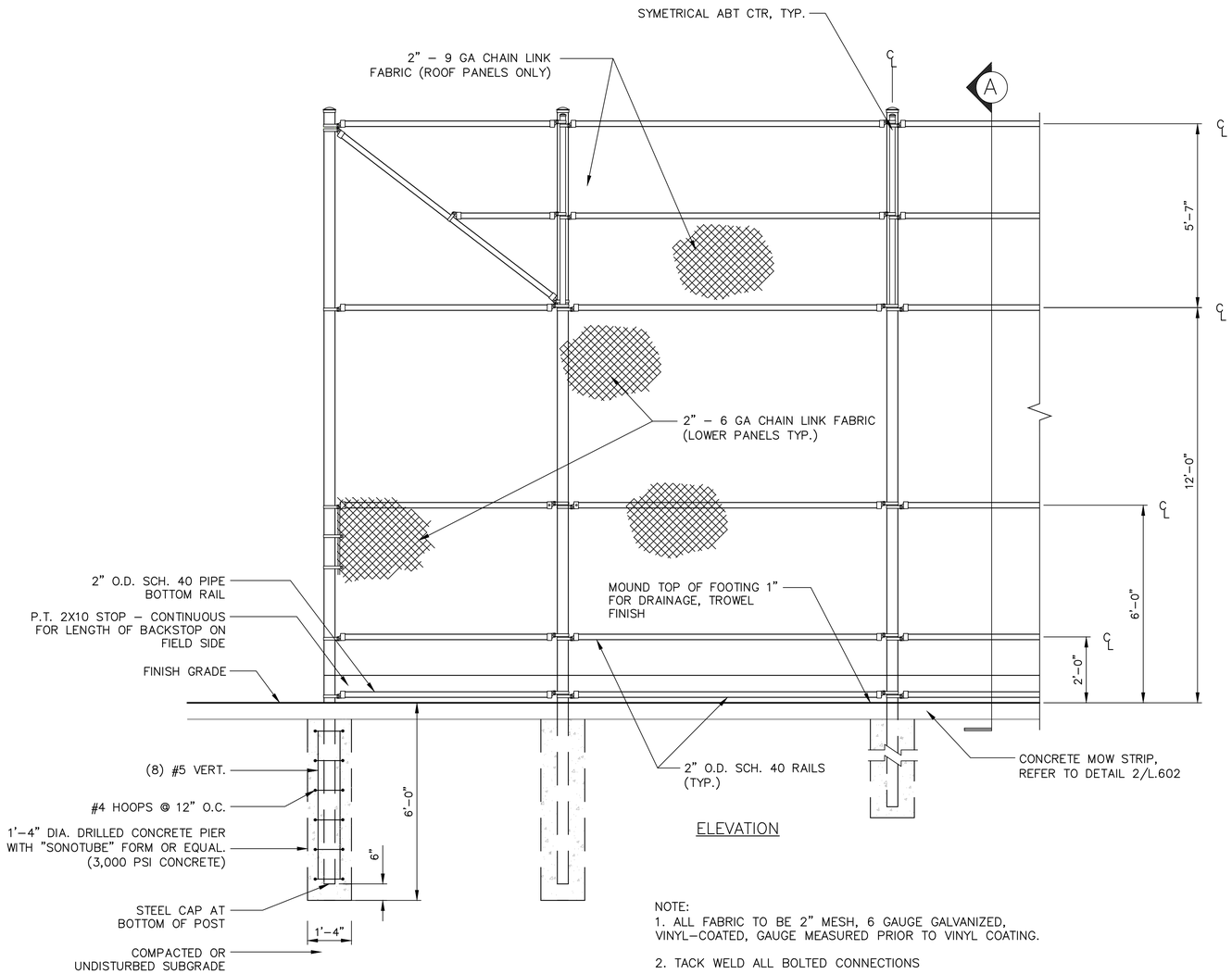

ELEVATION

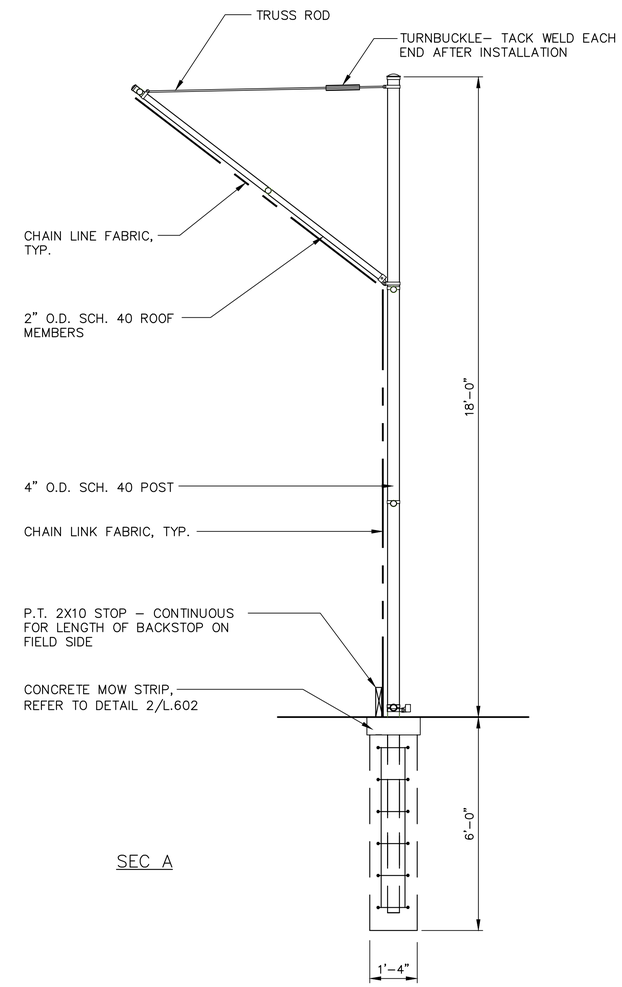

SEC A

NOTE:
1. ALL FABRIC TO BE 2" MESH, 6 GAUGE GALVANIZED, VINYL–COATED, GAUGE MEASURED PRIOR TO VINYL COATING.

2. TACK WELD ALL BOLTED CONNECTIONS

ELEVATION

1 SOFTBALL BACKSTOP
SCALE: 1/2"=1'–0"

Carolyn Cooney & Associates
Landscape Architecture / Planning

13 Elm Street, Milford, MA 01757
Telephone 508 478 8426, Facsimile 508 478 8607

No.	Description	Date

REVISIONS

Project:

CITY OF WALTHAM
ELSIE TURNER FIELD
421 TRAPELO ROAD
WALTHAM, MA 02452

Prepared For:

CITY OF WALTHAM
DEPARTMENT OF RECREATION
510 MOODY STREET
WALTHAM, MA 02453

TITLE:

BACKSTOP DETAILS

Scale AS NOTED Date OCT. 31, 2017
Drawn By CCC
Checked By DRB
Approved By VH
Project No. 1710.00

DWG No. L.606

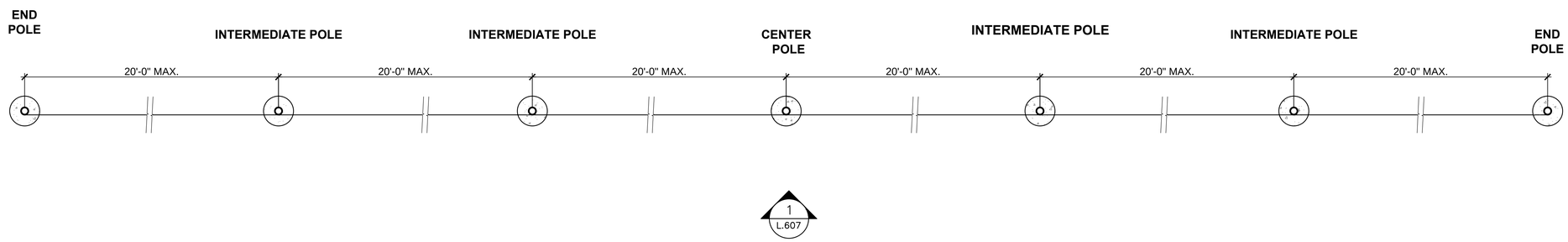

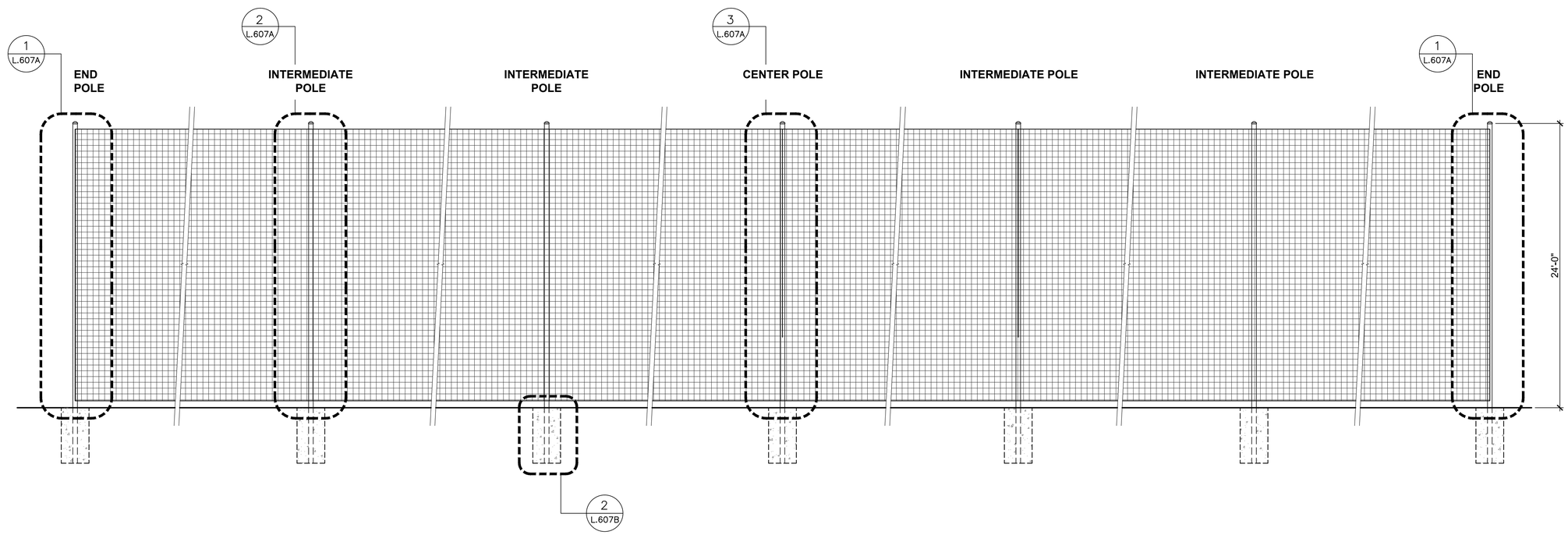

PLAN / ELEVATION

1 SPORTS NETTING
SCALE: 1/4"=1'-0"

Carolyn Cooney & Associates
Landscape Architecture / Planning
13 Elm Street, Milford, MA 01757
Telephone 508 478 8426, Facsimile 508 478 8607

No.	Description	Date

REVISIONS

Project:

CITY OF WALTHAM
ELSIE TURNER FIELD
421 TRAPELO ROAD
WALTHAM, MA 02452

Prepared For:

CITY OF WALTHAM
DEPARTMENT OF RECREATION
510 MOODY STREET
WALTHAM, MA 02453

TITLE:

SPORTS NETTING DETAILS

Scale EQUIPMENT DETAILS
Date OCT. 31, 2017
Drawn By CCC
Checked By DRB
Approved By VH
Project No. 1710.00

DWG No. L.607

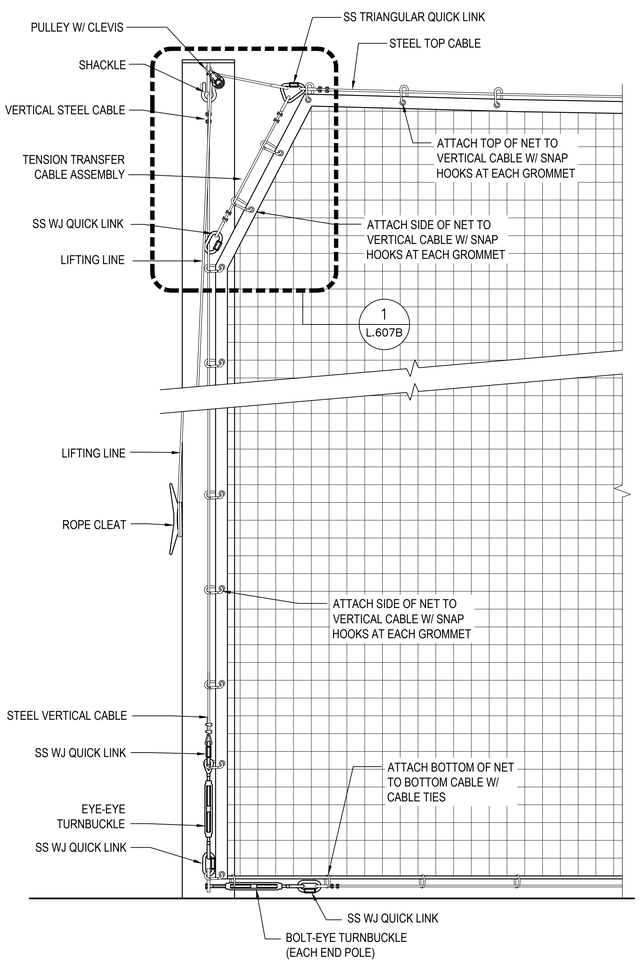

ELEVATION

1 SPORTS NETTING END POLE

SCALE 1-1/2"=1'-0"

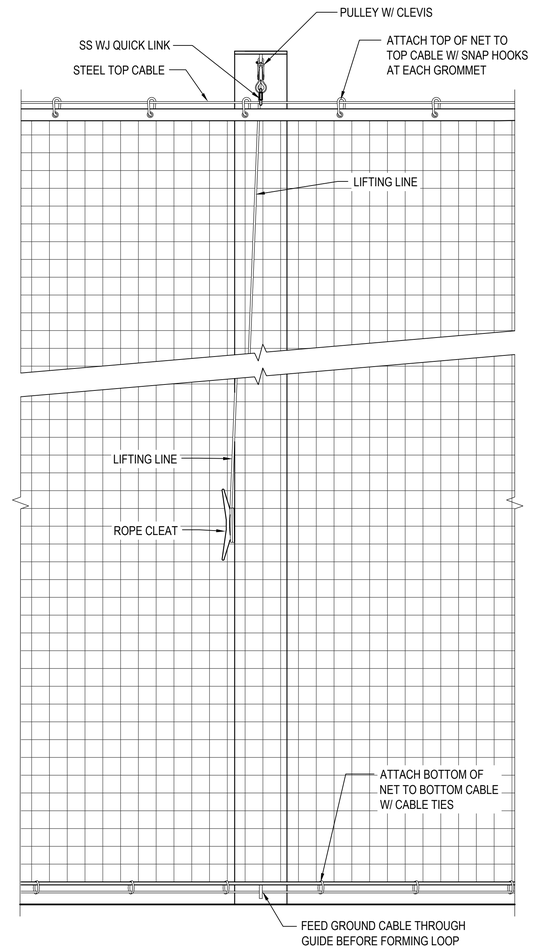

ELEVATION

2 SPORTS NETTING INTERMEDIATE POLE

SCALE 1-1/2"=1'-0"

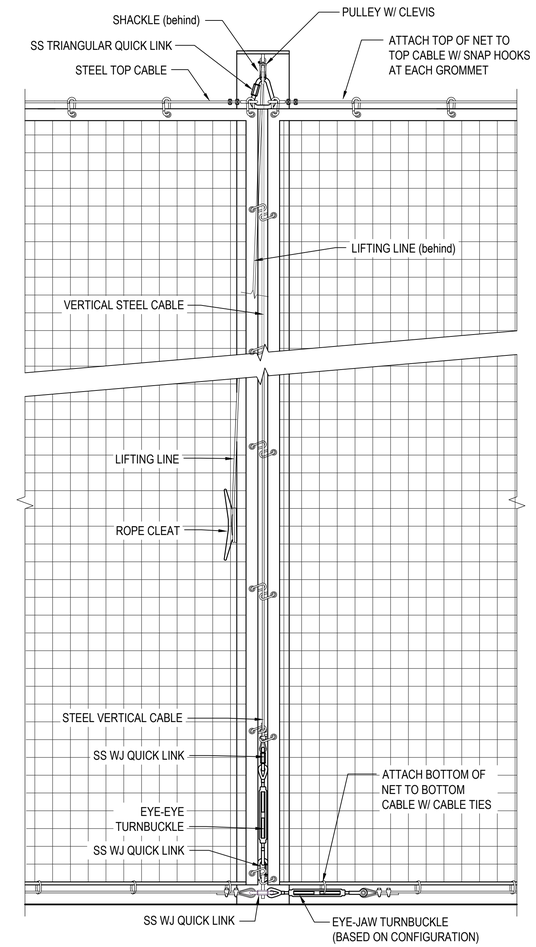

ELEVATION

3 SPORTS NETTING CENTER POLE

SCALE 1-1/2"=1'-0"

Carolyn Cooney & Associates

Landscape Architecture / Planning

13 Elm Street, Milford, MA 01757
Telephone 508 478 8426, Facsimile 508 478 8607

No.	Description	Date

REVISIONS

Project:

CITY OF WALTHAM
ELSIE TURNER FIELD
421 TRAPELO ROAD
WALTHAM, MA 02452

Prepared For:

CITY OF WALTHAM
DEPARTMENT OF RECREATION
510 MOODY STREET
WALTHAM, MA 02453

TITLE:

SPORTS NETTING DETAILS

Scale	EQUIPMENT DETAILS
Date	OCT. 31, 2017
Drawn By	CCC
Checked By	DRB
Approved By	VH
Project No.	1710.00

DWG No. L.607A

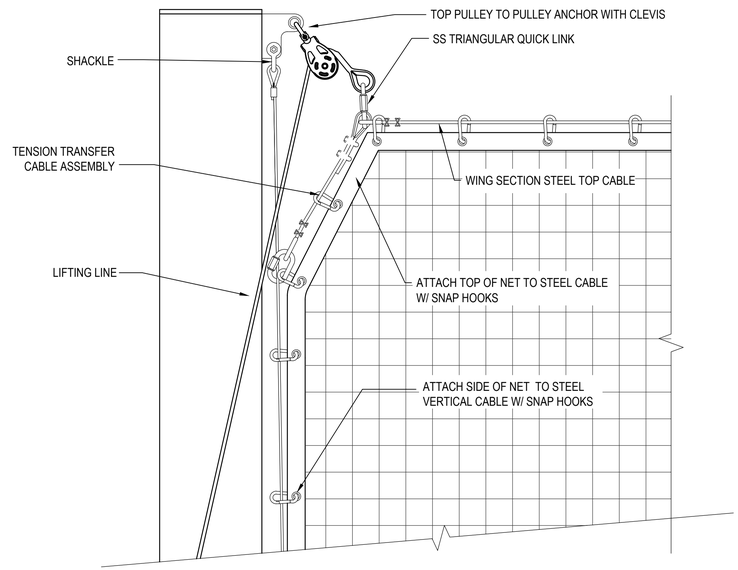

ELEVATION

1 TOP PULLEY CONNECTION DETAIL, TYP.

SCALE 3"=1'-0"

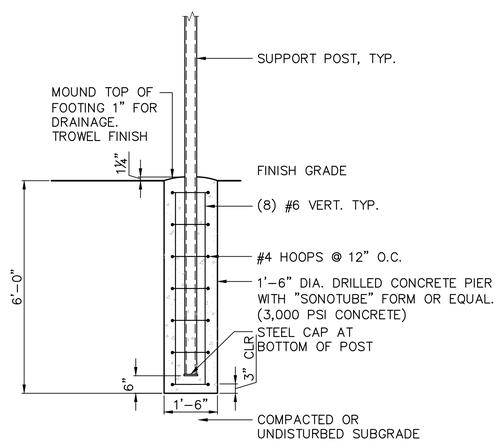

SECTION

2 SPORTS NETTING FOOTING DETAIL, TYP.

SCALE 1/2"=1'-0"

Carolyn Cooney & Associates
Landscape Architecture / Planning
13 Elm Street, Milford, MA 01757
Telephone 508 478 8426, Facsimile 508 478 8607

No.	Description	Date

REVISIONS

Project:

CITY OF WALTHAM
ELSIE TURNER FIELD
421 TRAPELO ROAD
WALTHAM, MA 02452

Prepared For:

CITY OF WALTHAM
DEPARTMENT OF RECREATION
510 MOODY STREET
WALTHAM, MA 02453

TITLE:

SPORTS NETTING DETAILS

Scale	EQUIPMENT DETAILS
Date	OCT. 31, 2017
Drawn By	CCC
Checked By	DRB
Approved By	VH
Project No.	1710.00

DWG No. L.607B

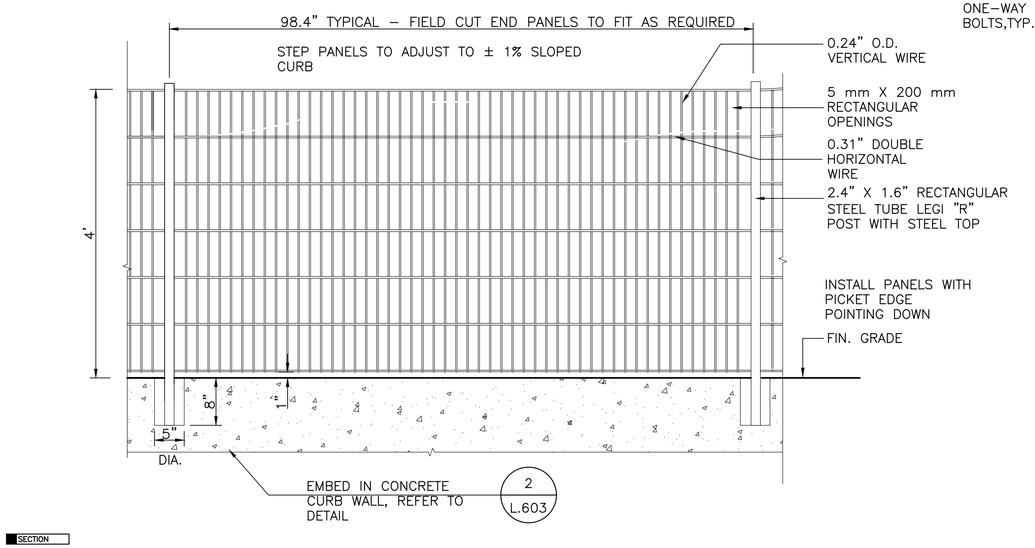

SECTION

1 WELDED WIRE FENCE DETAIL
1" = 1'-0"

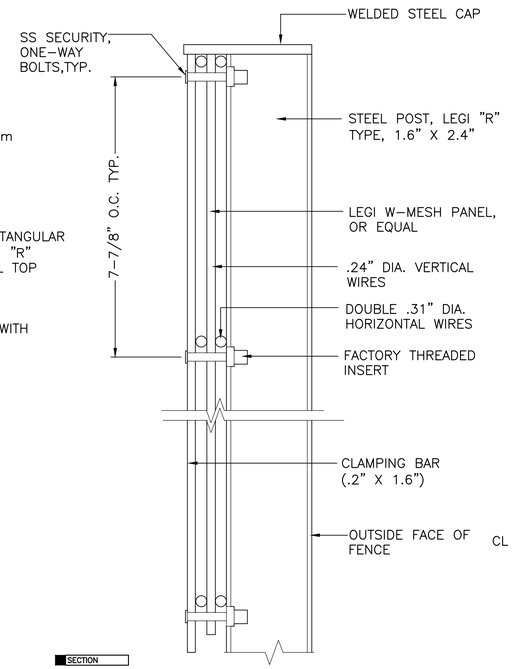

SECTION

2 FENCE POST SECTION
1/2 SCALE

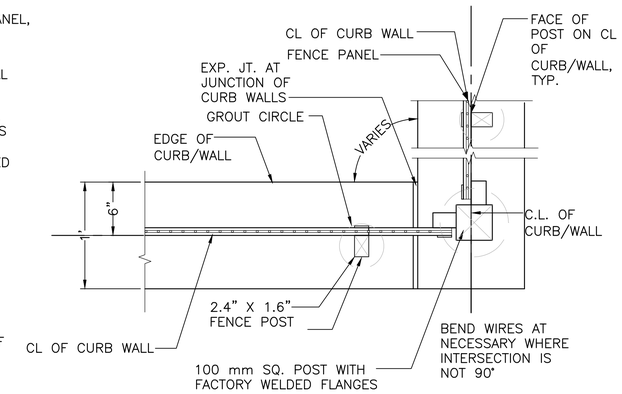

PLAN

3 CORNER POST DETAIL
N.T.S.

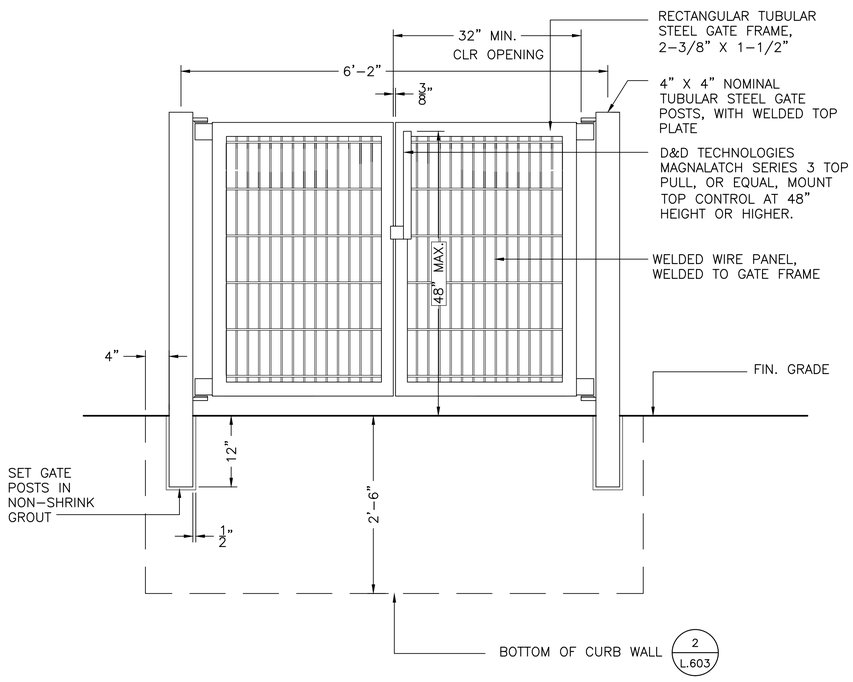

SECTIONAL ELEVATION

4 DOUBLE GATE
SCALE: 1" = 1'-0"

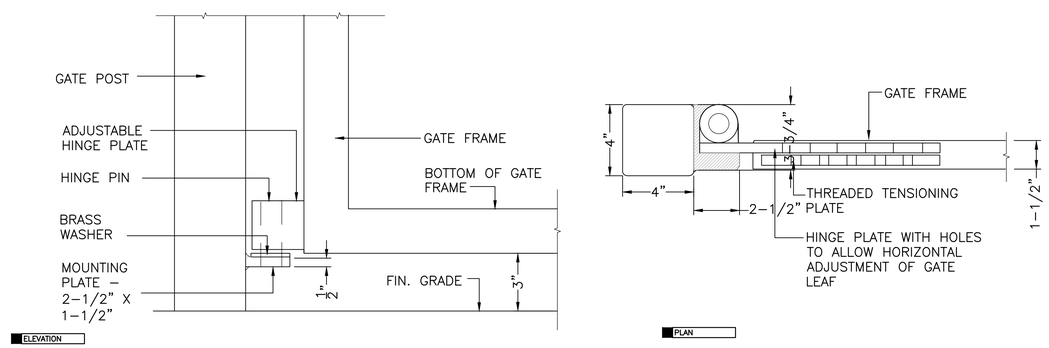

5 GATE FRAME DETAIL
1" = 1'-0"

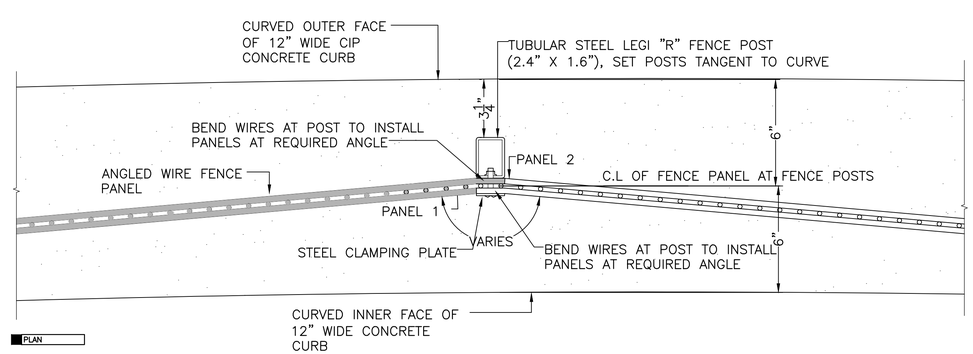

6 TYPICAL ATTACHMENT AT POSTS
SCALE: ONE QUARTER SIZE

Carolyn Cooney & Associates
Landscape Architecture / Planning
13 Elm Street, Milford, MA 01757
Telephone 508 478 8426, Facsimile 508 478 8607

No.	Description	Date

REVISIONS

Project:

CITY OF WALTHAM
ELSIE TURNER FIELD
421 TRAPELO ROAD
WALTHAM, MA 02452

Prepared For:

CITY OF WALTHAM
DEPARTMENT OF RECREATION
510 MOODY STREET
WALTHAM, MA 02453

TITLE:

WELDED WIRE FENCE DETAILS

Scale AS NOTED Date OCT. 31, 2017
Drawn By CCC
Checked By DRB
Approved By VH
Project No. 1710.00

DWG No. L.608

FOOTING DETAILS ARE SUPPLIED TO ASSIST IN BIDDING CONCRETE QUANTITIES, AND TO SHOW GENERAL RELATIONSHIPS. REFER TO MANUFACTURER'S SHOP DRAWINGS AND INSTRUCTIONS TO CONFIRM DIMENSIONS PRIOR TO INSTALLATION. MANUFACTURER'S DIMENSIONS AND INSTRUCTIONS TAKE PRECENDENCE.

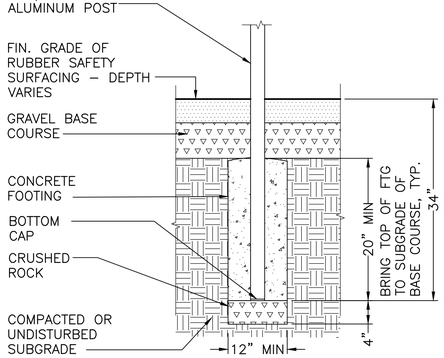

SECTION

1 TYPICAL PLAY SHAPER FOOTING
SCALE: 1" = 1'-0"

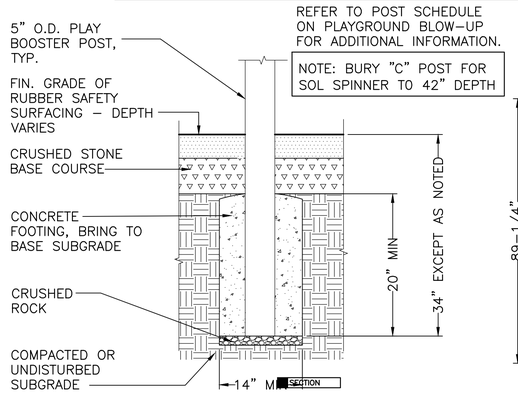

SECTION

2 TYPICAL PLAY BOOSTER POST FOOTING
SCALE: 1" = 1'-0"

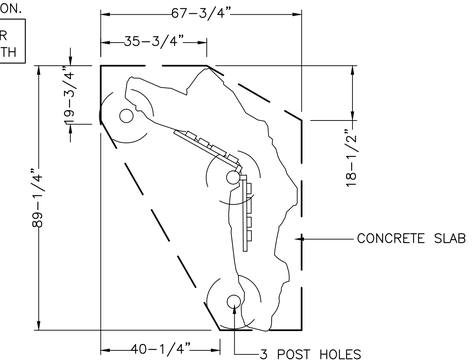

PLAN

3 THE DEN ROCK
SCALE: 1/2" = 1'-0"

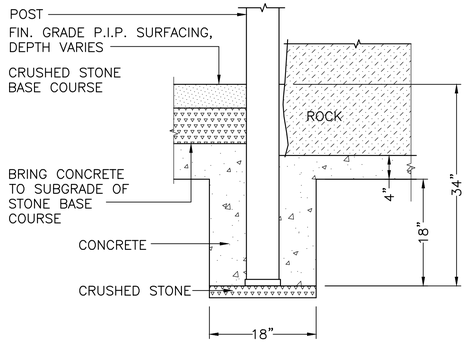

SECTION

4 THE DEN ROCK POST HOLE DETAIL
SCALE: 1" = 1'-0"

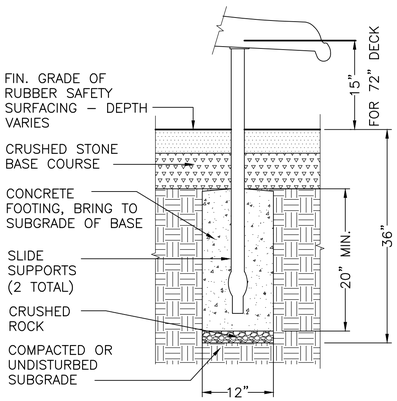

SECTION

5 DOUBLE SWOOCH SLIDE
SCALE: 1" = 1'-0"

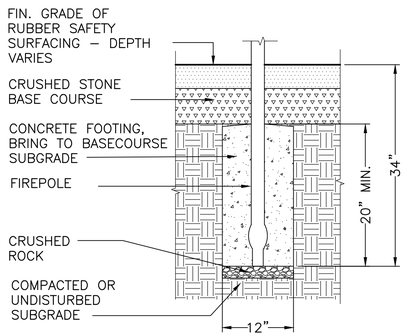

SECTION

6 FIREPOLE
SCALE: 1" = 1'-0"

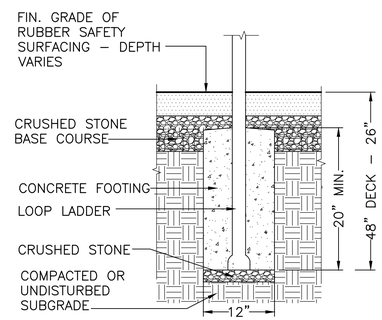

SECTION

7 LOOP LADDER
SCALE: 1" = 1'-0"

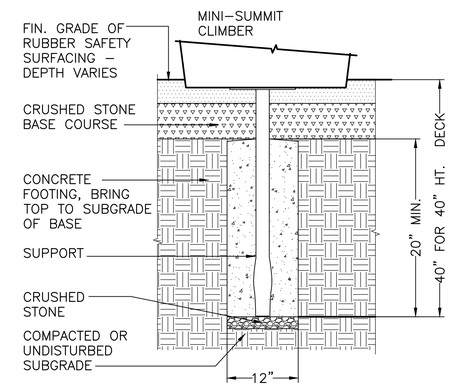

SECTION

8 MINI-SUMMIT CLIMBER
SCALE: 1" = 1'-0"

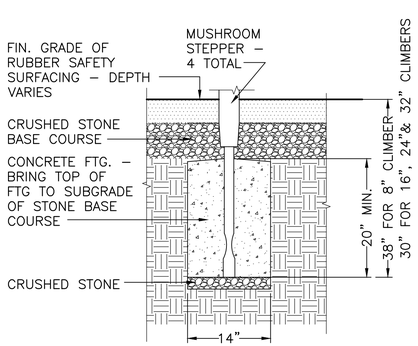

SECTION

9 MUSHROOM STEPPER AND RAIL FOOTINGS
SCALE: 1" = 1'-0"

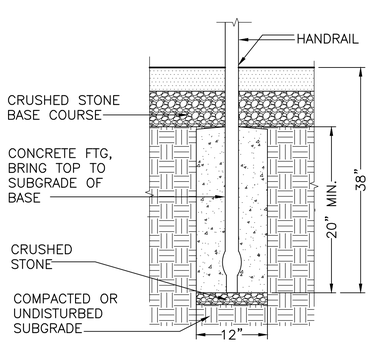

SECTION

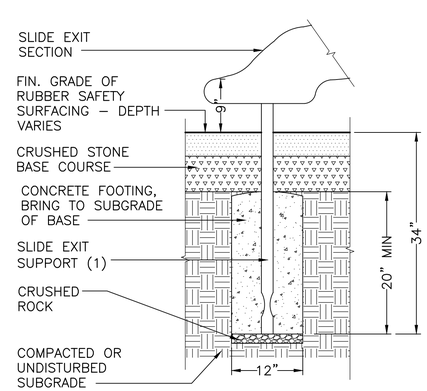

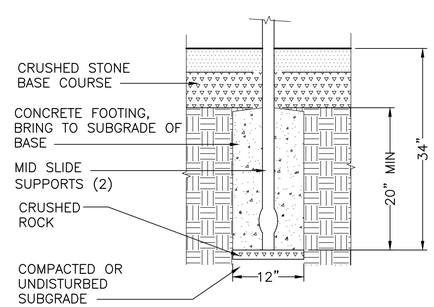

SECTION

10 SLIDEWINDER2 FOOTINGS
SCALE: 1" = 1'-0"

Carolyn Cooney & Associates
Landscape Architecture / Planning
13 Elm Street, Milford, MA 01757
Telephone 508 478 8426, Facsimile 508 478 8607

No.	Description	Date

REVISIONS

Project:

CITY OF WALTHAM
ELSIE TURNER FIELD
421 TRAPELO ROAD
WALTHAM, MA 02452

Prepared For:

CITY OF WALTHAM
DEPARTMENT OF RECREATION
510 MOODY STREET
WALTHAM, MA 02453

TITLE:

PLAY EQUIPMENT FOOTING DETAILS

Scale AS NOTED Date OCT. 31, 2017
Drawn By CCC
Checked By DRB
Approved By VH
Project No. 1710.00

DWG No. L.610

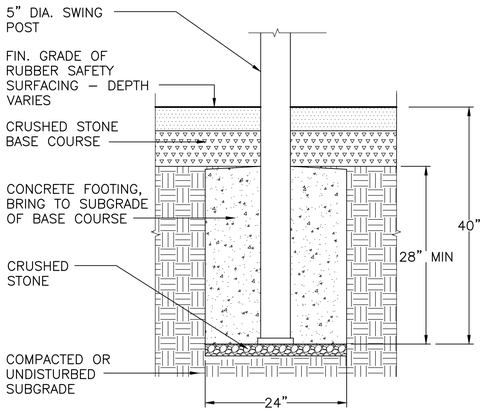

SECTION

1 SINGLE POST SWING FOOTINGS
SCALE: 1" = 1'-0"

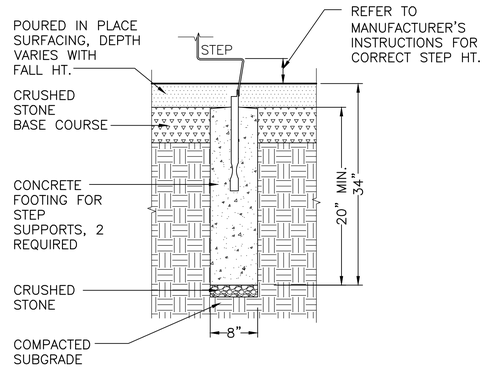

SECTION

2 TRANSFER STEP
SCALE: 1" = 1'-0"

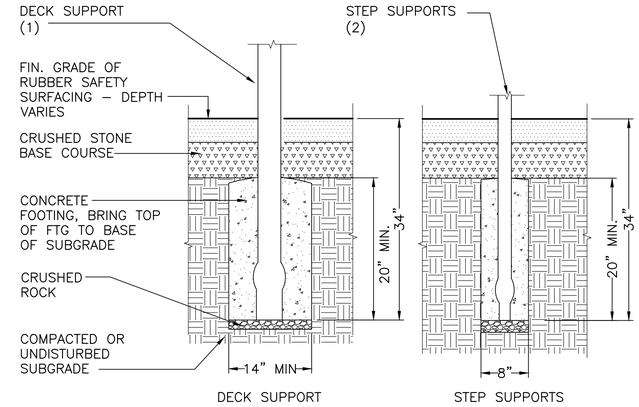

SECTION

3 TRANSFER MODULE WITH HANDRAILS
SCALE: 1" = 1'-0"

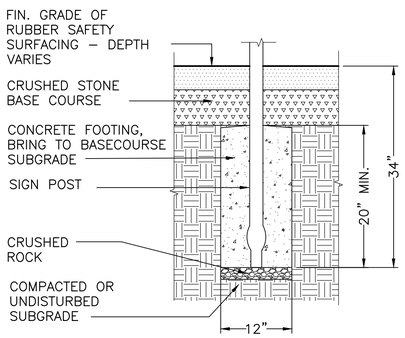

SECTION

4 PLAYGROUND SIGN POST FOOTING
SCALE: 1" = 1'-0"

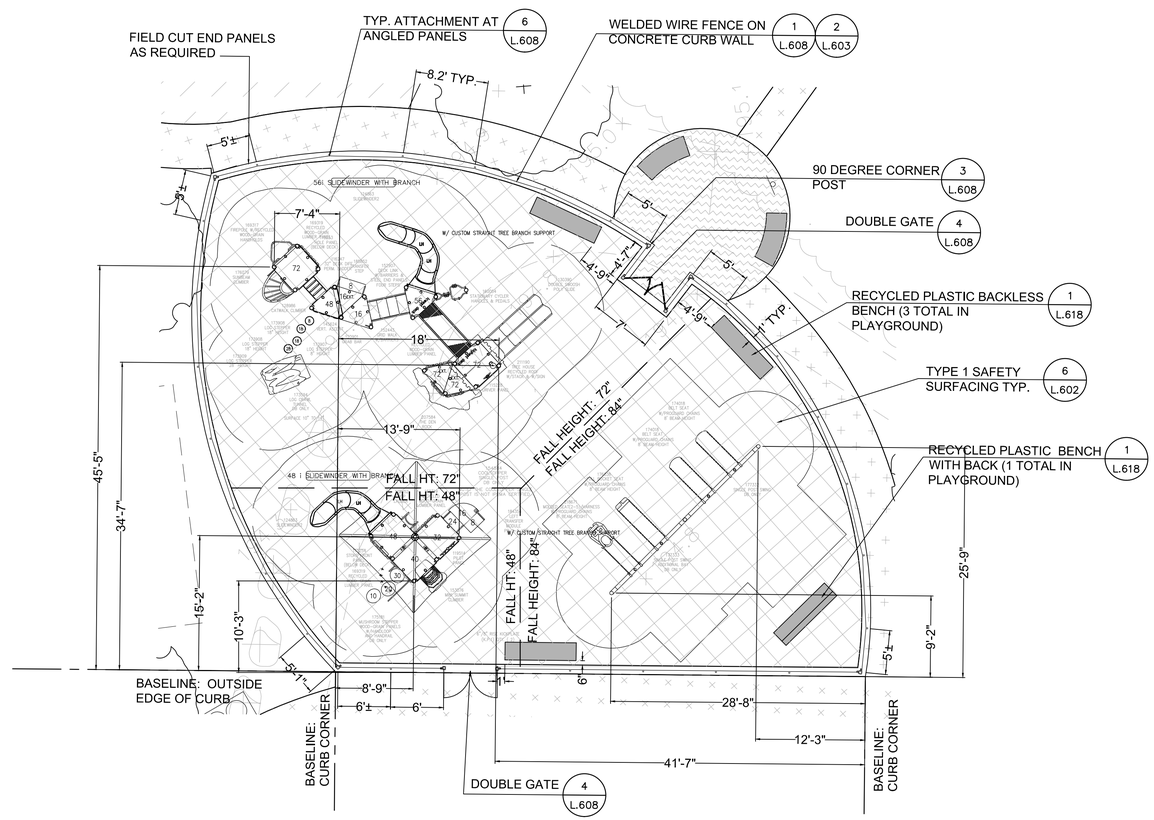

PLAN

5 PLAYGROUND ENLARGEMENT
SCALE 1/8"=1'=0"

Carolyn Cooney & Associates
Landscape Architecture / Planning
13 Elm Street, Milford, MA 01757
Telephone 508 478 8426, Facsimile 508 478 8607

No.	Description	Date

REVISIONS

North

Project:

CITY OF WALTHAM
ELSIE TURNER FIELD
421 TRAPELO ROAD
WALTHAM, MA 02452

Prepared For:

CITY OF WALTHAM
DEPARTMENT OF RECREATION
510 MOODY STREET
WALTHAM, MA 02453

TITLE:

PLAY ENLARGEMENT & FOOTING DETAILS

Scale AS NOTED Date OCT. 31, 2017
Drawn By CCC
Checked By DRB
Approved By VH
Project No. 1710.00

DWG No. L.611

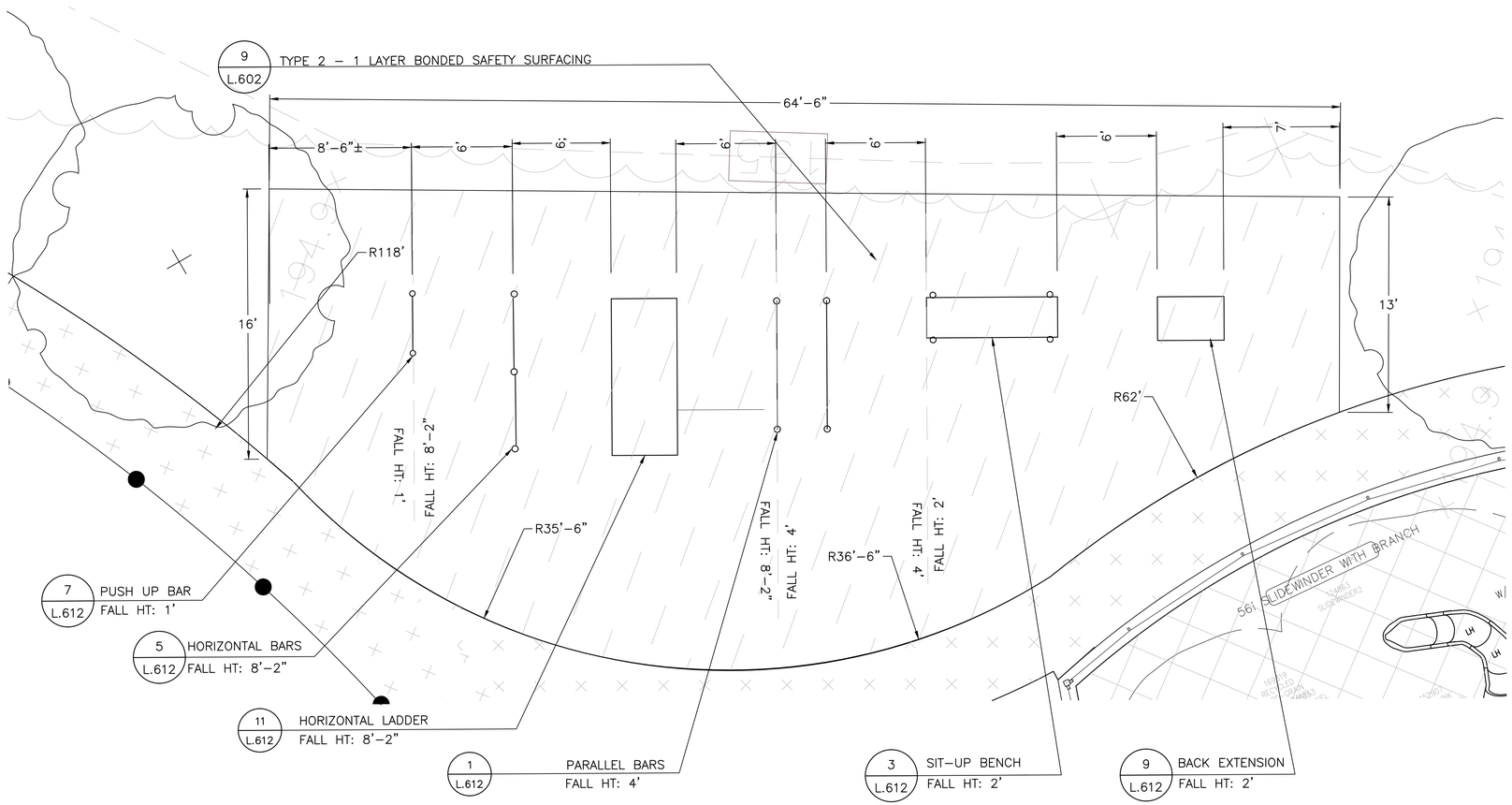

PLAN

1 EXERCISE AREA ENLARGEMENT PLAN

SCALE: 1/4" – 1'–0"

Carolyn Cooney & Associates

Landscape Architecture / Planning

13 Elm Street, Milford, MA 01757
Telephone 508 478 8426, Facsimile 508 478 8607

No.	Description	Date

REVISIONS

North

Project:

CITY OF WALTHAM
ELSIE TURNER FIELD
421 TRAPELO ROAD
WALTHAM, MA 02452

Prepared For:

CITY OF WALTHAM
DEPARTMENT OF RECREATION
510 MOODY STREET
WALTHAM, MA 02453

TITLE:

EXERCISE AREA
ENLARGEMENT

Scale AS NOTED Date OCT. 31, 2017
Drawn By CCC
Checked By DRB
Approved By VH
Project No. 1710.00

DWG No. L.612

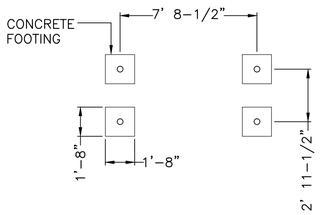

PLAN

1 EXERCISE STATION – PARALLEL BARS
1/4" = 1'-0"

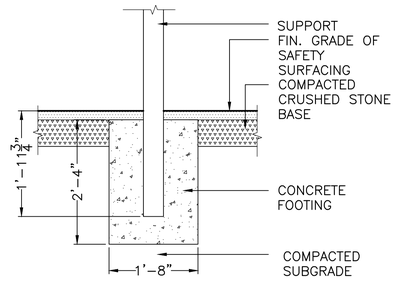

SECTION

2 EXERCISE STATION – PARALLEL BARS
3/4" = 1'-0"

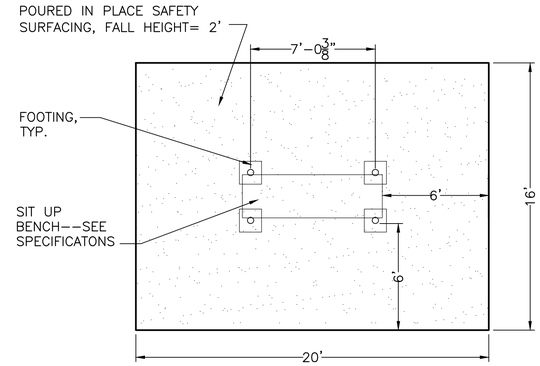

PLAN

3 EXERCISE STATION–SIT UP BENCH
1/4" = 1'-0"

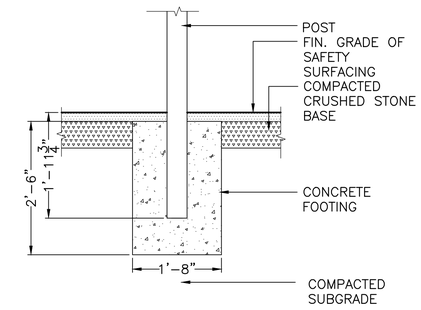

SECTION

4 EXERCISE STATION – SIT UP BENCH FOOTINGS
3/4" = 1'-0"

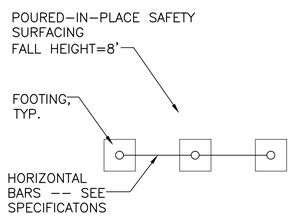

PLAN

5 EXERCISE STATION–HORIZONTAL BARS
1/4" = 1'-0"

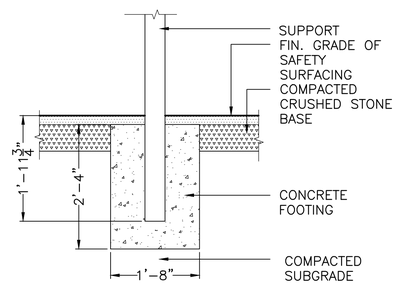

SECTION

6 EXERCISE STATION – HORIZONTAL BARS – FTGS
3/4" = 1'-0"

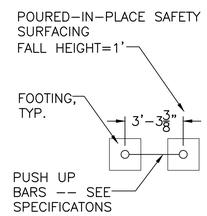

PLAN

7 EXERCISE STATION– PUSH UP BAR
1/4" = 1'-0"

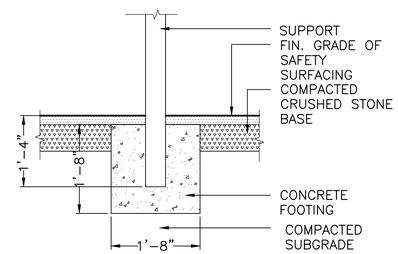

SECTION

8 EXERCISE STATION–PUSH UP BAR FOOTINGS
3/4" = 1'-0"

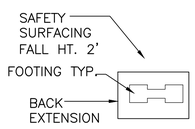

PLAN

9 EXERCISE STATION – BACK EXTENSION
1/4" = 1'-0"

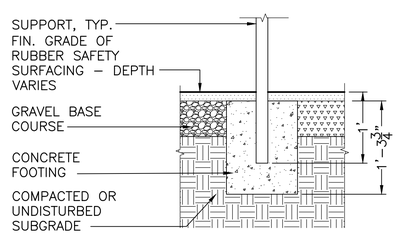

SECTION

10 EXERCISE STATION– BACK EXTENSION FTG
1" = 1'-0"

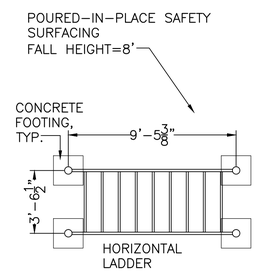

PLAN

11 EXERCISE STATION– HORIZ. LADDER
1/4" = 1'-0"

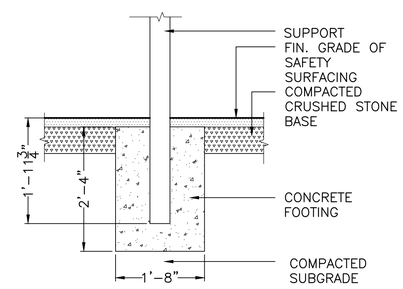

SECTION

12 EXERCISE STATION– HORIZ. LADDER FOOTING
1" = 1'-0"

Carolyn Cooney & Associates
Landscape Architecture / Planning
13 Elm Street, Milford, MA 01757
Telephone 508 478 8426, Facsimile 508 478 8607

No.	Description	Date

REVISIONS

Project:

CITY OF WALTHAM
ELSIE TURNER FIELD
421 TRAPELO ROAD
WALTHAM, MA 02452

Prepared For:

CITY OF WALTHAM
DEPARTMENT OF RECREATION
510 MOODY STREET
WALTHAM, MA 02453

TITLE:

EXERCISE EQUIPMENT EQUIPMENT

Scale AS NOTED Date OCT. 31, 2017
Drawn By CCC
Checked By DRB
Approved By VH
Project No. 1710.00

DWG No. L.613

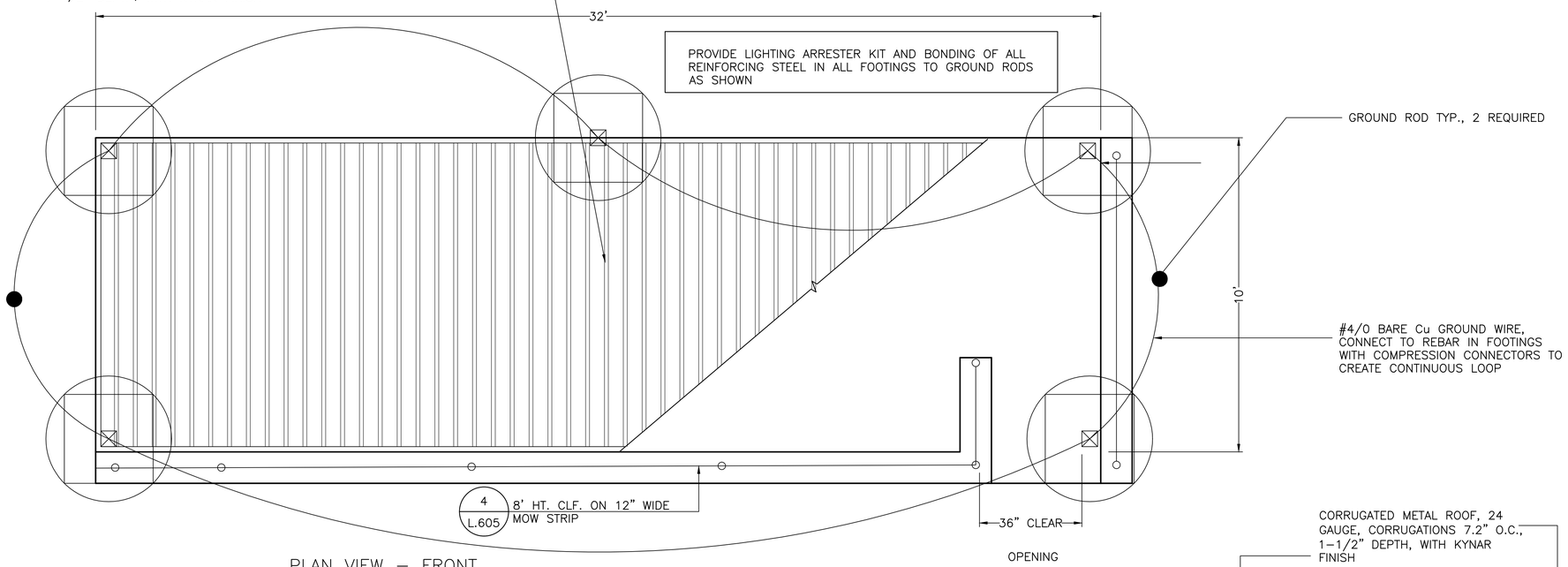

PLAN VIEW – FRONT

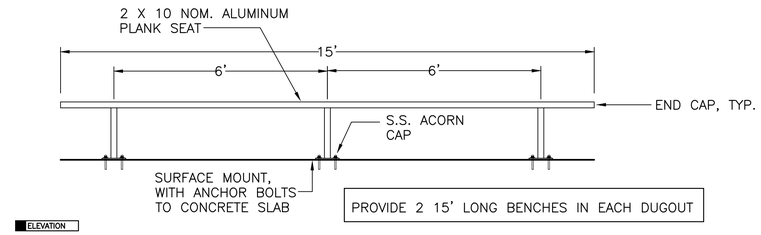

ELEVATION

1 PLAYERS BENCHES
SCALE 1/2"=1'=0"

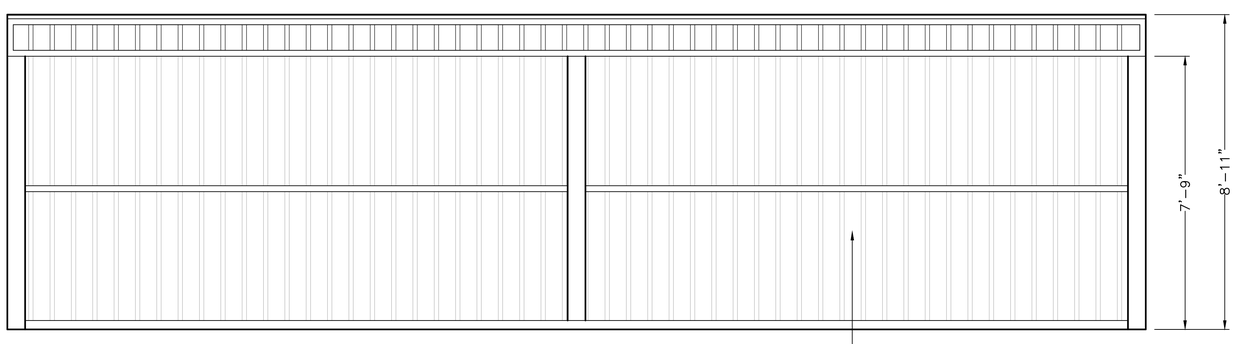

ELEVATION – FRONT

CORRUGATED METAL ROOFING TO FORM DUGOUT BACK WALL, 24 GAUGE, CORRUGATIONS 7.2" O.C., 1-1/2" DEPTH, WITH KYNAR FINISH

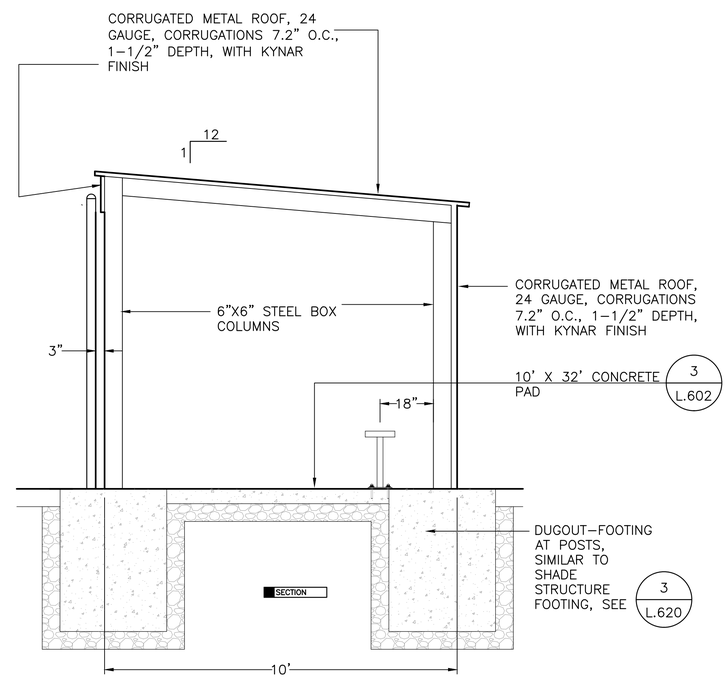

PLAN

SECTION

2 DUGOUT
SCALE 1/2"=1'=0"

Carolyn Cooney & Associates
Landscape Architecture / Planning
13 Elm Street, Milford, MA 01757
Telephone 508 478 8426, Facsimile 508 478 8607

No.	Description	Date

REVISIONS

Project:

CITY OF WALTHAM
ELSIE TURNER FIELD
421 TRAPELO ROAD
WALTHAM, MA 02452

Prepared For:

CITY OF WALTHAM
DEPARTMENT OF RECREATION
510 MOODY STREET
WALTHAM, MA 02453

TITLE:

DUGOUT SHELTER DETAILS

Scale AS NOTED Date OCT. 31, 2017
Drawn By CCC
Checked By DRB
Approved By VH
Project No. 1710.00

DWG No. L.614

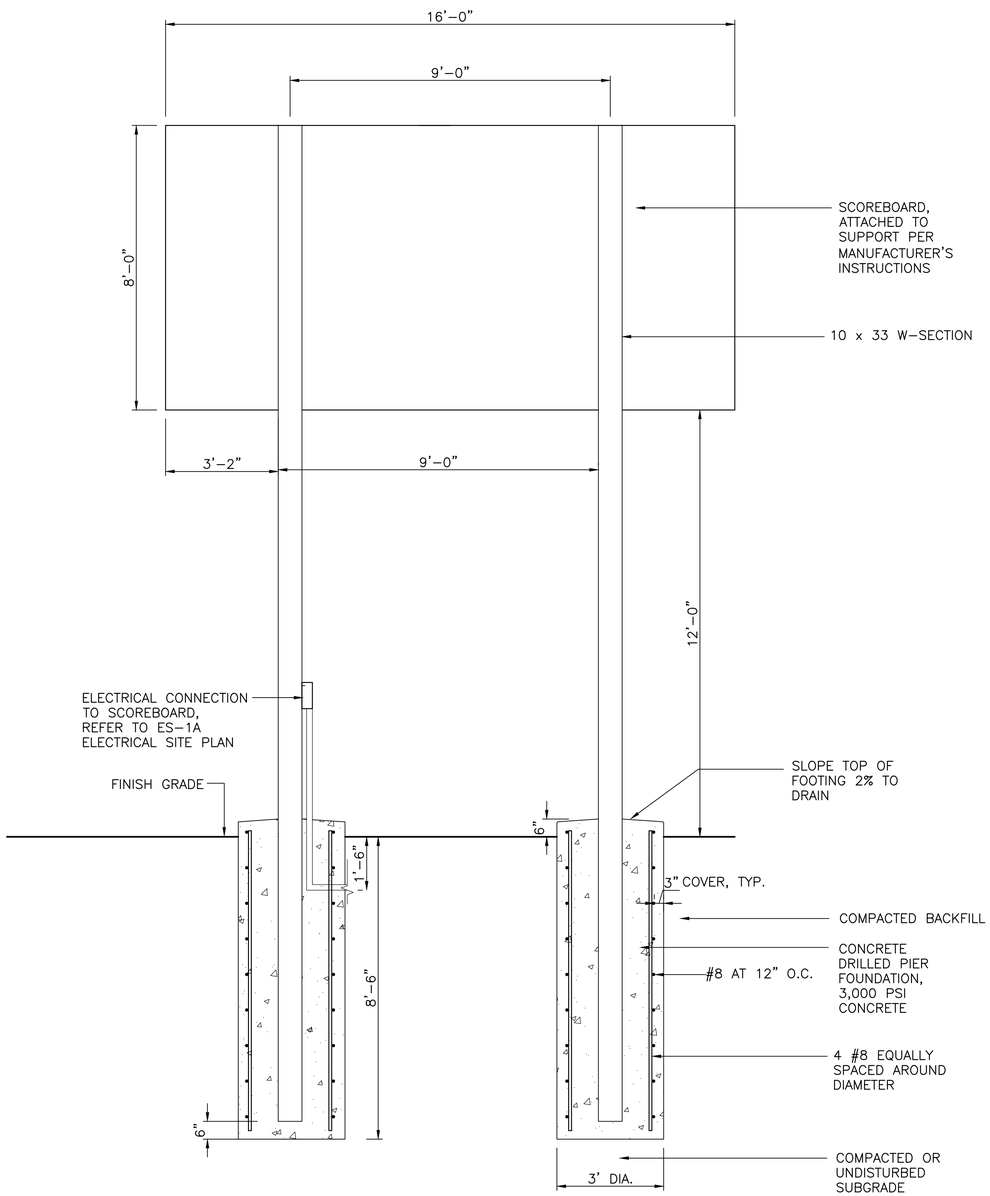

1 SCOREBOARD INSTALLATION DETAIL
SCALE: 1/2" = 1'=0"

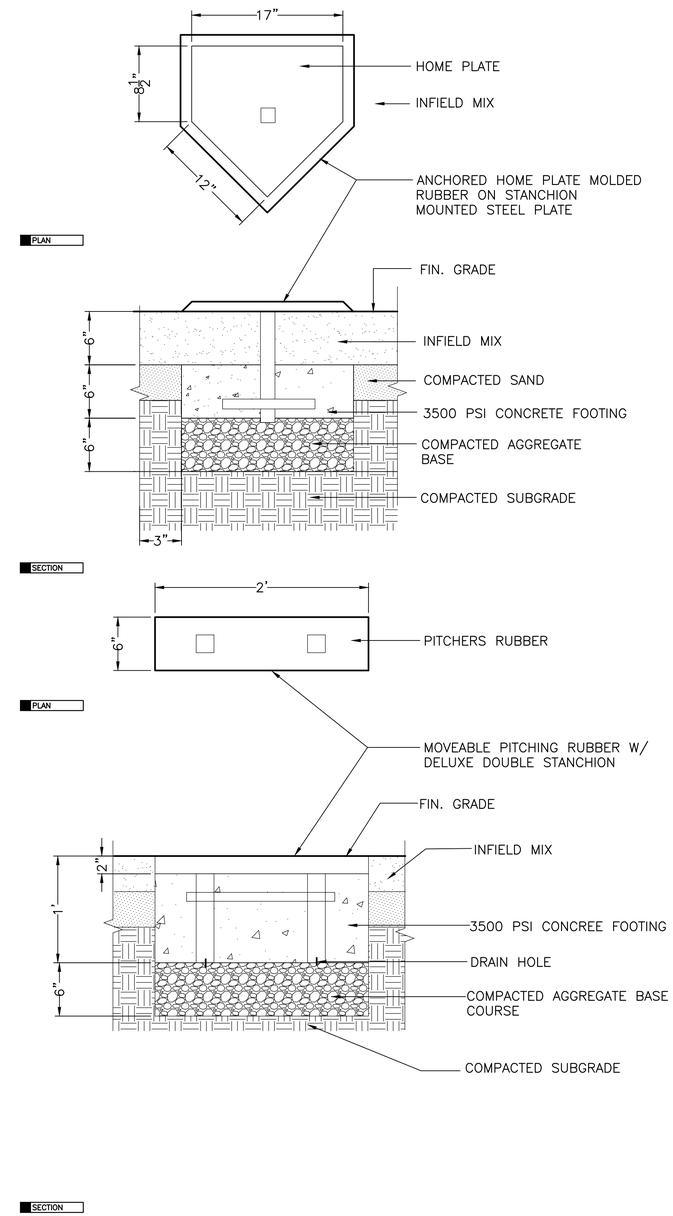

3 HOME PLATE AND PITCHERS RUBBER
SCALE: 1-1/2" = 1'=0"

Carolyn Cooney & Associates
Landscape Architecture / Planning
13 Elm Street, Milford, MA 01757
Telephone 508 478 8426, Facsimile 508 478 8607

No.	Description	Date

REVISIONS

Project:

CITY OF WALTHAM
ELSIE TURNER FIELD
421 TRAPELO ROAD
WALTHAM, MA 02452

Prepared For:

CITY OF WALTHAM
DEPARTMENT OF RECREATION
510 MOODY STREET
WALTHAM, MA 02453

TITLE:

SCOREBOARD/SOFTBALL FIELD DETAILS

Scale AS NOTED Date OCT. 31, 2017
Drawn By CCC
Checked By DRB
Approved By VH
Project No. 1710.00

DWG No. L.615

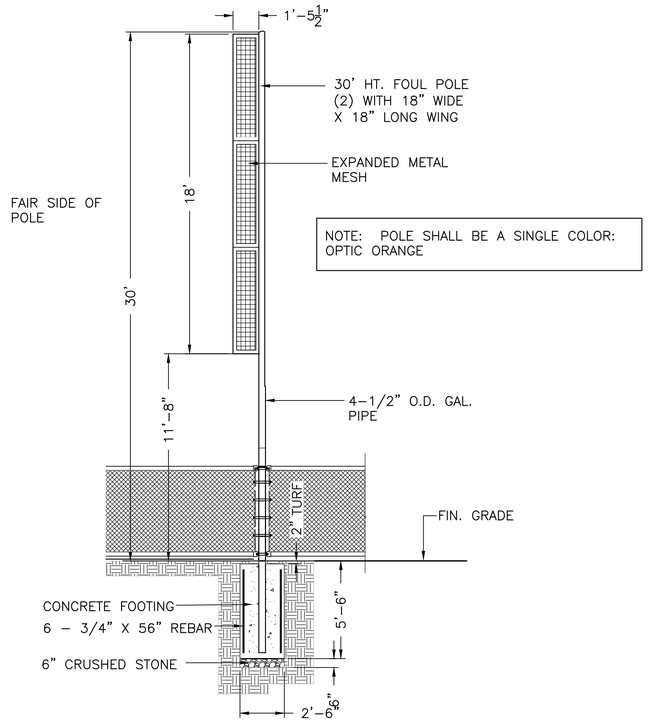

SECTION

1 30' FOUL POLE
SCALE: 1/4" = 1'-0"

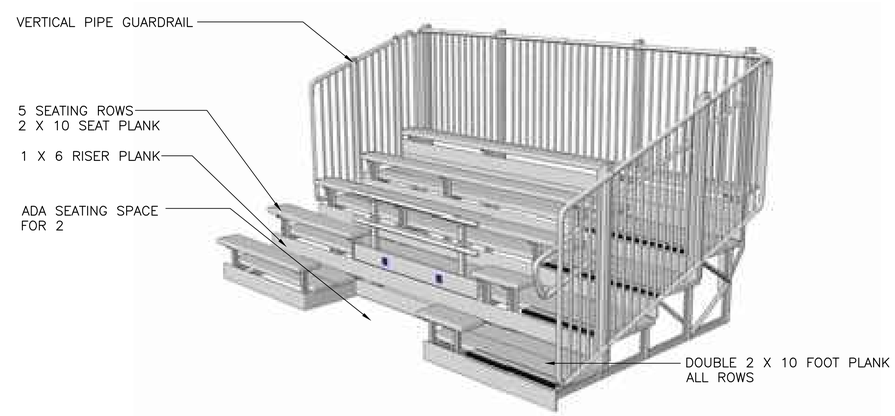

ISOMETRIC

2 5 ROW ADA ALUMINUM BLEACHER
SCALE: NTS

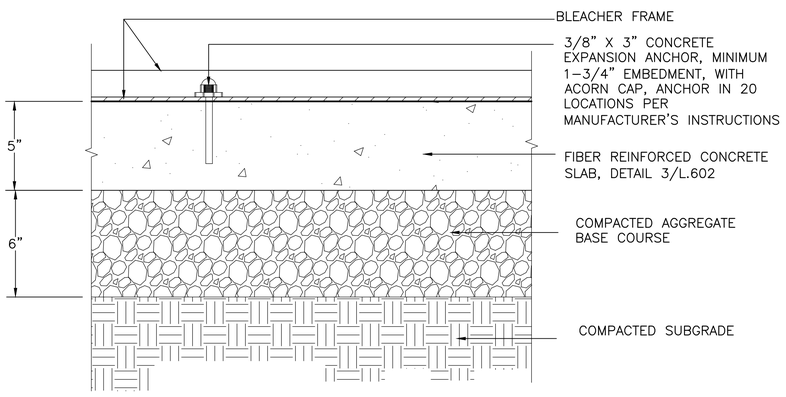

SECTION

3 BLEACHER ATTACHMENT
SCALE: ONE-QUARTER SIZE

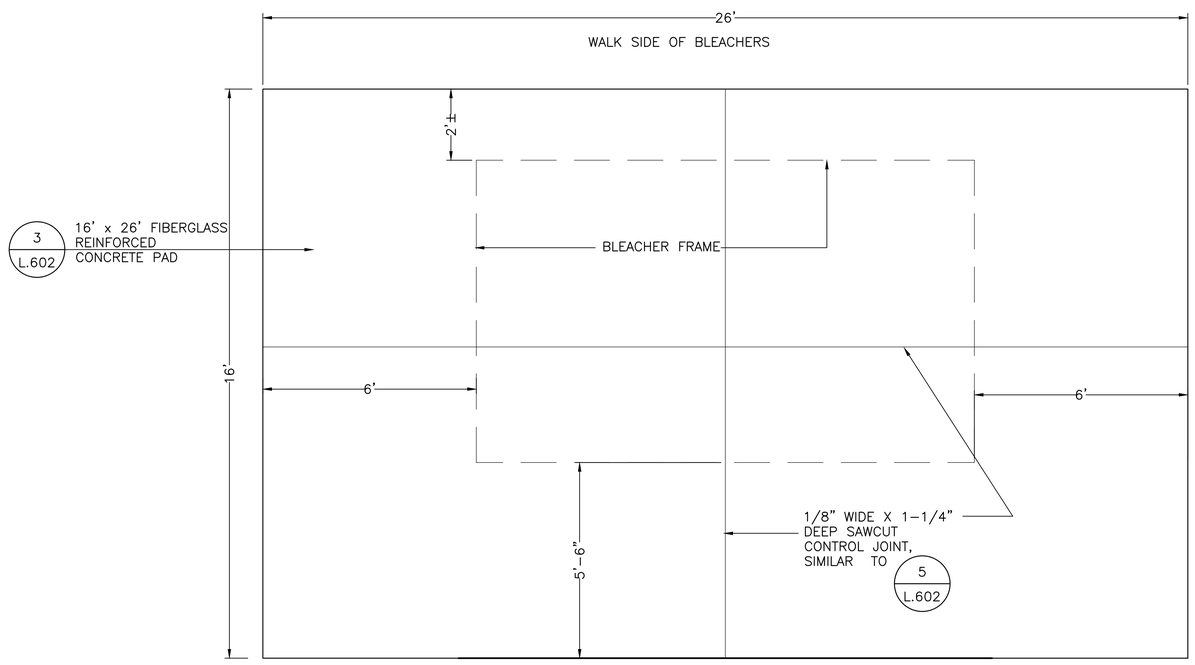

PLAN

4 CONCRETE BLEACHER PAD
SCALE: 1/2" = 1'-0"

Carolyn Cooney & Associates
Landscape Architecture / Planning
13 Elm Street, Milford, MA 01757
Telephone 508 478 8426, Facsimile 508 478 8607

No.	Description	Date

REVISIONS

Project:

CITY OF WALTHAM
ELSIE TURNER FIELD
421 TRAPELO ROAD
WALTHAM, MA 02452

Prepared For:

CITY OF WALTHAM
DEPARTMENT OF RECREATION
510 MOODY STREET
WALTHAM, MA 02453

TITLE:

FOUL POLE / BLEACHER DETAILS

Scale AS NOTED Date OCT. 31, 2017
Drawn By CCC
Checked By DRB
Approved By VH
Project No. 1710.00

DWG No. L.616

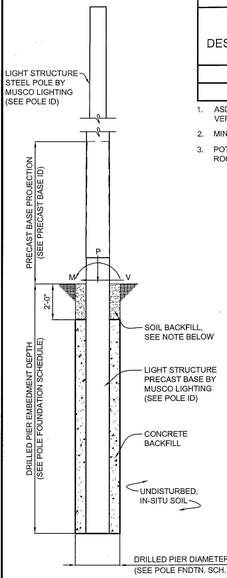

POLE FOUNDATION ELEV.

SCALE: NOT TO SCALE

SOIL BACKFILL NOTE:
THE TOP TWO FEET OF ANNULUS SHALL BE BACKFILLED WITH SOIL, WITH A CLASSIFICATION OF CLASS 5 (TABLE 1806.2) OR BETTER. COMPACTION, 95% FOR COHESIVE SOIL AND 98% FOR A COHESIONLESS SOIL BASED UPON STANDARD PROCTOR TESTING (ASTM D698).

POLE FOUNDATION SCHEDULE

POLE DESIGNATION	FORCES (1.)			DRILLED PIER		
	MOMENT (M) FT-LBS	SHEAR (V) LBS	VERTICAL (P) LBS	DIAMETER INCHES	EMBEDMENT DEPTH	CONCRETE BACKFILL YD^3 (2.)
A1, A2	49,819	1,358	1,440	48	12'-0"	4.3
B1, B2	91,875	2,047	2,221	48	14'-0"	5.0

1. ASD LOAD COMBINATION D + W.
   VERTICAL FORCE IS WEIGHT OF DRESSED POLE (DOES NOT INCLUDE PRECAST BASE WEIGHT).
2. MINIMUM CONCRETE BACKFILL VOLUME, SITE CONDITIONS MAY REQUIRE ADDITIONAL BACKFILL.
3. POTENTIAL FOR ENCOUNTERING ROCK BEFORE REACHING EMBEDMENT DEPTH.
   ROCK AUGERING EQUIPMENT MAY BE REQUIRED.

PRECAST BASE IDENTIFICATION

PRECAST BASE TYPE	PRECAST BASE WEIGHT	PRECAST BASE LENGTH	PROJECTION ABOVE GRADE	STANDARD EMBEDMENT	OUTSIDE DIAMETER
3B	2,470 LBS	20'-0"	8'-0"	12'-0"	13.38"
4B	3,490 LBS	22'-0"	8'-0"	14'-0"	15.75"

POLE IDENTIFICATION

POLE DESIGNATION	POLE TYPE	PRECAST BASE TYPE	FIXTURE CONFIGURATION (FIX. PER XARM)	FIXTURE AND ACCESSORIES EPA (FT^2)
A1, A2	LSS60B	3B	4 (3)	12.0
B1, B2	LSS70C	4B	6 (5)	17.9

- ALL POLES HAVE (1) MUSCO LED FIXTURE AT 25'-0" AGL, INCLUDED ABOVE.

DESIGN NOTES

DESIGN PARAMETERS:
WIND: 105 MPH (EXP. C, I = 1.0) PER IBC CODE, 2009 EDITION (ASCE 7-05).
DESIGN WIND PARAMETERS ARE AS NOTED. ACTUAL WIND SPEED AND EXPOSURE MUST BE VERIFIED FOR THE SITE BY THE PROPER GOVERNING OFFICIAL.

GEOTECHNICAL PARAMETERS:
REQUIRED ALLOWABLE END BEARING SOIL PRESSURE: 1,000 PSF
ALLOWABLE LATERAL SOIL BEARING PRESSURE:
0 PSF/FT (GRADE TO -2'-0"); VALUES VARY PER BORING (BELOW -2'-0")
IN ACCORDANCE WITH THE 2009 EDITION OF THE INTERNATIONAL BUILDING CODE, CHAPTER 18.

DESIGN SOIL PARAMETERS ARE AS NOTED. ACTUAL ALLOWABLE SOIL PARAMETERS MUST BE VERIFIED ON SITE. REFERENCE SOILS AND FOUNDATION REPORT, NO. 17.080.NH, PREPARED BY MILLER ENGINEERING & TESTING, INC.; MANCHESTER, NH.

A GEOTECHNICAL ENGINEER OR REPRESENTATIVE OF IS RECOMMENDED (NOT REQUIRED) TO BE AVAILABLE AT THE TIME OF THE FOUNDATION INSTALLATION TO VERIFY THE SOIL DESIGN PARAMETERS AND TO PROVIDE ASSISTANCE IF ANY PROBLEMS ARISE IN FOUNDATION INSTALLATION.

ENCOUNTERING SOIL FORMATIONS THAT WILL REQUIRE SPECIAL DESIGN CONSIDERATIONS OR EXCAVATION PROCEDURES MAY OCCUR. POLE FOUNDATIONS WILL NEED TO BE ANALYZED ACCORDING TO THE SOIL CONDITIONS THAT EXIST. IF ANY DISCREPANCIES OR INCONSISTENCIES ARISE, NOTIFY THE ENGINEER OF SUCH DISCREPANCIES. FOUNDATIONS WILL THEN BE REVISED ACCORDINGLY. REVISIONS WILL BE ANALYZED PER RECOMMENDATIONS DIRECTED BY A REGISTERED ENGINEER.

ALL EXCAVATIONS MUST BE FREE OF LOOSE SOIL AND DEBRIS PRIOR TO FOUNDATION INSTALLATION AND CONCRETE BACKFILL PLACEMENT. TEMPORARY CASINGS OR DRILLERS SLURRY MAY BE USED TO STABILIZE THE EXCAVATION DURING INSTALLATION. CASINGS MUST BE REMOVED DURING CONCRETE BACKFILL PLACEMENT. CONCRETE BACKFILL MUST BE PLACED WITH A TREMIE WHEN SLURRY OR WATER IS PRESENT WITHIN THE EXCAVATION OR WHEN THE FREE DROP EXCEEDS 6'-0".

CONTRACTOR MUST BE FAMILIAR WITH THE COMPLETE SOIL INVESTIGATION REPORT AND BORINGS, AND CONTACT THE GEOTECHNICAL FIRM (IF NECESSARY) TO UNDERSTAND THE SOIL CONDITIONS AND THE POSSIBILITY OF GROUND WATER PUMPING AND EXCAVATION STABILIZATION OR BRACING DURING PRECAST BASE INSTALLATION AND PLACEMENT OF CONCRETE BACKFILL.

CONCRETE:
CONCRETE SHALL BE AIR-ENTRAINED AND HAVE A MINIMUM COMPRESSIVE DESIGN STRENGTH AT 28 DAYS OF 3,000 PSI. 3,000 PSI CONCRETE SPECIFIED FOR EARLY POLE ERECTION, ACTUAL REQUIRED MINIMUM ALLOWABLE CONCRETE STRENGTH IS 1,000 PSI. ALL PIERS AND CONCRETE BACKFILL MUST BEAR ON AND AGAINST FIRM UNDISTURBED SOIL.

GENERAL NOTES:
FIXTURES MUST BE LOCATED TO MAINTAIN 10'-0" MINIMUM HORIZONTAL CLEARANCE FROM ANY OBSTRUCTION. ENGINEER MUST BE NOTIFIED IF FOUNDATIONS ARE NEAR ANY RETAINING WALLS OR WITHIN / NEAR ANY SLOPES STEEPER THAN 3H : 1V. POLES, FIXTURES, PRECAST BASES, ELECTRICAL ITEMS AND INSTALLATION PER MUSCO LIGHTING.

COMMONWEALTH OF MASSACHUSETTS
KYLE G. LACINA
STRUCTURAL
No. 46148
REGISTERED PROFESSIONAL ENGINEER
6-26-17

ELSIE TURNER
FIELD LIGHTING
WALTHAM, MA

musco Lighting
CORPORATE: 100 1st AVE. WEST
OSKALOOSA, IA 52577
(800) 825-6020

STRUCTURAL ENGINEERS, P.C.
114 NICHOLAS DRIVE
MARSHALLTOWN, IOWA 50158
PHONE NUMBER: 641-752-8334
EMAIL: MSL.INFO@SBPC.BIZ

DRAWING TITLE: POLE AND FOUNDATION
SCALE: SEE PLAN
NOTES: SCAN #170743B

PROJECT NUMBER 170743
DATE 26 JUNE 2017
DRAWING NUMBER C1
OF ONE

USE OR REPRODUCTION OF THIS INFORMATION OTHER THAN ITS INTENDED PURPOSE FOR THIS PROJECT IS PROHIBITED WITHOUT WRITTEN CONSENT FROM MUSCO SPORTS LIGHTING, LLC.

1 FIELD LIGHTS FOUNDATION DETAILS
SCALE: N.T.S.

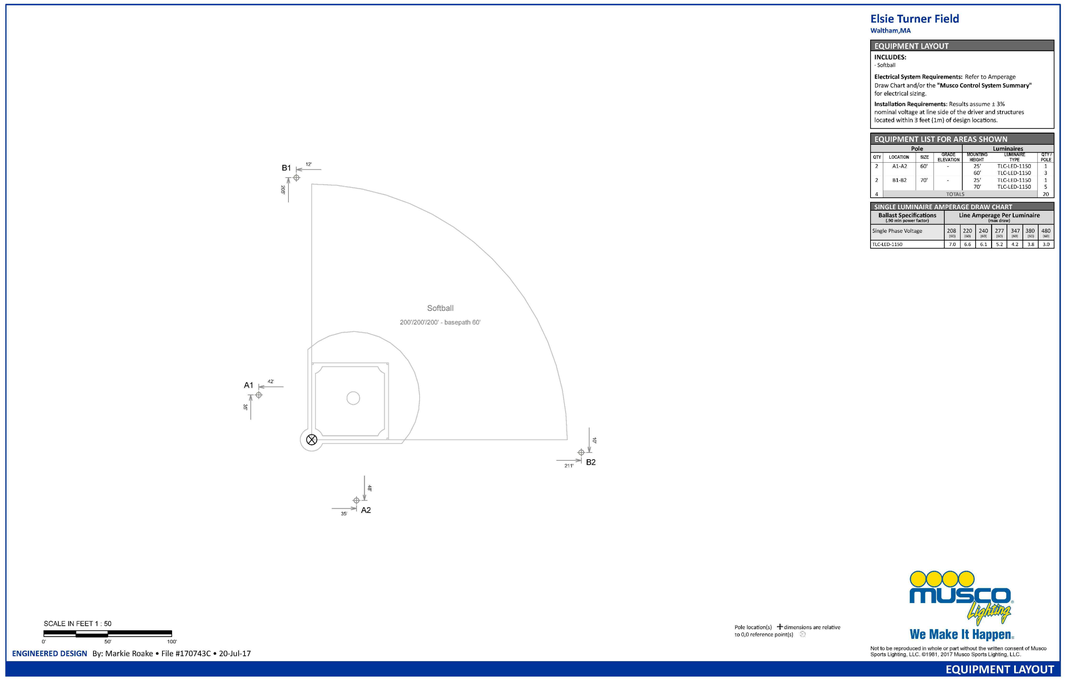

2 FIELD LIGHTS LAYOUT PLAN
SCALE: N.T.S.

REFER TO SPECIFICATIONS FOR SOIL BORING INFORMATION. MUSCO LIGHTS WERE USED AS THE BASIS OF DESIGN. EQUAL PRODUCTS WILL BE ACCEPTABLE IF THEY MEET THE LIGHTING SPECIFICATIONS. REFER TO SPECIFICATIONS SECTION 16526 EXTERIOR ATHLETIC LIGHTING.

Carolyn Cooney & Associates
Landscape Architecture / Planning
13 Elm Street, Milford, MA 01757
Telephone 508 478 8426, Facsimile 508 478 8607

No.	Description	Date

REVISIONS

Project:
CITY OF WALTHAM
ELSIE TURNER FIELD
421 TRAPELO ROAD
WALTHAM, MA 02452

Prepared For:
CITY OF WALTHAM
DEPARTMENT OF RECREATION
510 MOODY STREET
WALTHAM, MA 02453

TITLE:
FIELD LIGHTING
LAYOUT & DETAILS

Scale AS NOTED Date OCT. 31, 2017
Drawn By CCC
Checked By DRB
Approved By VH
Project No. 1710.00

DWG No. L.617

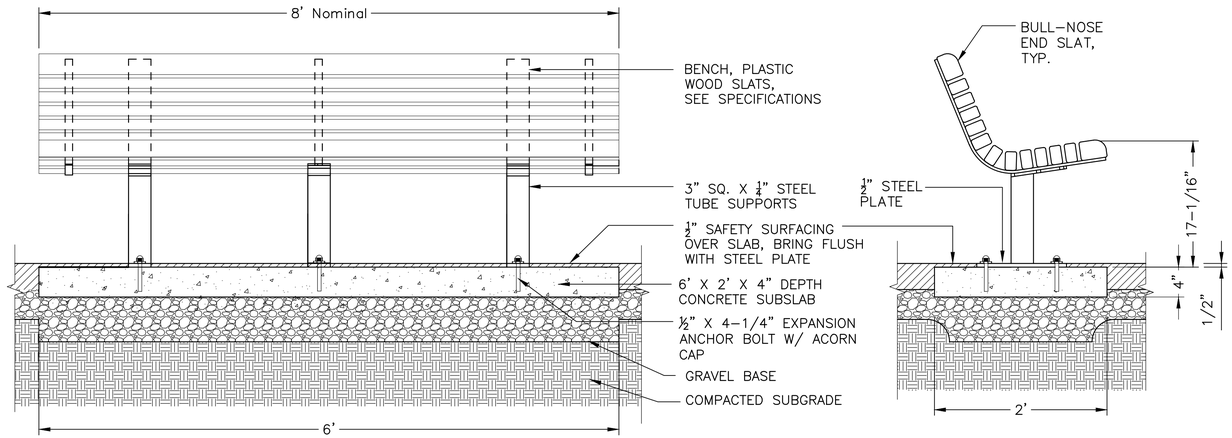

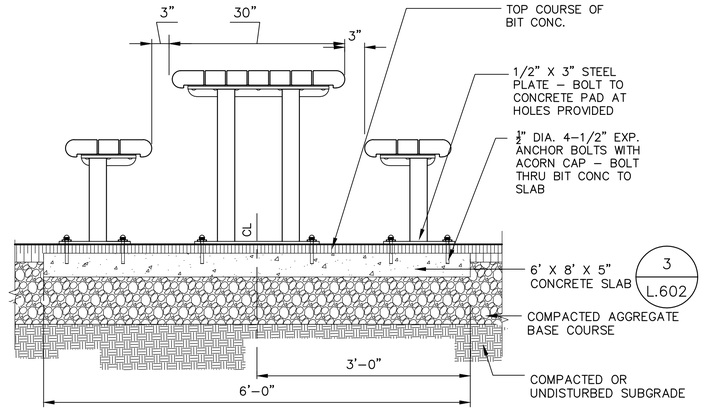

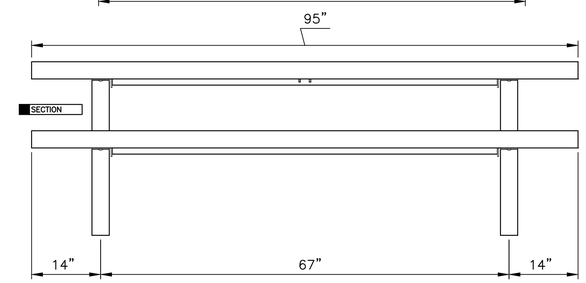

STANDARD 8'-0" PICNIC TABLE - TOTAL

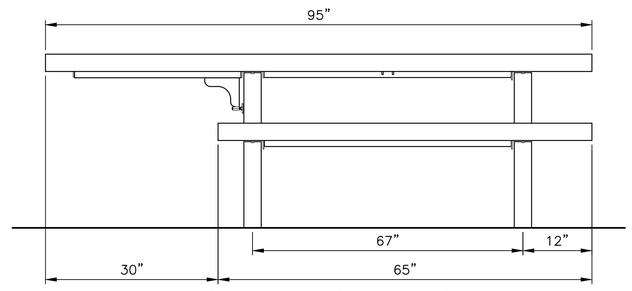

ADA COMPLIANT PICNIC TABLE - 1 TOTAL

3 PICNIC TABLES
SCALE: 1/2" = 1'-0"

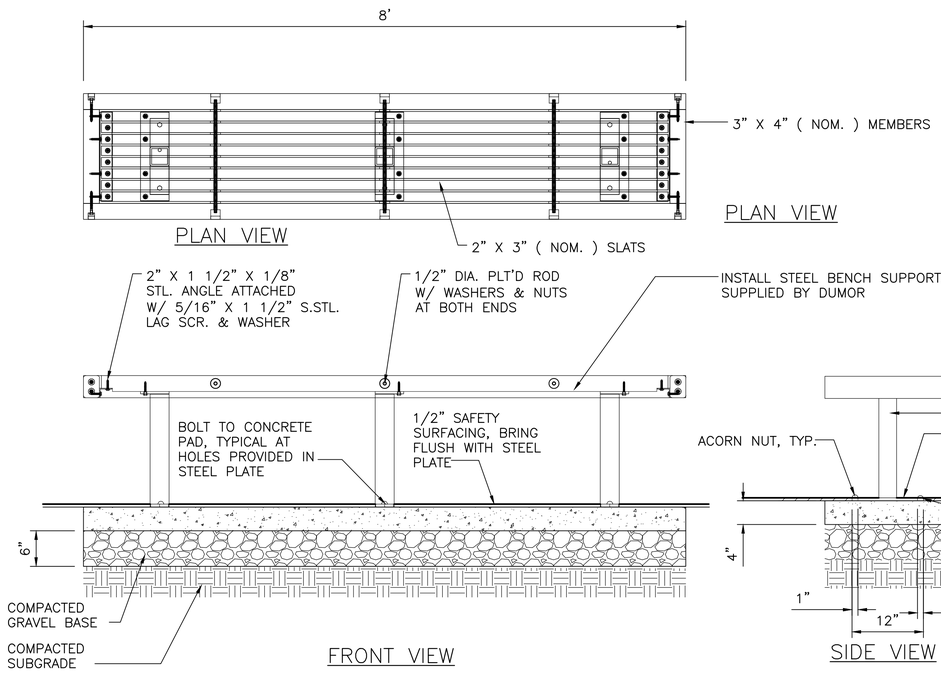

1 RECYCLED PLASTIC BENCHES AT PLAYGROUND AREA (3 BACKLESS/1 W BACK)
1" = 1'-0"

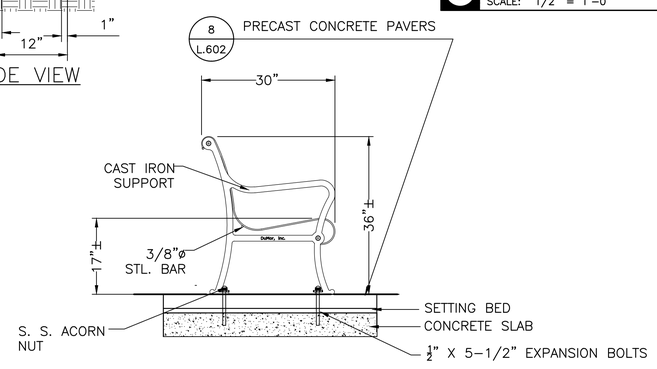

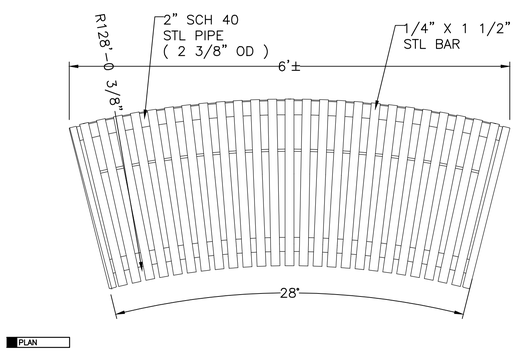

2 CURVED STEEL BENCH AT REST AREAS – 5 TOTAL
SCALE: N.T.S.

Carolyn Cooney & Associates
Landscape Architecture / Planning
13 Elm Street, Milford, MA 01757
Telephone 508 478 8426, Facsimile 508 478 8607

No.	Description	Date

REVISIONS

Project:

CITY OF WALTHAM
ELSIE TURNER FIELD
421 TRAPELO ROAD
WALTHAM, MA 02452

Prepared For:

CITY OF WALTHAM
DEPARTMENT OF RECREATION
510 MOODY STREET
WALTHAM, MA 02453

TITLE:

SITE FURNITURE DETAILS 1

Scale AS NOTED Date OCT. 31, 2017
Drawn By CCC
Checked By DRB
Approved By VH
Project No. 1710.00

DWG No. L.618

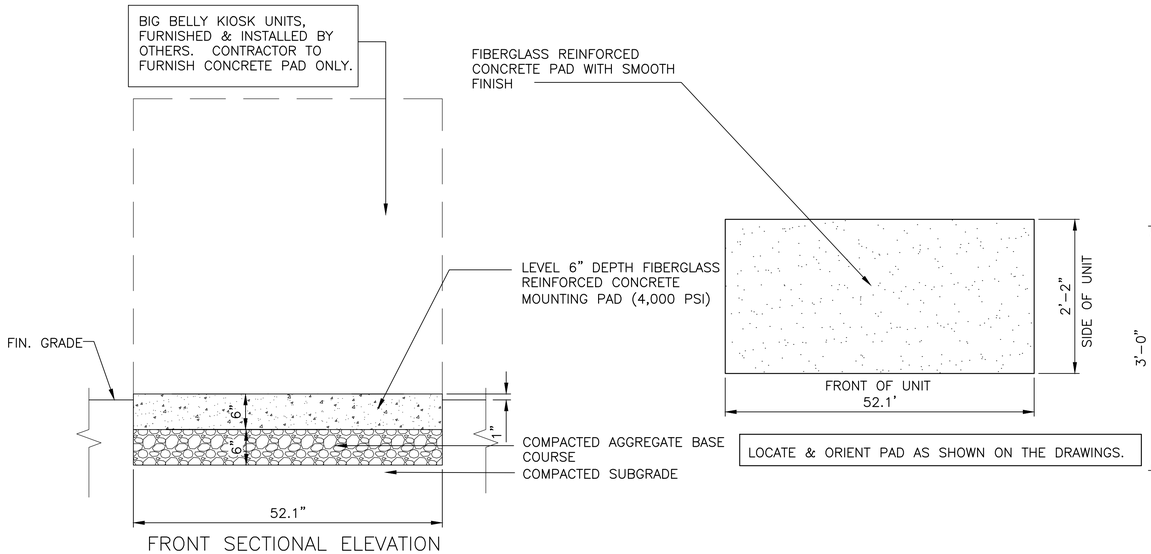

1 CONCRETE PADS FOR BIG BELLY KIOSKS – 2 TOTAL
1" = 1'-0"

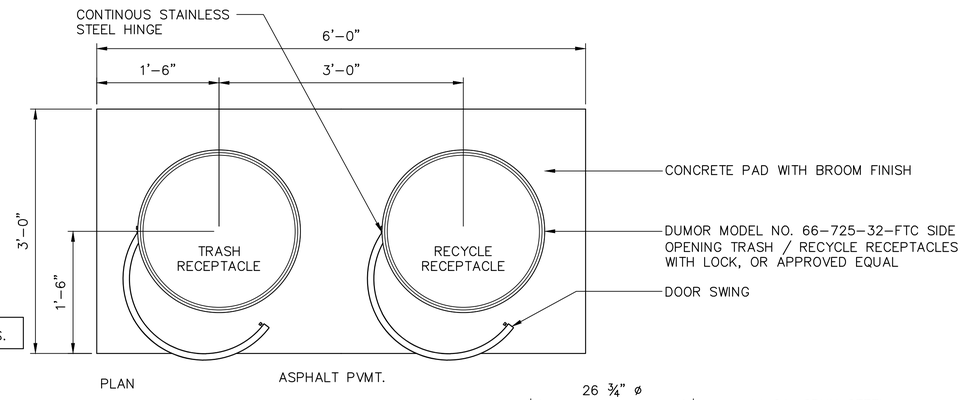

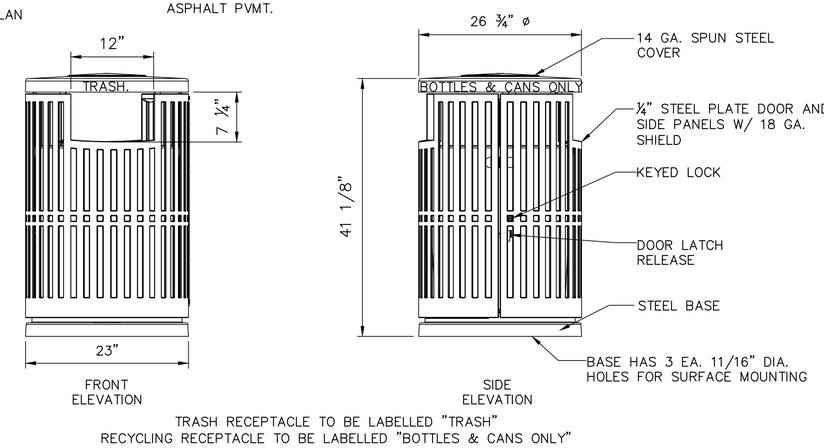

3 TRASH RECEPTACLES – 4 PAIRS TOTAL
NOT TO SCALE

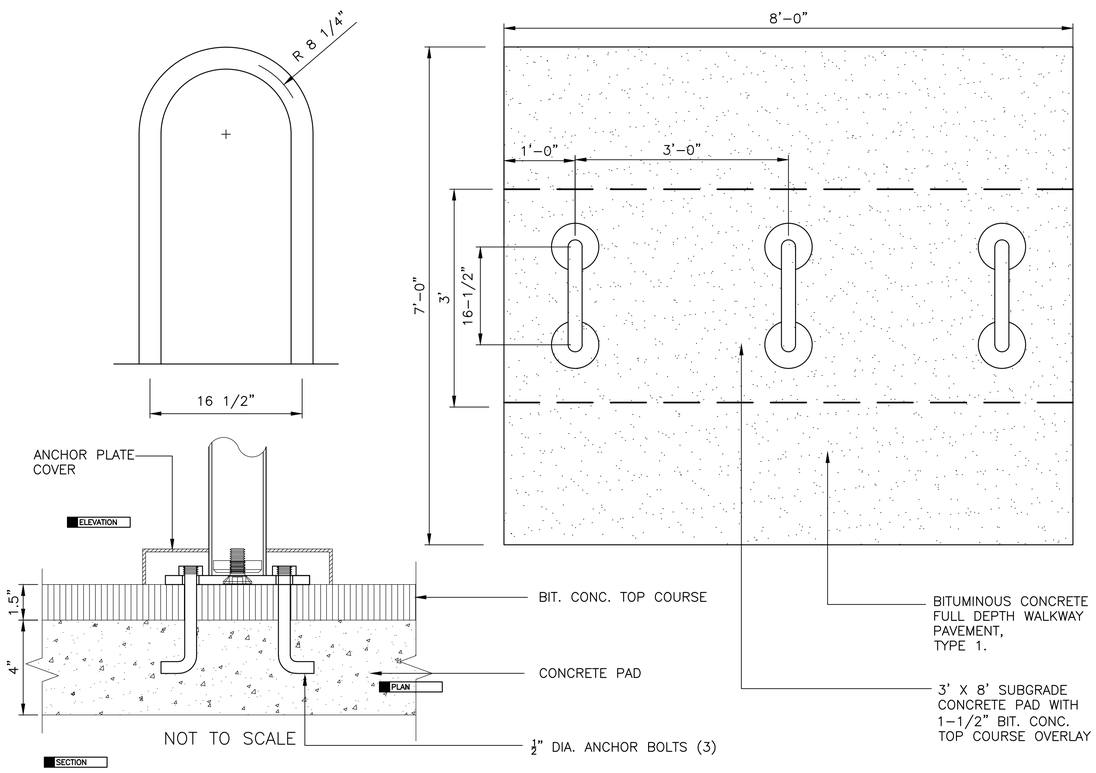

2 BIKE LOOPS – 3 LOOPS TOTAL
1" = 1'-0"

Carolyn Cooney & Associates
Landscape Architecture / Planning
13 Elm Street, Milford, MA 01757
Telephone 508 478 8426, Facsimile 508 478 8607

No.	Description	Date

REVISIONS

Project:

CITY OF WALTHAM
ELSIE TURNER FIELD
421 TRAPELO ROAD
WALTHAM, MA 02452

Prepared For:

CITY OF WALTHAM
DEPARTMENT OF RECREATION
510 MOODY STREET
WALTHAM, MA 02453

TITLE:

SITE FURNITURE DETAILS 2

Scale AS NOTED Date OCT. 31, 2017
Drawn By CCC
Checked By DRB
Approved By VH
Project No. 1710.00

DWG No. L.619

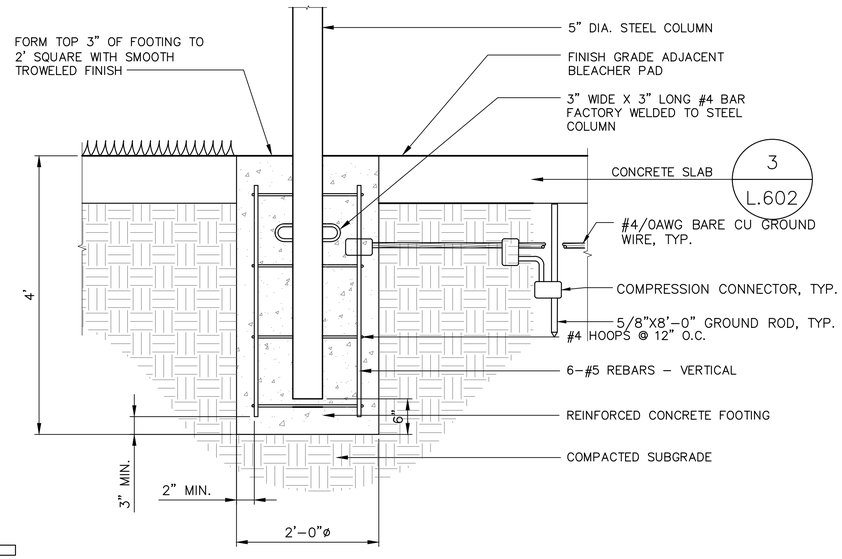

SECTION

1 FABRIC SHADE SHELTER – FOOTING DETAIL
1/2"=1'-0"

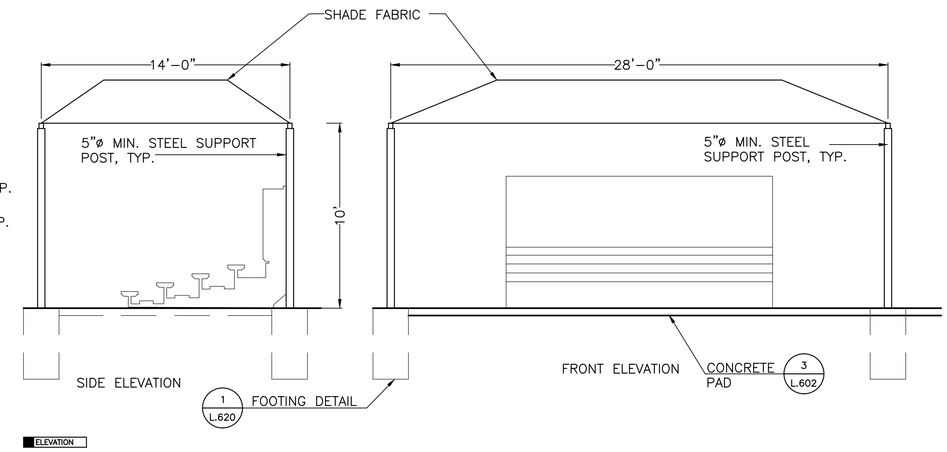

ELEVATION

2 FABRIC SHADE SHELTER AT BLEACHERS
SCALE 1/4"=1'-0"

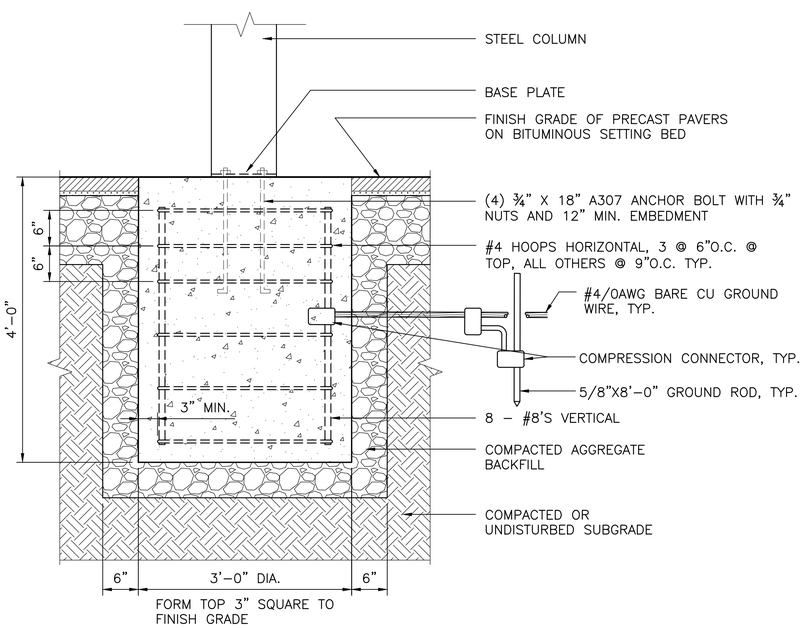

SECTION

3 METAL SHADE STRUCTURE FOOTING
SCALE 1"=1'=0"

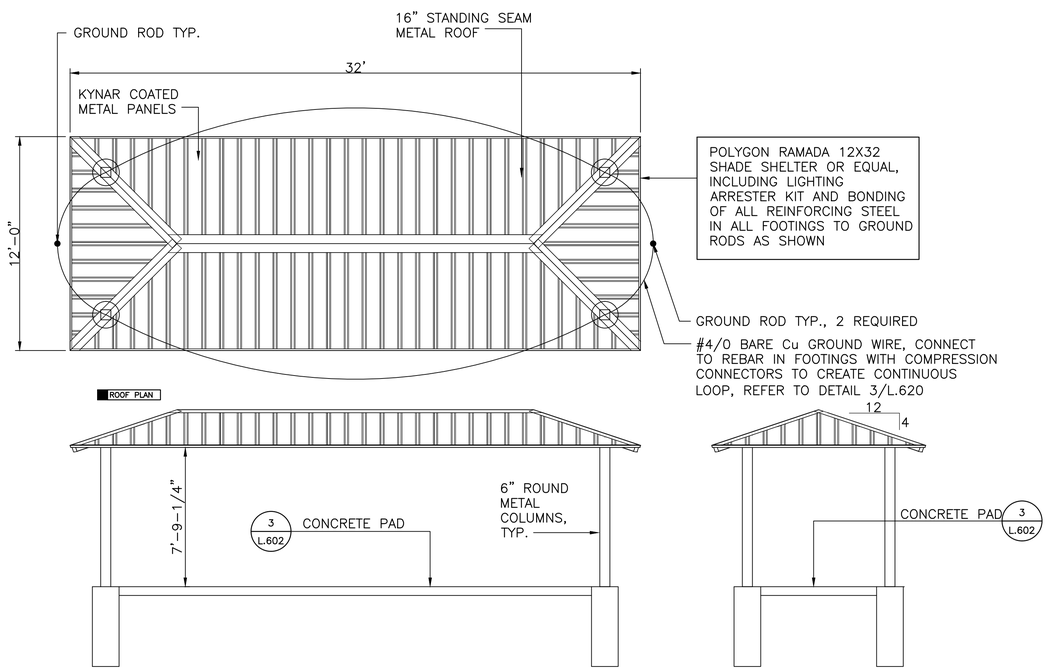

ELEVATION

4 METAL SHADE SHELTER
SCALE 1/4"=1'-0"

Carolyn Cooney & Associates
Landscape Architecture / Planning
13 Elm Street, Milford, MA 01757
Telephone 508 478 8426, Facsimile 508 478 8607

No.	Description	Date

REVISIONS

Project:

CITY OF WALTHAM
ELSIE TURNER FIELD
421 TRAPELO ROAD
WALTHAM, MA 02452

Prepared For:

CITY OF WALTHAM
DEPARTMENT OF RECREATION
510 MOODY STREET
WALTHAM, MA 02453

TITLE:

SHADE SHELTER DETAILS

Scale AS NOTED Date OCT. 31, 2017
Drawn By CCC
Checked By DRB
Approved By VH
Project No. 1710.00

DWG No. L.620

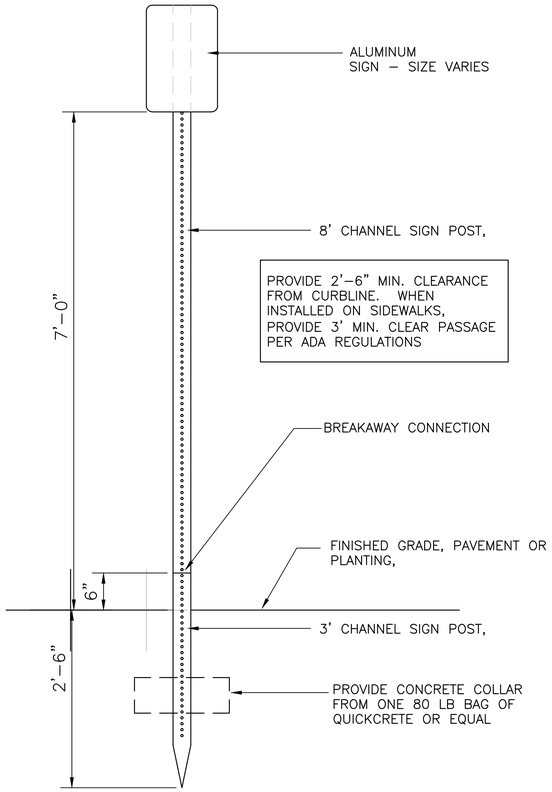

SECTION

1 TRAFFIC SIGNS
SCALE: 1/2" = 1'–0"

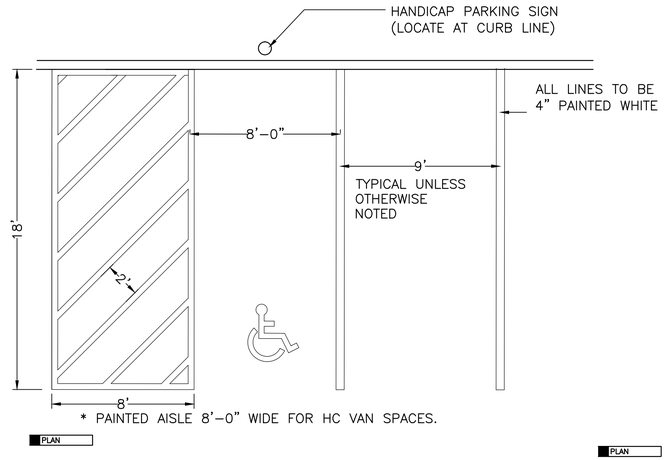

PLAN

4 PARKING LOT LINE PAINTING
SCALE: 1/4" = 1'–0"

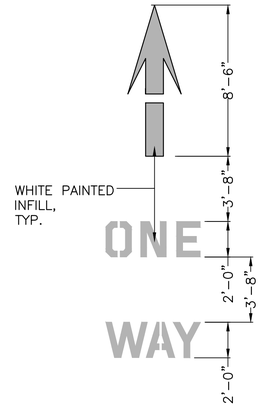

PLAN

3 ONE–WAY PAVEMENT MARKING
SCALE: 1/4" = 1'–0"

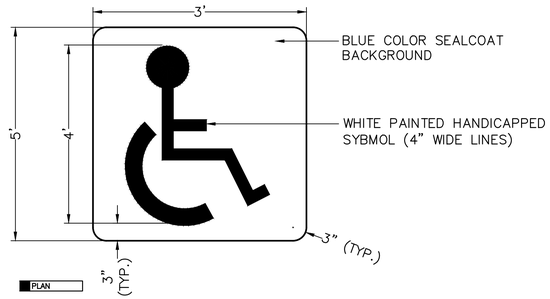

PLAN

2 HC SYMBOL
SCALE: 1" = 1'–0"

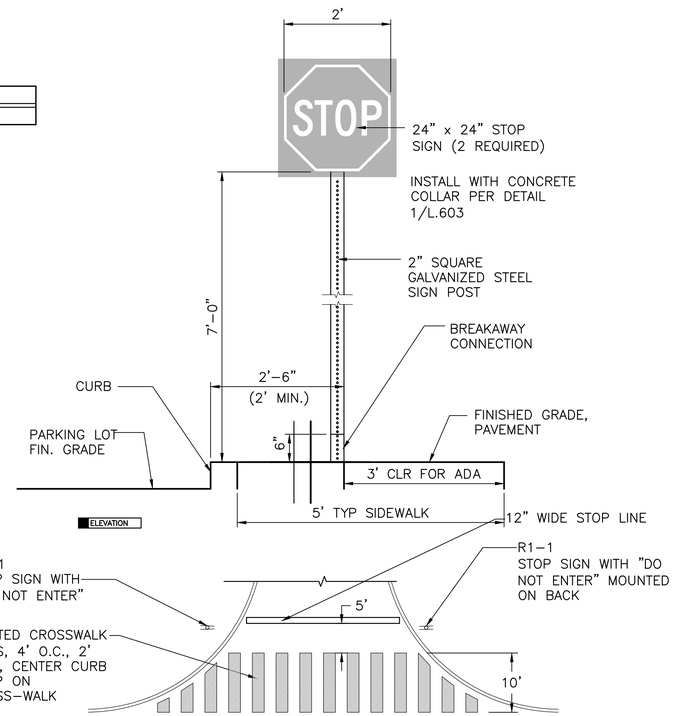

ELEVATION

PLAN

5 CROSSWALK/STOP SIGN DETAIL
SCALE: N.T.S.

2 "NO BUS PARKING" SIGNS TO BE LOCATED IN THE FIELD AS DIRECTED BY THE OWNER.

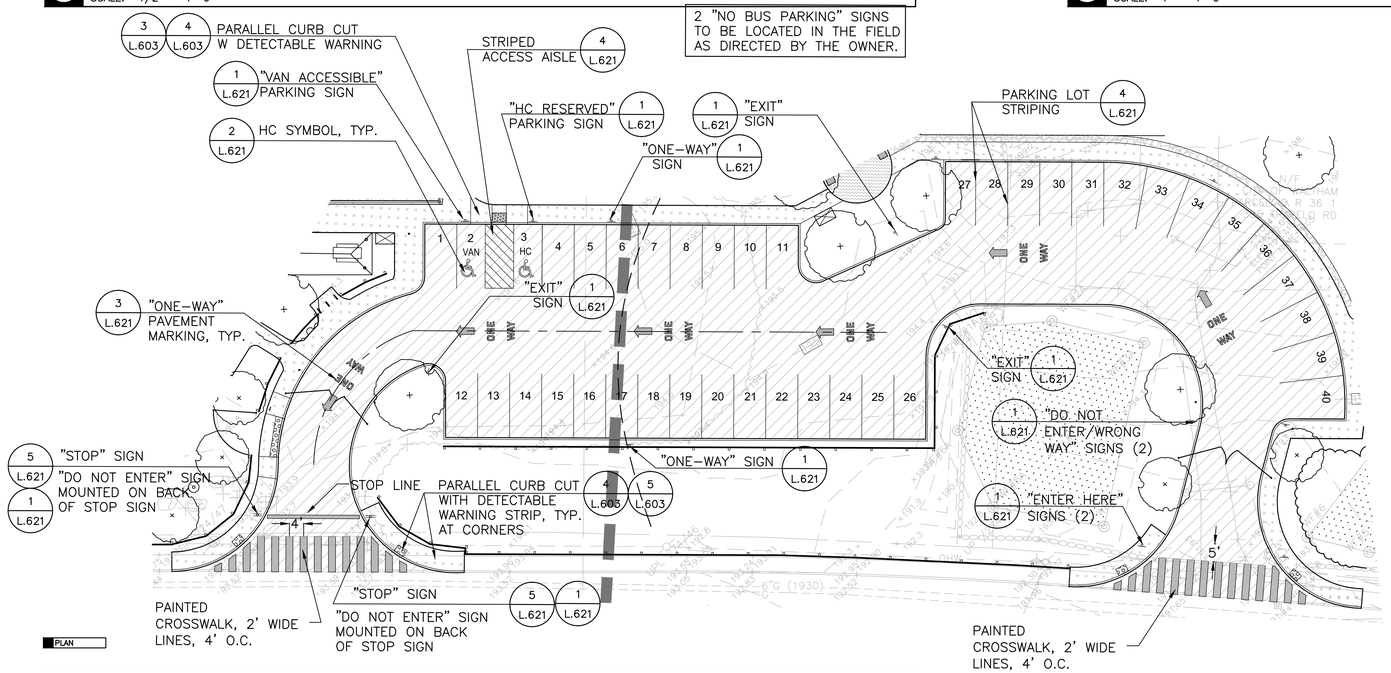

PLAN

4 PARKING LOT SIGNAGE AND PAVEMENT STRIPING
SCALE: 1" = 20'–0"

Carolyn Cooney & Associates
Landscape Architecture / Planning
13 Elm Street, Milford, MA 01757
Telephone 508 478 8426, Facsimile 508 478 8607

No.	Description	Date

REVISIONS

North

Project:

CITY OF WALTHAM
ELSIE TURNER FIELD
421 TRAPELO ROAD
WALTHAM, MA 02452

Prepared For:

CITY OF WALTHAM
DEPARTMENT OF RECREATION
510 MOODY STREET
WALTHAM, MA 02453

TITLE:

PARKING LOT SIGNAGE / STRIPING

Scale AS NOTED Date OCT. 31, 2017
Drawn By CCC
Checked By DRB
Approved By VH
Project No. 1710.00

DWG No. L.621

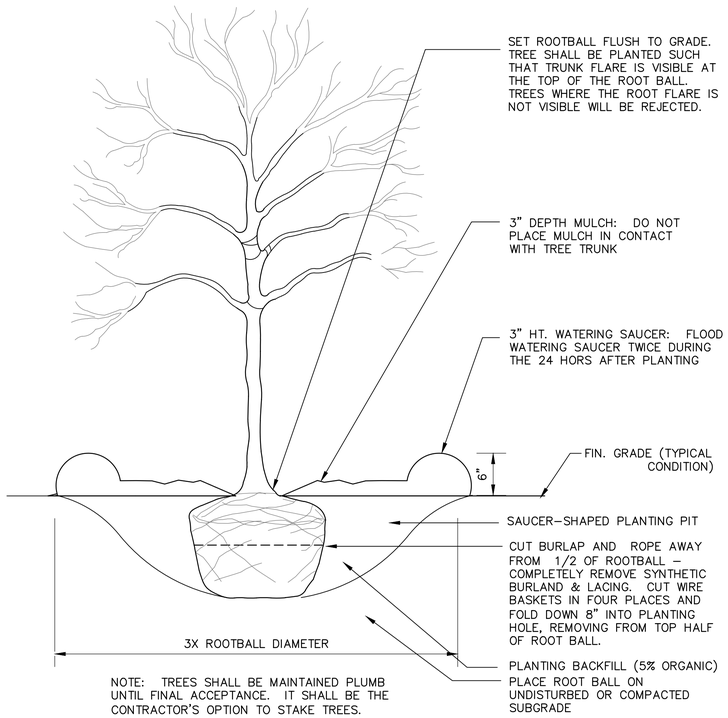

SECTION

1 DECIDUOUS TREE PLANTING DETAIL
N.T.S.

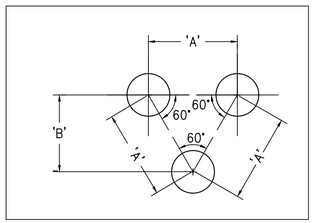

PLANT SPACING ('A')	ROW SPACING ('B')
6 IN. O.C.	5 IN. O.C.
8 IN. O.C.	7 IN. O.C.
10 IN. O.C.	8–1/2 IN. O.C.
12 IN. O.C.	10–1/2 IN. O.C.
15 IN. O.C.	13 IN. O.C.
18 IN. O.C.	16 IN. O.C.
24 IN. O.C.	21 IN. O.C.
30 IN. O.C.	26 IN. O.C.
36 IN. O.C.	30 IN. O.C.
48 IN. O.C.	42 IN. O.C.
54 IN. O.C.	48 IN. O.C.
60 IN. O.C.	54 IN. O.C.

4 SPACING CHART
SCALE: N.T.S.

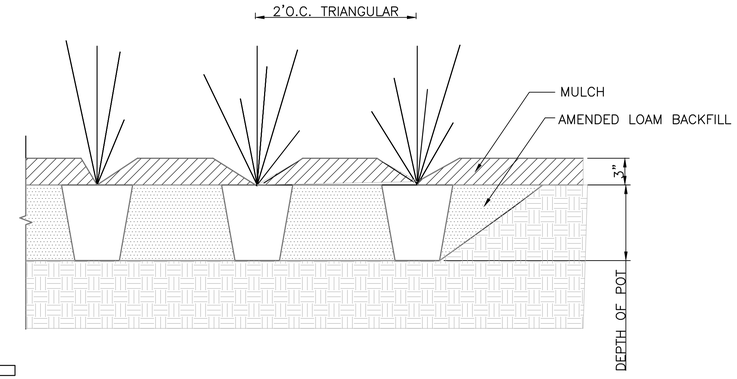

SECTION

2 CONTINUOUS PLANTING BED ABOVE PARKING LOT WALL
N.T.S.

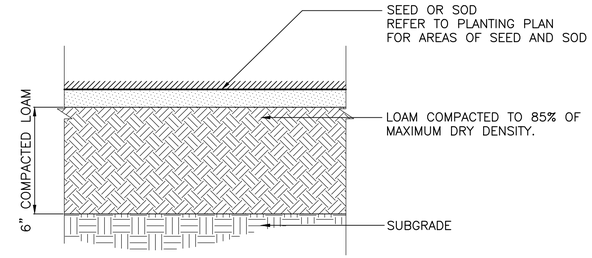

SECTION

3 SEEDING AND SODDING DETAIL
N.T.S.

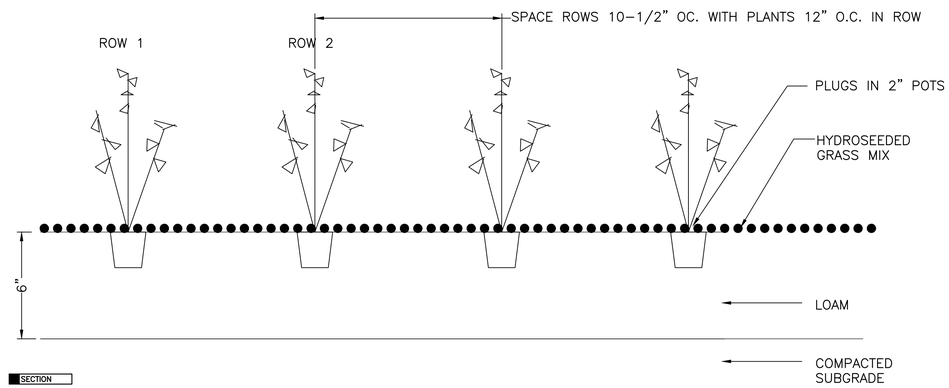

SECTION

5 PLUG PLANTING DETAIL AT BIORETENTION AREAS
N.T.S.

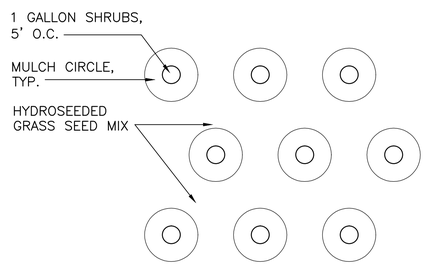

SECTION

6 SHRUB PLANTING ON BIORETENTION AREA SIDE–SLOPES
N.T.S.

Carolyn Cooney & Associates
Landscape Architecture / Planning
13 Elm Street, Milford, MA 01757
Telephone 508 478 8426, Facsimile 508 478 8607

No.	Description	Date

REVISIONS

Project:

CITY OF WALTHAM
ELSIE TURNER FIELD
421 TRAPELO ROAD
WALTHAM, MA 02452

Prepared For:

CITY OF WALTHAM
DEPARTMENT OF RECREATION
510 MOODY STREET
WALTHAM, MA 02453

TITLE:

PLANTING DETAILS

Scale AS NOTED Date OCT. 31, 2017
Drawn By CCC
Checked By DRB
Approved By VH
Project No. 1710.00

DWG No. L.622

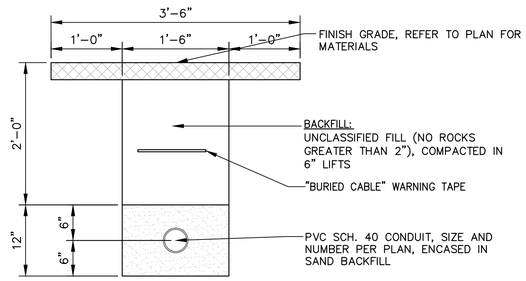

SECTION

3 PVC CONDUIT DUCTBANK CROSS-SECTION DETAIL, TYP.
N.T.S.

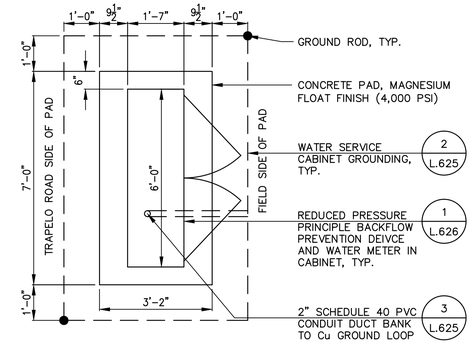

PLAN

1 COMMAND CENTER LAYOUT PLAN FOR IRRIGATION SYSTEM
1/2" = 1'-0"

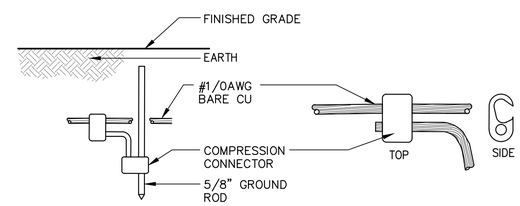

ROD TO CABLE CONNECTION

TAP CABLE CONNECTION

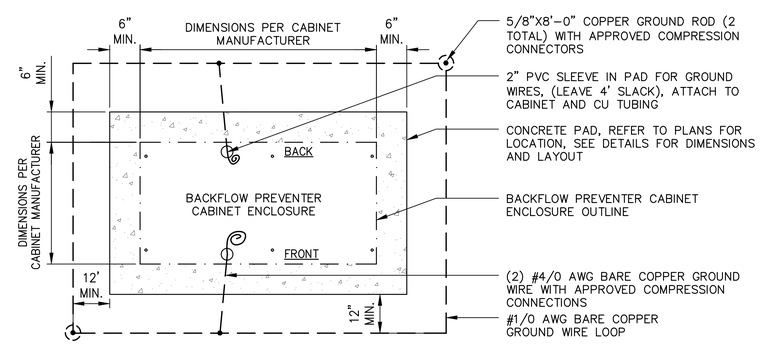

PLAN

2 WATER SERVICE CABINET GROUNDING PLAN
N.T.S.

Carolyn Cooney & Associates
Landscape Architecture / Planning
13 Elm Street, Milford, MA 01757
Telephone 508 478 8426, Facsimile 508 478 8607

No.	Description	Date

REVISIONS

Project:

CITY OF WALTHAM
ELSIE TURNER FIELD
421 TRAPELO ROAD
WALTHAM, MA 02452

Prepared For:

CITY OF WALTHAM
DEPARTMENT OF RECREATION
510 MOODY STREET
WALTHAM, MA 02453

TITLE:

IRRIGATION WATER SERVICE DETAILS

Scale AS NOTED Date OCT. 31, 2017
Drawn By CCC
Checked By DRB
Approved By VH
Project No. 1710.00

DWG No. L.625

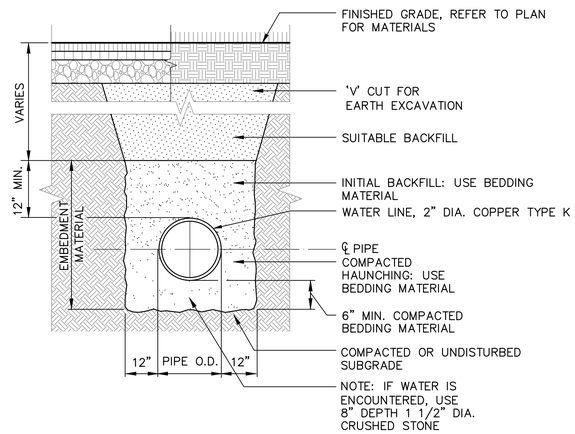

SECTION

3 WATER LINE TRENCH DETAIL

N.T.S.

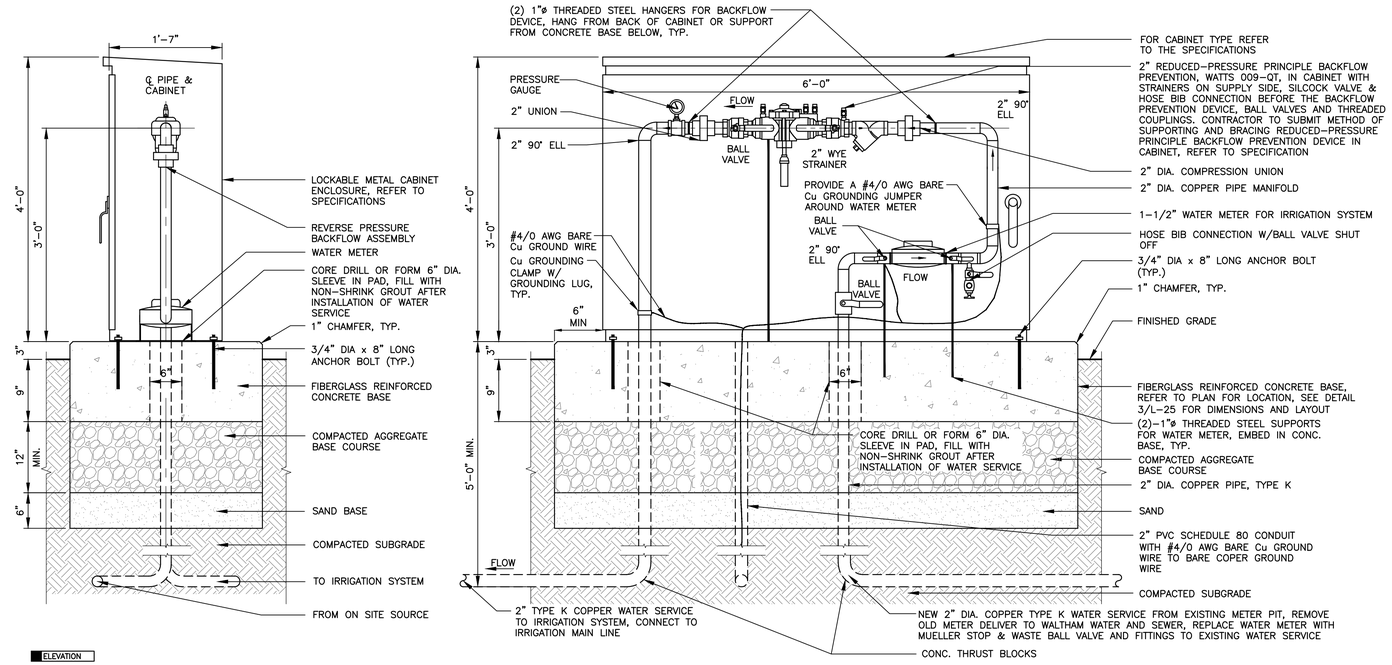

ELEVATION

1 REDUCED-PRESSURE PRINCIPLE BACKFLOW-PREVENTION DEVICE DETAIL, TYP.

N.T.S.

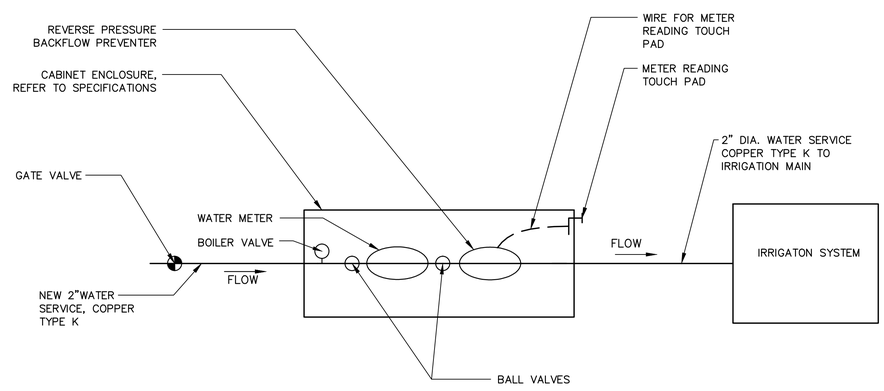

PLAN

2 WATER SERVICE ONE LINE SCHEMATIC DIAGRAM

N.T.S.

Carolyn Cooney & Associates

Landscape Architecture / Planning

13 Elm Street, Milford, MA 01757
Telephone 508 478 8426, Facsimile 508 478 8607

No.	Description	Date

REVISIONS

Project:

CITY OF WALTHAM
ELSIE TURNER FIELD
421 TRAPELO ROAD
WALTHAM, MA 02452

Prepared For:

CITY OF WALTHAM
DEPARTMENT OF RECREATION
510 MOODY STREET
WALTHAM, MA 02453

TITLE:

IRRIGATION WATER SERVICE DETAILS

Scale AS NOTED Date OCT. 31, 2017
Drawn By CCC
Checked By DRB
Approved By VH
Project No. 1710.00

DWG No. L.626

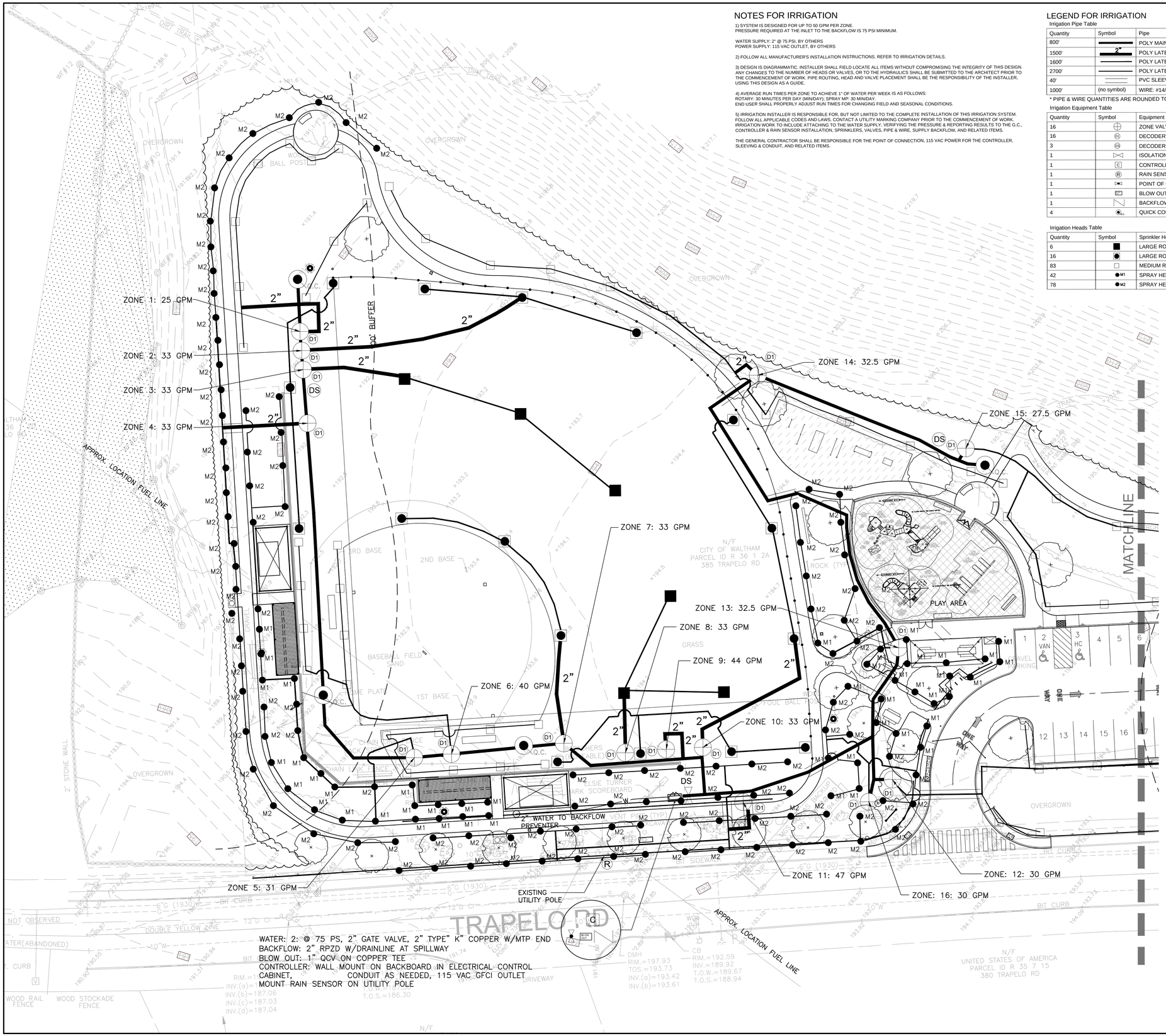

NOTES FOR IRRIGATION

1) SYSTEM IS DESIGNED FOR UP TO 50 GPM PER ZONE.
PRESSURE REQUIRED AT THE INLET TO THE BACKFLOW IS 75 PSI MINIMUM.

WATER SUPPLY: 2" @ 75 PSI, BY OTHERS
POWER SUPPLY: 115 VAC OUTLET, BY OTHERS

2) FOLLOW ALL MANUFACTURER'S INSTALLATION INSTRUCTIONS. REFER TO IRRIGATION DETAILS.

3) DESIGN IS DIAGRAMMATIC. INSTALLER SHALL FIELD LOCATE ALL ITEMS WITHOUT COMPROMISING THE INTEGRITY OF THIS DESIGN. ANY CHANGES TO THE NUMBER OF HEADS OR VALVES, OR TO THE HYDRAULICS SHALL BE SUBMITTED TO THE ARCHITECT PRIOR TO THE COMMENCEMENT OF WORK. PIPE ROUTING, HEAD AND VALVE PLACEMENT SHALL BE THE RESPONSIBILITY OF THE INSTALLER, USING THIS DESIGN AS A GUIDE.

4) AVERAGE RUN TIMES PER ZONE TO ACHIEVE 1" OF WATER PER WEEK IS AS FOLLOWS:
ROTARY: 30 MINUTES PER DAY (MIN/DAY); SPRAY MP: 30 MIN/DAY.
END USER SHALL PROPERLY ADJUST RUN TIMES FOR CHANGING FIELD AND SEASONAL CONDITIONS.

5) IRRIGATION INSTALLER IS RESPONSIBLE FOR, BUT NOT LIMITED TO THE COMPLETE INSTALLATION OF THIS IRRIGATION SYSTEM. FOLLOW ALL APPLICABLE CODES AND LAWS. CONTACT A UTILITY MARKING COMPANY PRIOR TO THE COMMENCEMENT OF WORK. IRRIGATION WORK TO INCLUDE ATTACHING TO THE WATER SUPPLY, VERIFYING THE PRESSURE & REPORTING RESULTS TO THE G.C., CONTROLLER & RAIN SENSOR INSTALLATION, SPRINKLERS, VALVES, PIPE & WIRE, SUPPLY BACKFLOW, AND RELATED ITEMS.

THE GENERAL CONTRACTOR SHALL BE RESPONSIBLE FOR THE POINT OF CONNECTION, 115 VAC POWER FOR THE CONTROLLER, SLEEVING & CONDUIT, AND RELATED ITEMS.

LEGEND FOR IRRIGATION

Irrigation Pipe Table

Quantity	Symbol	Pipe
800'		POLY MAIN: 100 PSI 2" POLY PIPE
1500'	2"	POLY LATERALS: 100 PSI 2" POLY PIPE
1600'		POLY LATERALS: 100 PSI 1 1/2" POLY PIPE
2700'		POLY LATERALS: 100 PSI 1" POLY PIPE
40'		PVC SLEEVES: CLASS 200 4" PVC PIPE
1000'	(no symbol)	WIRE: #14/2 UF, GROUND EVERY 500'

* PIPE & WIRE QUANTITIES ARE ROUNDED TO THE NEAREST ROLL OR LENGTH.

Irrigation Equipment Table

Quantity	Symbol	Equipment
16		ZONE VALVE: HUNTER PGV-151G 1 1/2" W/ GATE VALVE & DECODER
16	D1	DECODER: HUNTER DUAL-1 1 STATION
3	D8	DECODER: HUNTER DUAL-S W/ 8' GROUND ROD
1		ISOLATION VALVES: BRASS GATE VALVE, LINE SIZED
1	C	CONTROLLER: HUNTER IC-600M W/ DUAL-48M MODULE
1	R	RAIN SENSOR: HUNTER RAINCLIK
1		POINT OF CONNECTION: 2" @ 75 PSI. INSTALL SHUT OFF W/ DRAIN.
1		BLOW OUT: TEE CONNECTION
1		BACKFLOW: 2" RPZD W/ DRAIN ON 2" COPPER PIPE
4		QUICK COUPLER VALVE: HUNTER 1" HQ-44 W/ HK-44 KEY

Irrigation Heads Table

Quantity	Symbol	Sprinkler Heads
6		LARGE ROTARY SPRINKLER: HUNTER I-25-04-SS-10
16		LARGE ROTARY SPRINKLER: HUNTER I-25-04-SS-10
83		MEDIUM ROTARY SPRINKLER: HUNTER I-20-04-SS-2.5
42	M1	SPRAY HEAD: HUNTER PROS-04-PRS40-CV, MP1000 NOZZLE
78	M2	SPRAY HEAD: HUNTER PROS-04-PRS40-CV, MP2000 NOZZLE

Carolyn Cooney & Associates
Landscape Architecture / Planning
13 Elm Street, Milford, MA 01757
Telephone 508 478 8426, Facsimile 508 478 8607

No.	Description	Date

REVISIONS

North

Project:

CITY OF WALTHAM
ELSIE TURNER FIELD
421 TRAPELO ROAD
WALTHAM, MA 02452

Prepared For:

CITY OF WALTHAM
DEPARTMENT OF RECREATION
510 MOODY STREET
WALTHAM, MA 02453

TITLE:

IRRIGATION PLAN

Scale	1"=20'	Date	OCT. 31, 2017
Drawn By	CCC		
Checked By	DRB		
Approved By	CCC		
Project No.	1710.00		

DWG No. L.701

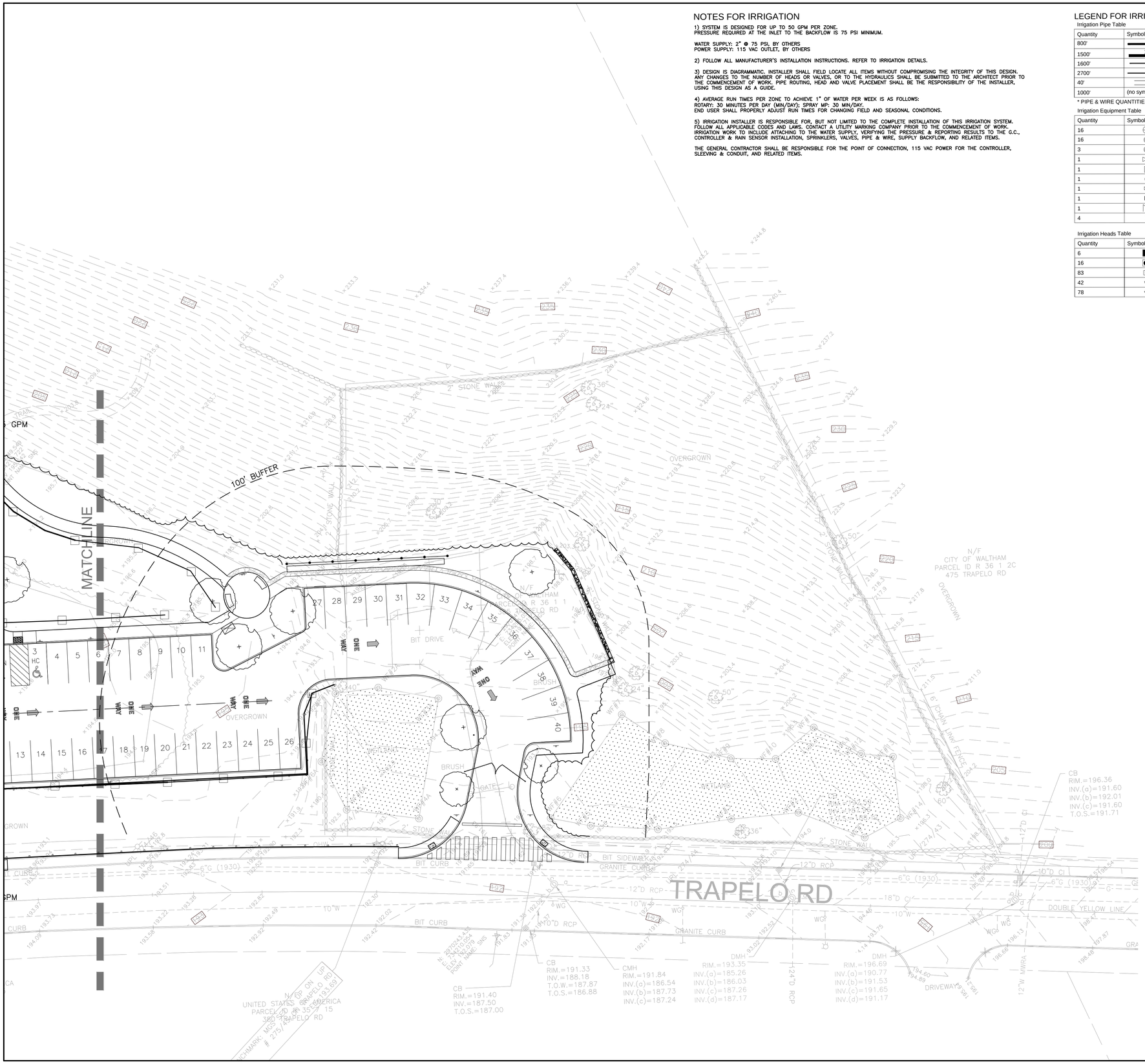

NOTES FOR IRRIGATION

1) SYSTEM IS DESIGNED FOR UP TO 50 GPM PER ZONE.
PRESSURE REQUIRED AT THE INLET TO THE BACKFLOW IS 75 PSI MINIMUM.

WATER SUPPLY: 2" @ 75 PSI, BY OTHERS
POWER SUPPLY: 115 VAC OUTLET, BY OTHERS

2) FOLLOW ALL MANUFACTURER'S INSTALLATION INSTRUCTIONS. REFER TO IRRIGATION DETAILS.

3) DESIGN IS DIAGRAMMATIC. INSTALLER SHALL FIELD LOCATE ALL ITEMS WITHOUT COMPROMISING THE INTEGRITY OF THIS DESIGN. ANY CHANGES TO THE NUMBER OF HEADS OR VALVES, OR TO THE HYDRAULICS SHALL BE SUBMITTED TO THE ARCHITECT PRIOR TO THE COMMENCEMENT OF WORK. PIPE ROUTING, HEAD AND VALVE PLACEMENT SHALL BE THE RESPONSIBILITY OF THE INSTALLER, USING THIS DESIGN AS A GUIDE.

4) AVERAGE RUN TIMES PER ZONE TO ACHIEVE 1" OF WATER PER WEEK IS AS FOLLOWS:
ROTARY: 30 MINUTES PER DAY (MIN/DAY); SPRAY MP: 30 MIN/DAY.
END USER SHALL PROPERLY ADJUST RUN TIMES FOR CHANGING FIELD AND SEASONAL CONDITIONS.

5) IRRIGATION INSTALLER IS RESPONSIBLE FOR, BUT NOT LIMITED TO THE COMPLETE INSTALLATION OF THIS IRRIGATION SYSTEM. FOLLOW ALL APPLICABLE CODES AND LAWS. CONTACT A UTILITY MARKING COMPANY PRIOR TO THE COMMENCEMENT OF WORK. IRRIGATION WORK TO INCLUDE ATTACHING TO THE WATER SUPPLY, VERIFYING THE PRESSURE & REPORTING RESULTS TO THE G.C., CONTROLLER & RAIN SENSOR INSTALLATION, SPRINKLERS, VALVES, PIPE & WIRE, SUPPLY BACKFLOW, AND RELATED ITEMS.

THE GENERAL CONTRACTOR SHALL BE RESPONSIBLE FOR THE POINT OF CONNECTION, 115 VAC POWER FOR THE CONTROLLER, SLEEVING & CONDUIT, AND RELATED ITEMS.

LEGEND FOR IRRIGATION

Irrigation Pipe Table

Quantity	Symbol	Pipe
800'		POLYMAIN: 100 PSI 2" POLY PIPE
1500'	2"	POLY LATERALS: 100 PSI 2" POLY PIPE
1600'		POLY LATERALS: 100 PSI 1 1/2" POLY PIPE
2700'		POLY LATERALS: 100 PSI 1" POLY PIPE
40'		PVC SLEEVES: CLASS 200 4" PVC PIPE
1000'	(no symbol)	WIRE: #14/2 UF, GROUND EVERY 500'

* PIPE & WIRE QUANTITIES ARE ROUNDED TO THE NEAREST ROLL OR LENGTH.

Irrigation Equipment Table

Quantity	Symbol	Equipment
16		ZONE VALVE: HUNTER PGV-151G 1 1/2" W/ GATE VALVE & DECODER
16	D1	DECODER: HUNTER DUAL-1 1 STATION
3	D8	DECODER: HUNTER DUAL-S W/ 8' GROUND ROD
1		ISOLATION VALVES: BRASS GATE VALVE, LINE SIZED
1	C	CONTROLLER: HUNTER IC-600M W/ DUAL-48M MODULE
1	R	RAIN SENSOR: HUNTER RAINCLIK
1		POINT OF CONNECTION: 2" @ 75 PSI. INSTALL SHUT OFF W/ DRAIN.
1		BLOW OUT: TEE CONNECTION
1		BACKFLOW: 2" RPZD W/ DRAIN ON 2" COPPER PIPE
4	QC	QUICK COUPLER VALVE: HUNTER 1" HQ-44 W/ HK-44 KEY

Irrigation Heads Table

Quantity	Symbol	Sprinkler Heads
6		LARGE ROTARY SPRINKLER: HUNTER I-25-04-SS-10
16		LARGE ROTARY SPRINKLER: HUNTER I-25-04-SS-10
83		MEDIUM ROTARY SPRINKLER: HUNTER I-20-04-SS-2.5
42	M1	SPRAY HEAD: HUNTER PROS-04-PRS40-CV, MP1000 NOZZLE
78	M2	SPRAY HEAD: HUNTER PROS-04-PRS40-CV, MP2000 NOZZLE

Carolyn Cooney & Associates
Landscape Architecture / Planning
13 Elm Street, Milford, MA 01757
Telephone 508 478 8426, Facsimile 508 478 8607

No.	Description	Date

REVISIONS

North

Project:

CITY OF WALTHAM
ELSIE TURNER FIELD
421 TRAPELO ROAD
WALTHAM, MA 02452

Prepared For:

CITY OF WALTHAM
DEPARTMENT OF RECREATION
510 MOODY STREET
WALTHAM, MA 02453

TITLE:

IRRIGATION PLAN

Scale 1"=20' Date OCT. 31, 2017
Drawn By CCC
Checked By DRB
Approved By CCC
Project No. 1710.00

DWG No. L.702

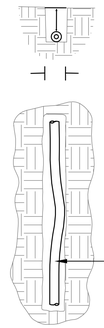

NOTE:

ALL OF THE PIPE DEPTHS ARE BASED ON THE INDIVIDUAL PIPE SIZES. REFER TO THE SPECIFICATIONS FOR THE MINIMUM DEPTH OF COVER FOR EACH SIZE OF PIPE.

SECTION

1 TRENCH DETAIL, TYP.
N.T.S.

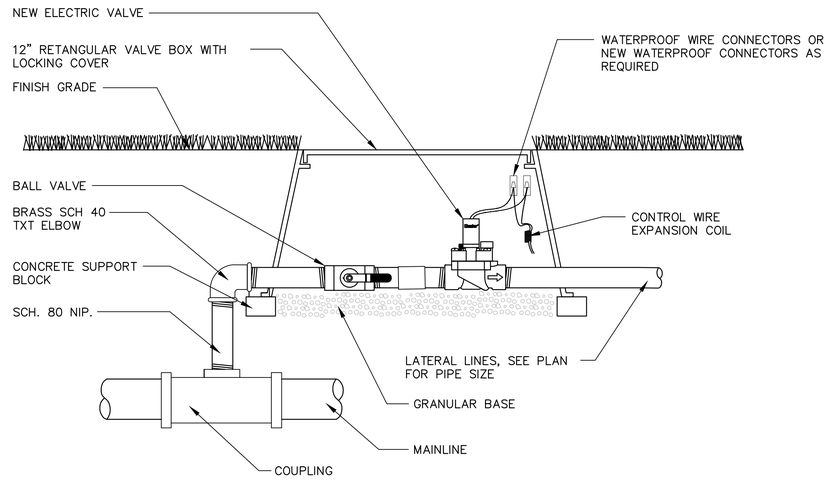

SECTION

4 AUTOMATIC CONTROL VALVE DETAIL, TYP.
N.T.S.

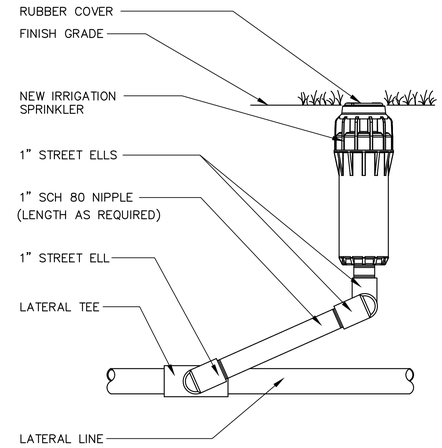

SECTION

7 GEAR DRIVEN ROTARY IRRIGATION SPRINKLER INSTALLATION DETAIL, TYP.
N.T.S.

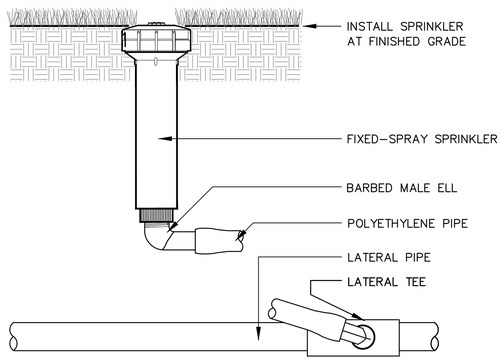

SECTION

2 SPRAY SPRINKLER DETAIL, TYP.
N.T.S.

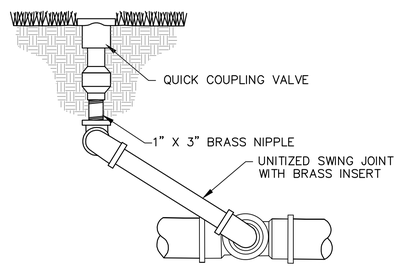

SECTION

5 QUICK COUPLING VALVE DETAIL, TYP.
N.T.S.

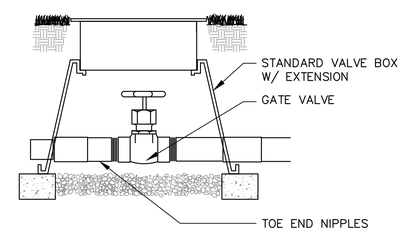

SECTION

8 SHUT OFF DETAIL, TYP.
N.T.S.

PROVIDE THRUST BLOCKS AT ALL CHANGES IN SIZE OR DIRECTION, ELBOWS, REDUCERS, PLUGS, VALVES, AND THE OPPOSITE SIDE OF TEE BRANCHES.

THE SIZES OF THE BLOCK IS DETERMINED BY THE WORKING PRESSURE, THE SIZE AND TYPE OF FITTING, AND SOIL CONDITIONS AT THE JOB SITE. TO CALCULATE THE AREA OF CONTACT WITH THE SOIL, FOLLOW THESE STEPS:

– CALCULATE THE THRUST BY SELECTING THE VALVE BY SIZE AND TYPE OF FITTING (TABLE 1), AND MULTIPLING THAT VALUE BY THE MAXIMUM WORKING PRESSURE AT THE FITTING.

– DIVIDE THE TOTAL THRUST BY BEARING CAPACITY OF THE SOIL IN EXCAVATION (TABLE 2).

– THE RESULT IS THE TOTAL AREA (IN SQUARE FEET) OF THRUST BLOCK REQUIRED TO BE IN CONTACT WITH THE UNDISTURBED SOIL OF THE TRENCH WALL.

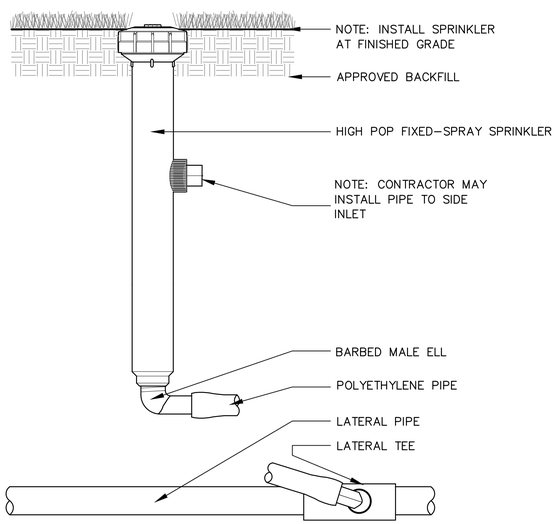

SECTION

3 12" HP SHRUB STREAM SPRAY SPRINKLER DETAIL, TYP.
N.T.S.

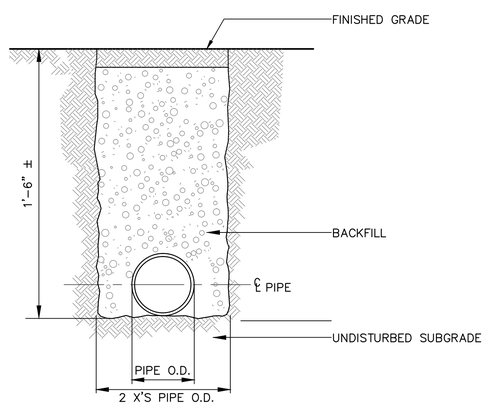

PLAN

6 PE MAINLINE TRENCH SECTION DETAIL, TYP.
N.T.S.

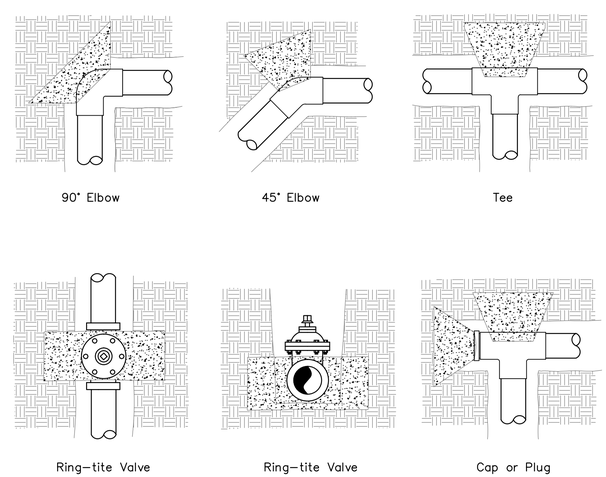

SECTION

9 THRUST BLOCKING DETAIL, TYP.
N.T.S.

Table 1
Fitting Thrust Factors

Size	Tee,Cap or Valve	90° Elbow	45° Elbow	22.5° Elbow
1 1/2	2.94	4.16	2.25	1.15
2	4.56	6.45	3.50	1.78
2 1/2	6.65	9.40	5.10	2.60
3	9.80	13.90	7.51	3.82
4	16.20	23.00	12.40	6.31
6	34.80	49.20	26.70	13.60
8	59.00	83.50	45.20	23.00
10	91.50	130.00	70.00	35.80
12	129.00	182.00	98.50	50.30

Table 2
Soil Bearing Loads

SOIL TYPE	SAFE BEARING LOAD LBS PER SQ FT
Muck, peat, etc.	0
Soft Clay	500
Medium Clay	1,000
Sand	1,000
Sand & Gravel	1,500
Compact Sand	3,000
Sand & Gravel cemented w/Clay	4,000
Hard Pan Clay	5,000
Sound Shale	10,000

Carolyn Cooney & Associates
Landscape Architecture / Planning
13 Elm Street, Milford, MA 01757
Telephone 508 478 8426, Facsimile 508 478 8607

No.	Description	Date

REVISIONS

Project:

CITY OF WALTHAM
ELSIE TURNER FIELD
421 TRAPELO ROAD
WALTHAM, MA 02452

Prepared For:

CITY OF WALTHAM
DEPARTMENT OF RECREATION
510 MOODY STREET
WALTHAM, MA 02453

TITLE:

IRRIGATION DETAILS

Scale AS NOTED Date OCT. 31, 2017
Drawn By DRB
Checked By MJB
Approved By VH
Project No. 1710.00

DWG No. L.703

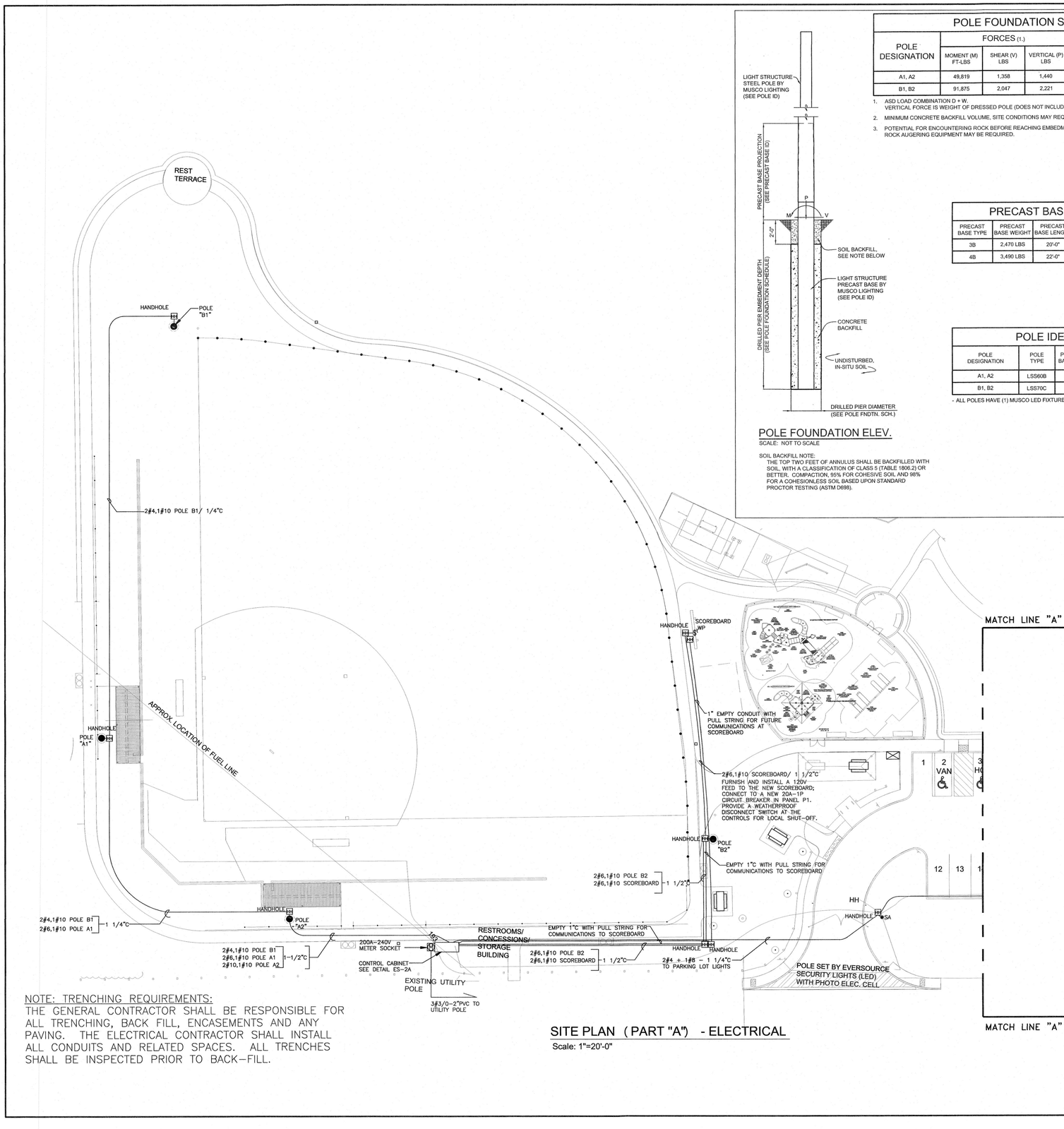

NOTE: TRENCHING REQUIREMENTS:
THE GENERAL CONTRACTOR SHALL BE RESPONSIBLE FOR ALL TRENCHING, BACK FILL, ENCASEMENTS AND ANY PAVING. THE ELECTRICAL CONTRACTOR SHALL INSTALL ALL CONDUITS AND RELATED SPACES. ALL TRENCHES SHALL BE INSPECTED PRIOR TO BACK-FILL.

SITE PLAN (PART "A") - ELECTRICAL

Scale: 1"=20'-0"

POLE FOUNDATION ELEV.

SCALE: NOT TO SCALE

SOIL BACKFILL NOTE:
THE TOP TWO FEET OF ANNULUS SHALL BE BACKFILLED WITH SOIL, WITH A CLASSIFICATION OF CLASS 5 (TABLE 1806.2) OR BETTER. COMPACTION, 95% FOR COHESIVE SOIL AND 98% FOR A COHESIONLESS SOIL BASED UPON STANDARD PROCTOR TESTING (ASTM D698).

POLE FOUNDATION SCHEDULE

POLE DESIGNATION	FORCES (1.)			DRILLED PIER		
	MOMENT (M) FT-LBS	SHEAR (V) LBS	VERTICAL (P) LBS	DIAMETER INCHES	EMBEDMENT DEPTH	CONCRETE BACKFILL YD³ (2.)
A1, A2	49,819	1,358	1,440	48	12'-0"	4.3
B1, B2	91,875	2,047	2,221	48	14'-0"	5.0

1. ASD LOAD COMBINATION D + W.
   VERTICAL FORCE IS WEIGHT OF DRESSED POLE (DOES NOT INCLUDE PRECAST BASE WEIGHT).
2. MINIMUM CONCRETE BACKFILL VOLUME, SITE CONDITIONS MAY REQUIRE ADDITIONAL BACKFILL.
3. POTENTIAL FOR ENCOUNTERING ROCK BEFORE REACHING EMBEDMENT DEPTH. ROCK AUGERING EQUIPMENT MAY BE REQUIRED.

PRECAST BASE IDENTIFICATION

PRECAST BASE TYPE	PRECAST BASE WEIGHT	PRECAST BASE LENGTH	PROJECTION ABOVE GRADE	STANDARD EMBEDMENT	OUTSIDE DIAMETER
3B	2,470 LBS	20'-0"	8'-0"	12'-0"	13.38"
4B	3,490 LBS	22'-0"	8'-0"	14'-0"	15.75"

POLE IDENTIFICATION

POLE DESIGNATION	POLE TYPE	PRECAST BASE TYPE	FIXTURE CONFIGURATION (FIX. PER XARM)	FIXTURE AND ACCESSORIES EPA (FT²)
A1, A2	LSS60B	3B	4 (3)	12.0
B1, B2	LSS70C	4B	6 (5)	17.9

- ALL POLES HAVE (1) MUSCO LED FIXTURE AT 25'-0" AGL, INCLUDED ABOVE.

DESIGN NOTES

DESIGN PARAMETERS:
WIND: 105 MPH (EXP. C, I = 1.0) PER IBC CODE, 2009 EDITION (ASCE 7-05).
DESIGN WIND PARAMETERS ARE AS NOTED. ACTUAL WIND SPEED AND EXPOSURE MUST BE VERIFIED FOR THE SITE BY THE PROPER GOVERNING OFFICIAL.

GEOTECHNICAL PARAMETERS:
REQUIRED ALLOWABLE END BEARING SOIL PRESSURE: 1,000 PSF
ALLOWABLE LATERAL SOIL BEARING PRESSURE:
0 PSF/FT (GRADE TO -2'-0"); VALUES VARY PER BORING (BELOW -2'-0")
IN ACCORDANCE WITH THE 2009 EDITION OF THE INTERNATIONAL BUILDING CODE, CHAPTER 18.

DESIGN SOIL PARAMETERS ARE AS NOTED. ACTUAL ALLOWABLE SOIL PARAMETERS MUST BE VERIFIED ON SITE. REFERENCE SOILS AND FOUNDATION REPORT, NO. 17,080.NH, PREPARED BY MILLER ENGINEERING & TESTING, INC.; MANCHESTER, NH.

A GEOTECHNICAL ENGINEER OR REPRESENTATIVE OF IS RECOMMENDED (NOT REQUIRED) TO BE AVAILABLE AT THE TIME OF THE FOUNDATION INSTALLATION TO VERIFY THE SOIL DESIGN PARAMETERS AND TO PROVIDE ASSISTANCE IF ANY PROBLEMS ARISE IN FOUNDATION INSTALLATION.

ENCOUNTERING SOIL FORMATIONS THAT WILL REQUIRE SPECIAL DESIGN CONSIDERATIONS OR EXCAVATION PROCEDURES MAY OCCUR. POLE FOUNDATIONS WILL NEED TO BE ANALYZED ACCORDING TO THE SOIL CONDITIONS THAT EXIST. IF ANY DISCREPANCIES OR INCONSISTENCIES ARISE, NOTIFY THE ENGINEER OF SUCH DISCREPANCIES. FOUNDATIONS WILL THEN BE REVISED ACCORDINGLY. REVISIONS WILL BE ANALYZED PER RECOMMENDATIONS DIRECTED BY A REGISTERED ENGINEER.

ALL EXCAVATIONS MUST BE FREE OF LOOSE SOIL AND DEBRIS PRIOR TO FOUNDATION INSTALLATION AND CONCRETE BACKFILL PLACEMENT. TEMPORARY CASINGS OR DRILLERS SLURRY MAY BE USED TO STABILIZE THE EXCAVATION DURING INSTALLATION. CASINGS MUST BE REMOVED DURING CONCRETE BACKFILL PLACEMENT. CONCRETE BACKFILL MUST BE PLACED WITH A TREMIE WHEN SLURRY OR WATER IS PRESENT WITHIN THE EXCAVATION OR WHEN THE FREE DROP EXCEEDS 6'-0".

CONTRACTOR MUST BE FAMILIAR WITH THE COMPLETE SOIL INVESTIGATION REPORT AND BORINGS, AND CONTACT THE GEOTECHNICAL FIRM (IF NECESSARY) TO UNDERSTAND THE SOIL CONDITIONS AND THE POSSIBILITY OF GROUND WATER PUMPING AND EXCAVATION STABILIZATION OR BRACING DURING PRECAST BASE INSTALLATION AND PLACEMENT OF CONCRETE BACKFILL.

CONCRETE:
CONCRETE SHALL BE AIR-ENTRAINED AND HAVE A MINIMUM COMPRESSIVE DESIGN STRENGTH AT 28 DAYS OF 3,000 PSI. 3,000 PSI CONCRETE SPECIFIED FOR EARLY POLE ERECTION, ACTUAL REQUIRED MINIMUM ALLOWABLE CONCRETE STRENGTH IS 1,000 PSI. ALL PIERS AND CONCRETE BACKFILL MUST BEAR ON AND AGAINST FIRM UNDISTURBED SOIL.

GENERAL NOTES:
FIXTURES MUST BE LOCATED TO MAINTAIN 10'-0" MINIMUM HORIZONTAL CLEARANCE FROM ANY OBSTRUCTION. ENGINEER MUST BE NOTIFIED IF FOUNDATIONS ARE NEAR ANY RETAINING WALLS, OR WITHIN / NEAR ANY SLOPES STEEPER THAN 3H : 1V. POLES, FIXTURES, PRECAST BASES, ELECTRICAL ITEMS AND INSTALLATION PER MUSCO LIGHTING.

Typical Light Structure

(Refer to equipment listing for quantity of light fixtures on each pole and height of each pole)

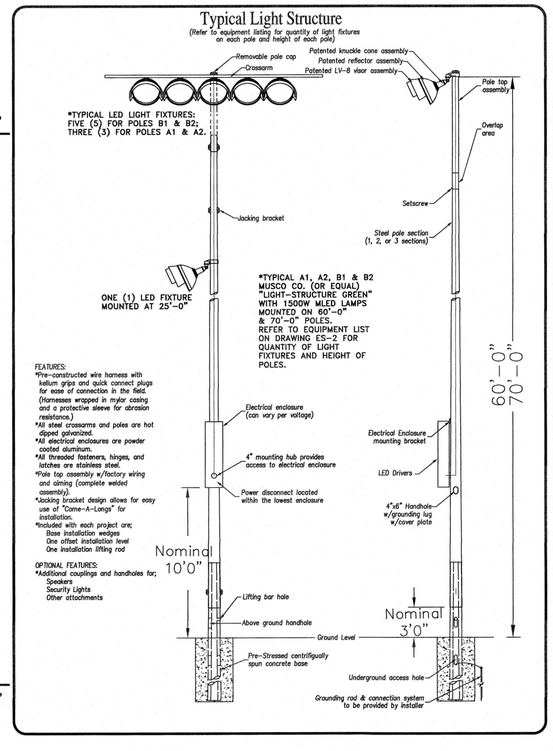

SCALE: 1 INCH = 20 FEET
0 5 10 20 40 60
FEET

Carolyn Cooney & Associates
Landscape Architecture / Planning
13 Elm Street, Milford, MA 01757
Telephone 508 478 8426, Facsimile 508 478 8607

COMMONWEALTH OF MASSACHUSETTS
ROBERT J. FIGUEIRIDO
ELECTRICAL
No. 29029
REGISTERED PROFESSIONAL ENGINEER

SHEPHERD ENGINEERING, INC.
ELECTRICAL CONSULTANTS
1,508 GRAFTON STREET
WORCESTER, MASSACHUSETTS 01604
PHONE: (508) 757-7793 * FAX: (508) 753-2309
REFERENCE NO.: 17002

No.	Description	Date

REVISIONS

North

Project:

CITY OF WALTHAM
ELSIE TURNER FIELD
425 TRAPELO ROAD
WALTHAM, MA 02452

Prepared For:

CITY OF WALTHAM
DEPARTMENT OF RECREATION
510 MOODY STREET
WALTHAM, MA 02453

TITLE:

SITE PLAN
ELECTRICAL

Scale 1"=20'
Date SEPT 12, 2017
Drawn By AJV
Checked By MRF
Approved By JDS
Project No. 1710.00

DWG No. ES.1A

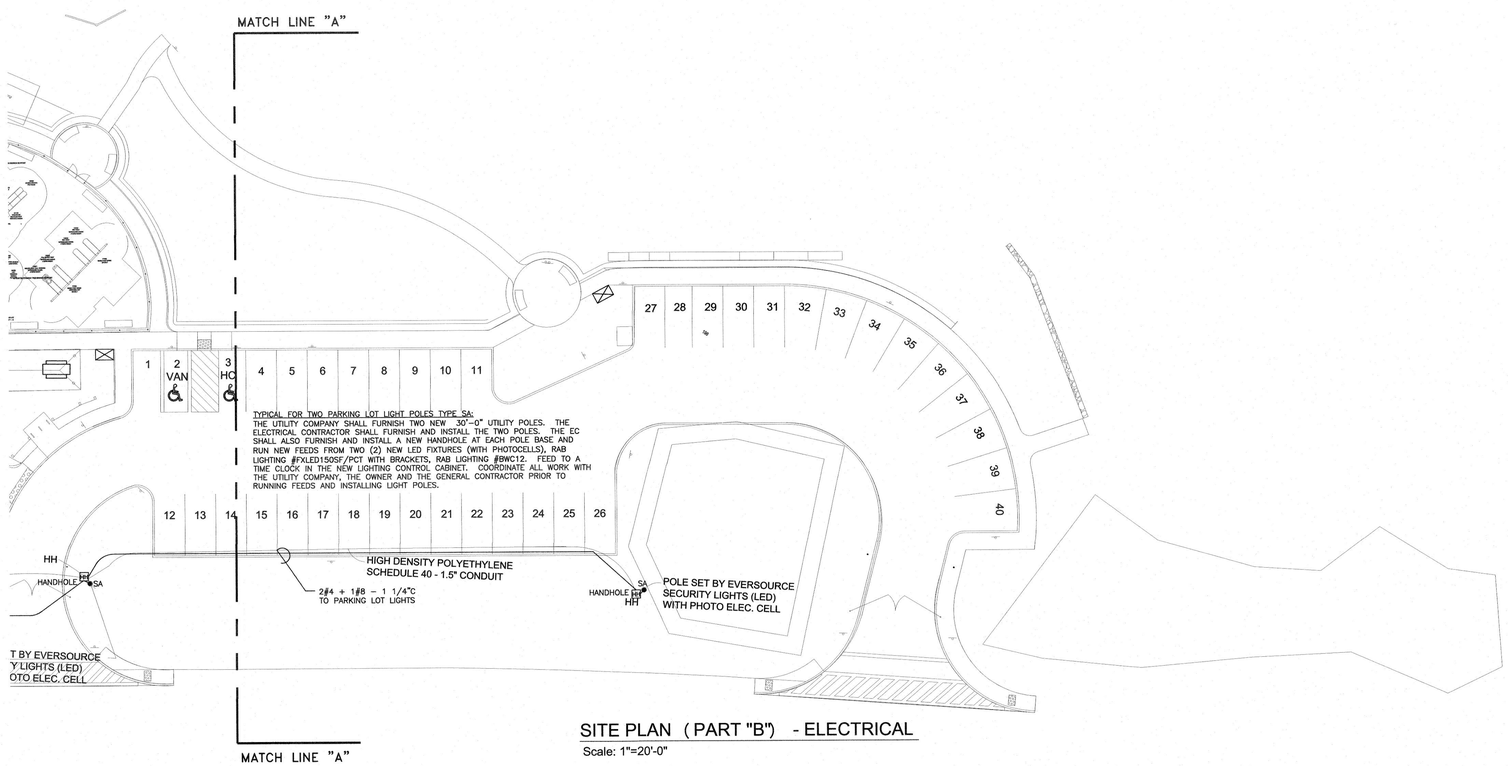

SITE PLAN (PART "B") - ELECTRICAL

Scale: 1"=20'-0"

NOTE: TRENCHING REQUIREMENTS:
THE GENERAL CONTRACTOR SHALL BE RESPONSIBLE FOR ALL TRENCHING, BACK FILL, ENCASEMENTS AND ANY PAVING. THE ELECTRICAL CONTRACTOR SHALL INSTALL ALL CONDUITS AND RELATED SPACES. ALL TRENCHES SHALL BE INSPECTED PRIOR TO BACK-FILL.

SCALE: 1 INCH = 20 FEET

FEET 0 5 10 20 40 60

Carolyn Cooney & Associates
Landscape Architecture / Planning
13 Elm Street, Milford, MA 01757
Telephone 508 478 8426, Facsimile 508 478 8607

COMMONWEALTH OF MASSACHUSETTS
ROBERT J. FIGUEIROUO
ELECTRICAL
No. 29029
REGISTERED PROFESSIONAL ENGINEER

SHEPHERD ENGINEERING, INC.
ELECTRICAL CONSULTANTS
1308 GRAFTON STREET
WORCESTER, MASSACHUSETTS 01604
PHONE: (508) 757-7793 * FAX: (508) 753-2309
REFERENCE NO.: 17002

No.	Description	Date

REVISIONS

North

Project:

CITY OF WALTHAM
ELSIE TURNER FIELD
425 TRAPELO ROAD
WALTHAM, MA 02452

Prepared For:

CITY OF WALTHAM
DEPARTMENT OF RECREATION
510 MOODY STREET
WALTHAM, MA 02453

TITLE:

SITE PLAN
ELECTRICAL

Scale 1"=20' Date SEPT 12, 2017
Drawn By AJV
Checked By MRF
Approved By JDS
Project No. 1710.00

DWG No. ES.1B

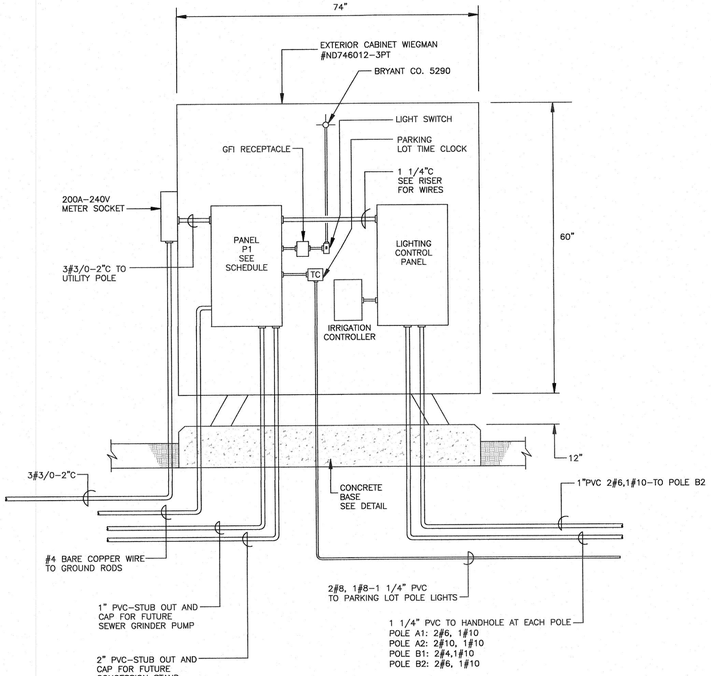

CONTROL CABINET DETAIL

NOT TO SCALE

NOTE: TRENCHING REQUIREMENTS:
THE GENERAL CONTRACTOR SHALL BE RESPONSIBLE FOR ALL TRENCHING, BACK FILL, CONCRETE ENCASEMENTS AND PAVING. THE ELECTRICAL CONTRACTOR SHALL INSTALL ALL CONDUITS AND RELATED SPACES. ALL TRENCHES SHALL BE INSPECTED PRIOR TO BACK-FILL.

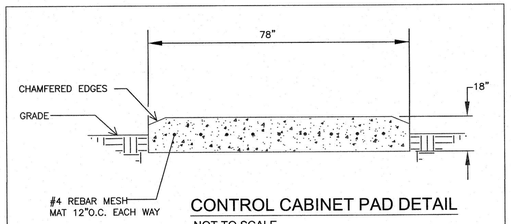

CONTROL CABINET PAD DETAIL

NOT TO SCALE

REFER TO CONCRETE SPECIFICATION
MINIMUM 3000 LBS. CONCRETE CURED MINIMUM OF 28 DAYS. INSTALL AN EXPANSION JOINT WHERE NECESSARY.

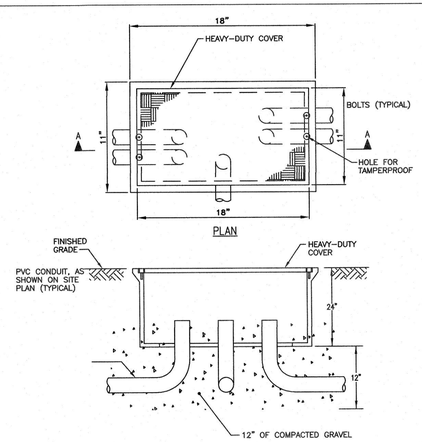

HAND HOLE "HH" DETAIL

NOT TO SCALE

QUAZITE CO. OR EQUAL #PC1118BG18 WITH #PC118HG29 COVER (LABEL COVER: LIGHTING)

LIGHT FIXTURE POLE SCHEDULE

TYPE	FIXTURES	FIXTURE TYPE	CONTACTOR ID
A1	4 (3 HIGH; 1 LOW)	1500W LED	C1
A2	4 (3 HIGH; 1 LOW)	1500W LED	C2
B1	6 (5 HIGH; 1 LOW)	1500W LED	C3
B2	6 (5 HIGH; 1 LOW)	1500W LED	C4

PANEL: P1

MAIN: 200A MCB
VOLTAGE: 120/240V PHASE: 1 WIRE: 3
TYPE: SQUARE D CO. OR EQUAL SURFACE BOLT ON

CIR	DESCRIPTION	TRIP	POLE	CIR	DESCRIPTION	TRIP	POLE
1	POLE A1	30	2	2	POLE A2	30	2
3				4			
5	POLE B1	50	2	6	POLE B2	50	2
7				8			
9	GFI DUPLEX RECEPT.	20	1	10	EXIST. LIGHTING CONTROL PANEL	20	1
11	IRRIGATION SYSTEM	20	1	12	SCOREBOARD	20	1
13	PARKING LOT LIGHTS	20	2	14	SPARE	20	1
15				16	SPARE	20	1

PANEL LC1 SCHEDULE SUMMARY BY ZONE

POLE	POLE HT	CIRCUIT DESCRIPTION	# OF FIXTURES	FLA	CONTACTOR SIZE
A1	60	MULTI-PURPOSE	4	24.2A	30
A2	60	MULTI-PURPOSE	4	24.2A	30
B1	70	MULTI-PURPOSE	6	36.3A	60
B2	70	MULTI-PURPOSE	6	36.3A	60

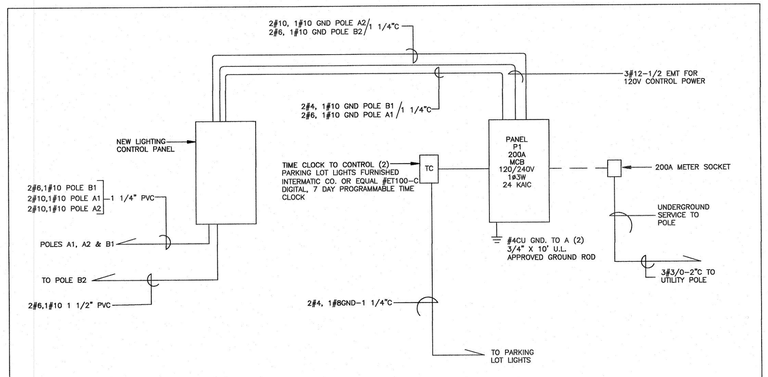

POWER RISER

NOT TO SCALE

NOTE: TRENCHING REQUIREMENTS:
THE GENERAL CONTRACTOR SHALL BE RESPONSIBLE FOR ALL TRENCHING, BACK FILL, CONCRETE ENCASEMENTS AND PAVING. THE ELECTRICAL CONTRACTOR SHALL INSTALL ALL CONDUITS AND RELATED SPACES. ALL TRENCHES SHALL BE INSPECTED PRIOR TO BACK-FILL.

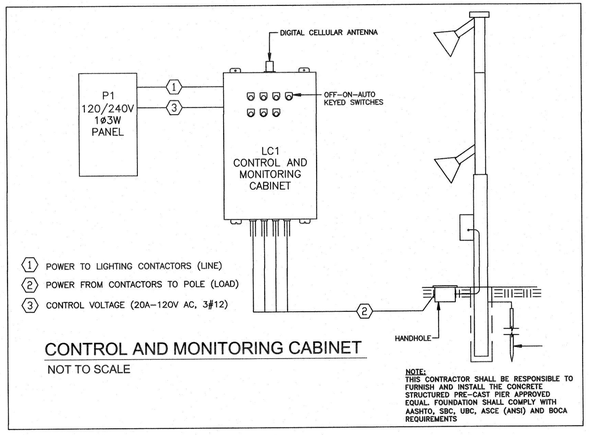

CONTROL AND MONITORING CABINET

NOT TO SCALE

NOTE:
THIS CONTRACTOR SHALL BE RESPONSIBLE TO FURNISH AND INSTALL THE CONCRETE STRUCTURED PRE-CAST PIER APPROVED EQUAL. FOUNDATION SHALL COMPLY WITH AASHTO, SBC, UBC, ASCE (ANSI) AND BOCA REQUIREMENTS

Carolyn Cooney & Associates
Landscape Architecture / Planning
13 Elm Street, Milford, MA 01757
Telephone 508 478 8426, Facsimile 508 478 8607

COMMONWEALTH OF MASSACHUSETTS ROBERT J. FIGUEIRIDO ELECTRICAL No. 29028

SHEPHERD ENGINEERING, INC.
ELECTRICAL CONSULTANTS
1308 GRAFTON STREET
WORCESTER, MASSACHUSETTS 01604
PHONE: (508) 757-7793 * FAX: (508) 753-2309
REFERENCE NO.: 1700Z

No.	Description	Date

REVISIONS

Project:

CITY OF WALTHAM
ELSIE TURNER FIELD
425 TRAPELO ROAD
WALTHAM, MA 02452

Prepared For:

CITY OF WALTHAM
DEPARTMENT OF RECREATION
510 MOODY STREET
WALTHAM, MA 02453

TITLE:

ELECTRICAL DETAILS

Scale N.T.S. Date SEPT 12, 2017
Drawn By AJV
Checked By MRF
Approved By JDS
Project No. 1710.00

DWG No. ES.2

CONSTRUCTION DETAILS
IN
WALTHAM, MA
"ELSIE TURNER FIELD"

SCALE: 1" = N.T.S.'

DATE: October 11, 2017

WILLIAMS & SPARAGES
ENGINEERS | PLANNERS | SURVEYORS
189 NORTH MAIN STREET
SUITE 101
MIDDLETON, MA 01949
PHONE: (978) 539-8088
FAX: (978) 539-8200
WWW.WSENGINEERS.COM

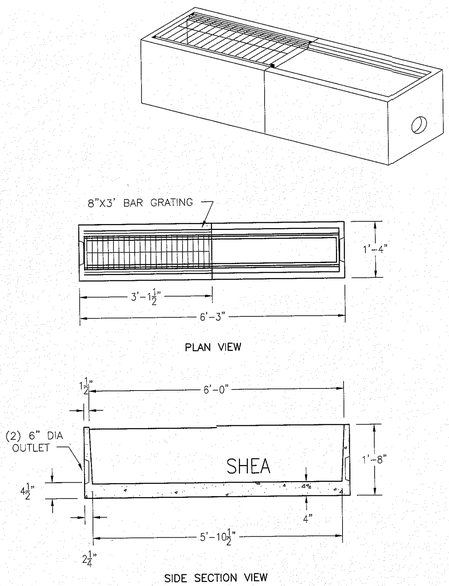

			WEIGHT
ITEM NO.	M-TD6	6' SECTION	1,315#
	M-TD3	3' SECTION	711#

NOTES:

1. CONCRETE: 4,000 PSI MINIMUM AFTER 28 DAYS.
2. AVAILABLE IN 3' AND 6' SECTIONS.
3. AVAILABLE IN END OR MIDDLE SECTIONS.
4. CONFORMS TO H-20 LOADING.

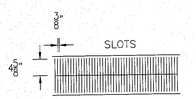

HANDICAP GRATE (OPTIONAL)

TRENCH DRAIN DETAIL
(NOT TO SCALE)

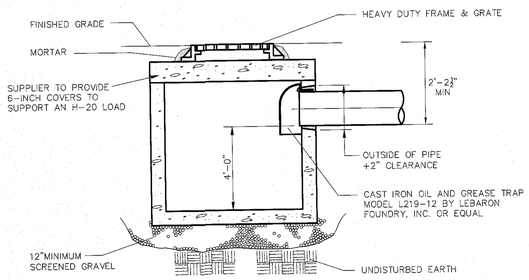

PRECAST SHALLOW CATCH BASIN DETAIL
(NOT TO SCALE)
NOTE: GRANITE CURB INLETS TO BE USED

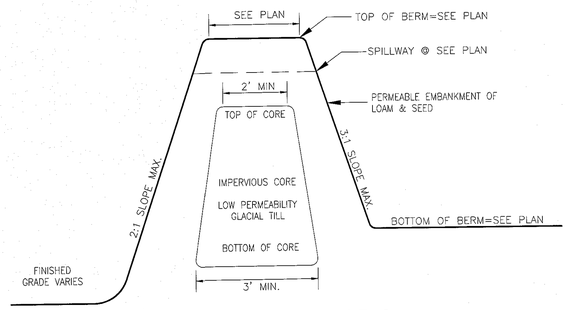

BIO RETENTION AREAS
EARTH BERM CONSTRUCTION
(NOT TO SCALE)

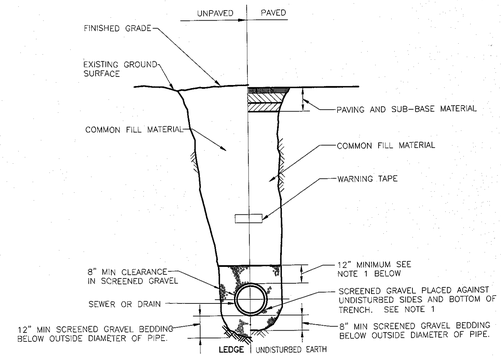

NOTES :

1. FOR PIPES OTHER THAN PVC, SELECTED COMMON FILL MAY BE USED FROM MID-DIAMETER OF PIPE TO 12" ABOVE TOP OF PIPE

TRENCH DETAIL FOR
GRAVITY PIPE
(NOT TO SCALE)

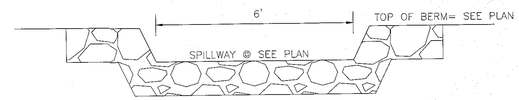

12" LAYER OF 40 - 60 LB. STONES (8" TO 10" DIAMETER) MIN.

BIO RETENTION AREA #3
SPILLWAY CONSTRUCTION
DETAIL
(NOT TO SCALE)

UTILITY NOTES:

1) THE UTILITIES SHOWN ON THE SITE PLANS WERE PROVIDED BY MARSHALL/GARY LLC AND ARE NOT THE RESULT OF AN INSTRUMENT SURVEY PERFORMED BY WILLIAMS & SPARAGES.

2) NO REPRESENTATION OR WARRANTEE IS MADE AS TO THE ACCURACY OF THE LOCATION OF THE SUBSURFACE UTILITIES AND SHOULD BE CONSIDERED APPROXIMATE.

3) THE CONTRACTOR SHALL BE RESPONSIBLE FOR CONTACTING DIGSAFE PRIOR TO CONSTRUCTION.

4) ALL UTILITIES SHALL BE VERIFIED IN THE FIELD BY THE CONTRACTOR PRIOR TO THE START OF CONSTRUCTION AND SHALL NOTIFY THE CITY OF WALTHAM ENGINEER IF EXISTING CONDITIONS DIFFER FROM THOSE SHOWN ON THE PLAN THAT WILL PREVENT THE PROPOSED WORK FROM BEING COMPLETED AS INTENDED.

5) SHOULD A CONFLICT ARISE AFTER THE START OF CONSTRUCTION BETWEEN AN EXISTING UTILITY AND THE PROPOSED WORK THE CONTRACTOR SHALL NOTIFY THE CITY'S REPRESENTATIVE IN WRITING.

6) WILLIAMS & SPARAGES' RESPONSIBLE CHARGE IS LIMITED TO THE PROPOSED DRAINAGE SYSTEM DESIGN ONLY.

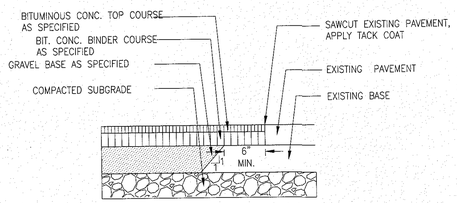

PAVEMENT MATCH
DETAIL
(NOT TO SCALE)

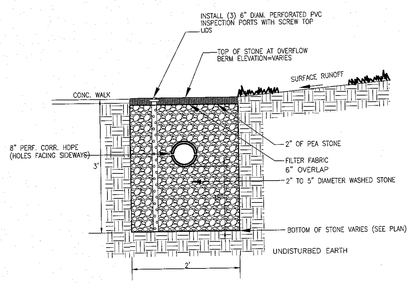

INFILTRATION TRENCH AT EASTERLY PARKING AREA
DETAIL
(NOT TO SCALE)
NOTE: SEE PLAN VIEW FOR PROPOSED LOCATION.

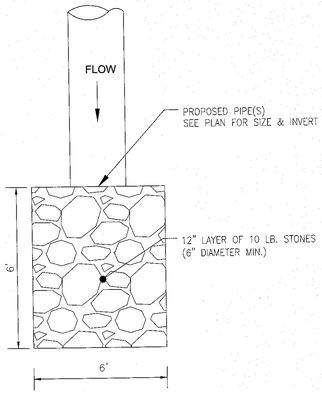

RIP RAP APRON
DETAIL
(NOT TO SCALE)

C.1

SEAL
COMMONWEALTH OF MASSACHUSETTS
PETER M. BLAISDELL, JR.
CIVIL
NO. 41613
REGISTERED PROFESSIONAL ENGINEER
(10/20/17)

W:\WALT-00002\18 Pine Vale Road\Drawings\WS\blaisdelcivil_C.dwg, 10/20/2017 12:29:54 PM, PMB

DESIGN ASSUMPTIONS – MAX. SLOPE ABOVE WALL 3H:1V, SLOPE BELOW WALL = LEVEL, 55 psf LIVE LOAD, 0 psf DEAD LOAD, MAXIMUM BEARING PRESSURE = 1400 psf.

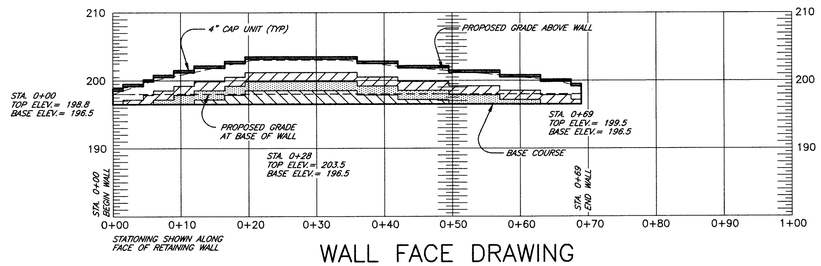

WALL FACE DRAWING

SCALE: 1" = 10'

SPECIAL NOTE : REFERENCE PLAN SHOWS A STONE DRAINAGE TRENCH IN FRONT OF THE WALL. WALL DRAIN MAY NOT BE CONNECTED INTO THE TRENCH BELOW GRADE.

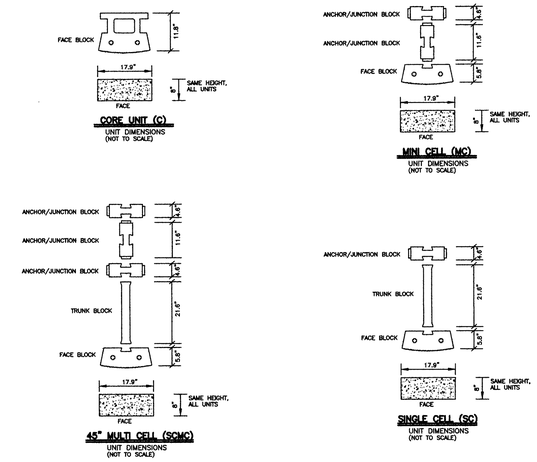

SEE REFERENCE DRAWING L.401 FOR LOCATION OF WALL ON SITE.

ORIENTATION IS STANDING IN PARKING LOT LOOKING NORTHEAST AT FACE OF WALL

LEGEND:

GRAVITY STONE "CORE UNIT"	
GRAVITY STONE "MINI CELL"	MINI CELL CONSISTS OF ONE "FACE BLOCK" AND TWO "ANCHOR BLOCKS"
GRAVITY STONE 32" DEEP SINGLE CELL	32" DEEP SINGLE CELL CONSISTS OF ONE "FACE BLOCK", ONE "TRUNK BLOCK", AND ONE "ANCHOR BLOCK"
GRAVITY STONE 45" DEEP MULTI CELL	45" DEEP MULTI-CELL CONSISTS OF ONE "FACE BLOCK", ONE "TRUNK BLOCK", AND THREE "ANCHOR BLOCKS"

CONSTRUCTION SEQUENCE:

1. LAY OUT 6 –INCH OFFSET FROM FACE OF WALL AND BACK OF WALL ON GROUND FOR BASE EXCAVATION.
2. REMOVE GRASS, ORGANICS, AND UNSUITABLE MATERIAL FROM WITHIN THE BASE LAYOUT. EXCAVATE TO A MINIMUM DEPTH OF 16" BELOW FINISHED GRADE.
3. COMPACT THE NATIVE SOIL AND LAY FILTER FABRIC AS SPECIFIED ON THE SURFACE OF THE SOIL. OVERLAP FABRIC PIECES BY TWO FEET.
4. PLACE STONE UP TO BASE ELEVATION FOR WALL AND RUN COMPACTOR OVER THE STONE TO CONSOLIDATE.
5. BEGIN INSTALLATION OF BASE COURSE. INSURE THAT ALL UNITS (FACE BLOCKS, TRUNKS AND ANCHORS) ARE LEVEL FRONT TO BACK AND SIDE TO SIDE. BUTT EACH FACE UNIT TIGHT AGAINST THE NEXT. IN FIRST COURSE ABOVE GRADE, SMALL GAPS BETWEEN UNITS MAY BE PROVIDED AS WEEPS.
6. FILL VOID AREAS WITH STONE. RUN COMPACTOR OVER TO CONSOLIDATE. ADD OR REMOVE STONE AS REQUIRED TO CREATE A LEVEL SURFACE FOR THE NEXT COURSE.
7. INSTALL SUBSEQUENT LAYERS IN ACCORDANCE WITH MANUFACTURER'S INSTRUCTIONS. ALIGNMENT PLUGS ARE TO BE INSTALLED FOR STANDARD SETBACK.
8. ALL FILL WITHIN THE WALL SYSTEM AND BETWEEN THE WALL SYSTEM AND THE FILTER FABRIC IS TO BE AASHTO #57 STONE.

NOTES:

1. CARE SHOULD BE TAKEN TO REMOVE ALL ORGANIC MATERIAL FROM THE BASE EXCAVATION FOR THE RETAINING WALL.
2. ENDS OF THE RETAINING WALLS SHALL BE BLENDED INTO THE FINISHED GRADE TO MINIMIZE EROSION POTENTIAL.
3. FOR FENCE POSTS LOCATED LESS THAN 3 FEET FROM THE REAR OF THE WALL BLOCK USE OF THE "SLEEVE-IT" FENCE POST INSTALLATION SYSTEM (www.fencesleeve.com) IS RECOMMENDED. THIS PROCEDURE INVOLVES THE USE OF THE "SLEEVE-IT" POST RISER AND SUPPORT STRUTS AND IS INSTALLED WHEN THE WALL IS APPROX. 24" BELOW ITS FINISHED GRADE. ALTERNATIVELY A SLEEVE MAY BE INSTALLED VERTICALLY THROUGH THE ANCHOR TRUNKS AND SET IN CONCRETE.
4. FOR PIPES WHICH OUTLET THROUGH THE WALL, THE SPACE NEEDED TO SQUARE-OFF THE PIPE TO THE WALL MAY BE FILLED WITH NON-SHRINK MORTAR, BLOCKS CUT TO SIZE OR OTHER APPROVED SEALANT METHOD TO PREVENT MIGRATION OF FINES THROUGH GAPS AROUND THE PIPE. A GRANITE OR CONCRETE LINTEL IS AN APPROVED METHOD OF SPANNING THE PIPE FOR SUPPORT OF THE WALL ABOVE.
5. ANY UTILITY LINE HAVING A DIAMETER GREATER THAN 4" AND PASSING UNDER A RETAINING WALL MUST HAVE A MINIMUM CLEARANCE OF 24" BETWEEN THE WALL BASE COURSE AND THE CROWN OF THE UTILITY LINE. WHERE THIS MINIMUM CLEARANCE CANNOT BE ACHIEVED, A GRANITE OR CONCRETE HEADER SHALL BE INSTALLED OVER THE PIPE. THIS HEADER SHALL EXTEND AT LEAST 24" BEYOND BOTH SIDES OF THE PIPE, RUNNING ALONG THE WALL BASE. THE HEADER SHALL BE AT LEAST 12" DEEP (TO MATCH THE WALL DEPTH) AND BE CENTERED BENEATH THE WALL BASE. THE HEADER SHALL BE AT LEAST 8" IN HEIGHT.
6. WALL BASE, UNIT BACKFILL AND DRAINAGE STONE SHALL BE AASHTO #57 STONE COMPACTED BASE (95% STANDARD PROCTOR) TO HAVE MINIMUM BEARING CAPACITY IN ACCORDANCE WITH REQUIREMENTS SHOWN ON THE WALL FACE DRAWING.
7. INSTALL WALLS IN ACCORDANCE WITH THESE PLANS AND THE MANUFACTURER'S INSTALLATION INSTRUCTIONS.
8. THESE WALLS HAVE BEEN DESIGNED WITH CONSIDERATION OF SEISMIC LOADINGS.
9. THE LAYOUT OF THIS WALL IS BASED ON A PLAN BY CAROLYN COONEY & ASSOCIATES TITLED "L.401 GRADING & UTILITIES PLAN DATED AUGUST 27, 2017.
10. THE CONTRACTOR IS RESPONSIBLE FOR CONTACTING DIG-SAFE PRIOR TO PERFORMING ANY EXCAVATION, AND FOR MAINTAINING ALL EXCAVATIONS AND WORK AREAS IN A SAFE CONDITION IN ACCORDANCE WITH ALL APPLICABLE REGULATIONS.
11. A 4" DIA. SCH 40 PVC DRAIN IS TO BE INSTALLED IN ONE OF TWO LOCATIONS: A) A THICKENED SECTION OF BASE, OR B) BEHIND THE COURSE OF BLOCK IMMEDIATELY ABOVE THE FINISHED GRADE IN FRONT OF THE WALL. DRAIN MAY BE CONNECTED TO THE PROPOSED CATCH BASINS LOCATED NEAR EACH END OF THE WALL, OR BE DAYLIGHTED AT BOTH ENDS OF THE WALL. ALL PIPE WITHIN THE WALL ENVELOPE (BETWEEN BLOCK AND FILTER FABRIC) SHALL BE PERFORATED. PIPE OUTSIDE OF THIS ENVELOPE (E.G., CONNECTION TO CATCH BASINS) SHALL BE SOLID WALL. CONNECTIONS TO CATCH BASINS SHALL BE ABOVE THE HIGH WATER LEVEL. IF DAYLIGHTED, A SLOTTED COVER MAY BE INSTALLED ON THE PIPE END AS AN AESTHETIC TREATMENT.

IMPERVIOUS MATERIAL
GENERAL REQUIREMENTS

SIEVE SIZE	% PASSING
3"	100%
#4	80–100%
#40	50–90%
#100	40–80%
#200	30–80%

DESIGN ASSUMPTIONS

SOIL	SOIL UNIT WEIGHT	ϕ
UNIT FILL – 3/4" STONE (AASHTO #57 SPEC.)		
RETAINED EARTH	130	32
FOUNDATION SOIL	120	30

APPLIED LIVE LOAD = 55 psf
APPLIED DEAD LOAD = 0 psf
SLOPE BEHIND WALL 3H:1V
SEISMIC ACCELERATION = 0.18

MINIMUM FACTORS OF SAFETY

OVERTURNING	2.0
SLIDING	1.5
BEARING CAPACITY	2.0

A GLOBAL STABILITY ANALYSIS WAS NOT PERFORMED FOR THE WALLS SHOWN ON THESE PLANS.

INSTALL FENCE AS REQUIRED BY CODE AND AESTHETICALLY ACCEPTABLE TO OWNER. SEE NOTE 3. THIS SHEET FOR POST INSTALLATION GUIDELINES.

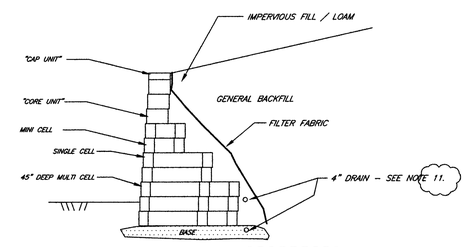

ALTERNATIVE IS TO PLACE FILTER FABRIC AGAINST EXCAVATION FACE AND FILL ENTIRE AREA WITH DRAINAGE STONE, WITH FILTER FABRIC WRAPPED ACROSS THE TOP OF THE STONE AND BACK AGAINST THE BLOCKS.

6.7'

3 crses core
2 crses mini cell
2 crses single cell
3 crses 45" multi cell

TYPICAL SECTION – MAX HEIGHT

SAME FOR ENTIRE WALL LENGTH EXCEPT 0+00 TO 0+06 ±
BASE SHALL BE A MINIMUM OF 6" THICK AND EXTEND 6" BEYOND THE WALL BASE
FILTER FABRIC (MIRAFI 140N OR EQUAL) SHALL BE LAID ON GRADE PRIOR TO PLACING STONE.

REV. #1 MODIFIED NOTES AND DETAILS PER REVIEW COMMENTS 10/18/17 ASC

COWEESET ENGINEERING
77 WALNUT STREET, WEST BRIDGEWATER MA – TEL: 508-427-0065, FAX: 508-427-0068

CLIENT: CAROLYN COONEY & ASSOCIATES
13 ELM STREET, MILFORD, MASSACHUSETTS 01757

PROJECT: PROPOSED RETAINING WALL
ELSIE TURNER FIELD, 425 TRAPELO ROAD,, WALTHAM, MASSACHUSETTS

SHEET TITLE: RETAINING WALL ELEVATION, LEGEND, NOTES AND DETAILS

DATE:	PROJECT No.:	SCALE:
OCTOBER 17, 2017	17-134	AS SHOWN

COMMONWEALTH OF MASSACHUSETTS ARTHUR S. CABRAL CIVIL No. 45941 REGISTERED PROFESSIONAL ENGINEER
10/18/17

SHEET 1 OF 1

S.1

GRAVERSON PARK SPECIFICATIONS AND DRAWINGS

Technical Specifications

Technical Specifications – Graverson Playground

DIVISION 1

01010 Summary of Work
01020 Allowances
01025 Measurement and Payment
01028 Change Order
01040 Control of the Work
01050 Field Engineering
01200 Project Meetings
01300 Submittals
01400 Quality Control
01500 Temporary Facilities
01571 Order of Conditions
1700 Project Close-out

DIVISION 2

02100 Site Preparation and Demolition
02150 Existing Trees to Remain
02200 Earthwork
02510 Bituminous Concrete Paving
02515 Precast Concrete Pavers
02540 Safety Surfacing
02590 Color Coating
02595 Traffic Pavement Marking
02622 Field Drainage System
02667 Water Service Systems
02670 Backflow Preventer Cabinet
02725 Drainage & Sewer Pipe
02728 Drainage Structures
02730 Deck Drains
02805 Benches & Picnic Tables
02810 Bicycle Racks
02810 Irrigation System
02815 Big Belly Kiosks
02920 Water Play Equipment
02825 Chain Link Fencing
02830 Welded Wire Fence
02835 Steel Service Gate
02845 Wood Guardrail
02848 Athletic Equipment
02860 Playground Equipment
02865 Bocce Court
02875 Shade Shelters
02891 Traffic Signs
02901 Planting Soils
02902 Fertilizer & Amendments
02925 Lawns & Native Grasses
02950 Planting
03300 Cast-in-Place Concrete
03350 Colored Concrete Finishing
05520 Metal Railings
09614 Detectable Warning Panels
16100 Electrical Service Systems

Appendix A - Order of Conditions

Division I

SECTION 01010

SUMMARY OF WORK

PART 1- GENERAL

1.01 PROJECT DESCRIPTION

A. The project consists of improvements to the existing Graverson Playground, 16 Pine Vale Road, Waltham, MA 02451 as described in the Contract Documents.

1.02 WORK TO BE DONE

A. The work of this Contract includes, but is not limited to:

1. Demolition of miscellaneous park elements as shown on the Demolition plan.

2. Installation of the following items supplied by the Owner:

(a) Play equipment
(b) Water Spray Equipment & operating system

3. The Contractor shall furnish and install all other improvements noted on the Drawings which are not specifically listed as furnished by the Owner. These include but are not necessarily limited to site preparation and demolition, earthwork, site drainage and infiltration system, concrete paving, bituminous concrete paving, precast unit pavers on bituminous setting bed and concrete base, safety surfacing, line painting and color-coating, cast-in-place concrete curb walls, chain link and welded wire fencing, steel maintenance gate, site furniture, wood guardrails, metal shade shelters, fabric shade shelters, basketball goals, baseball backstop, site lighting, electrical service and irrigation systems, water & sewer connections with associated roadway restoration, seeding, planting and preservation of existing trees to remain.

1.03 1.03 SPECIAL CONDITIONS

A. The project is subject to an Order of Conditions issued by the Waltham Conservation Commission and MA DEP. The Work this project includes compliance with the stipulations of the Order. The Order is included in these Specifications as Appendix A.

1.04 CONTRACT TIME

A. The time for Substantial Completion of the work is as stated in the bidding documents.

B. The Contractor shall submit shop drawings, data and samples and place his/her orders sufficiently early to permit consideration and approval by the Landscape Architect before materials are necessary for incorporation into the Work. Any delay resulting from the Contractor's failure to do so shall not be used as a basis of a claim against the Owner.

1.05 CONTRACT DOCUMENTS

A. The Contract Documents are enumerated in the Agreement, and include these Specifications and the Drawings, for the City of Waltham, by Carolyn Cooney & Associates, Landscape Architects, 13 Elm Street, Milford, MA 01757.

1.06 INSPECTION OF THE SITE

A. It is a requirement of the Contract that the Contractor and his/her subcontractors shall have thoroughly inspected the site during the bidding period. By submitting a bid they confirm that they are thoroughly familiar with the site and all existing conditions which impact and affect their work. Requests for extra compensation will not be considered for any work which could have been foreseen by a visual inspection of the site.

1.07 CONTRACTOR'S USE OF THE SITE

A. The Contractor shall furnish his/her own toilet facilities on-site.

B. The Contractor shall take all precautions necessary to protect the abutting properties during construction. Any and all damage caused by construction operations shall be repaired.

C. The project site shall be kept clean and free from accumulation of waste material and debris.

1. The Contractor, his/her Subcontractors, and their employees shall be respectful and courteous of the neighborhood while working on site.

1.08 CITY OF WALTHAM NOISE ORDINANCE

A. The Contractor is advised that the City of Waltham has a Noise Ordinance, Section 10-6, which has the authority to regulate the noise generating activities of this Contract. In general the Ordinance prohibits excessive noise created by construction, building, remodeling, excavating, land clearing, or by any of the equipment associated with such work. The Police Department considers the startup or idle running of truck engines and/or equipment prior to 7:00 AM a violation.

1.09 ENCLOSURES

A. Provide at the earliest practical time temporary enclosure of materials, work in progress and completed portions of the work to provide protection to the work and the employees.

1.010 SAFETY AND SECURITY

A. The Contractor shall be responsible for the safety and security of those areas of the park site where construction is occurring and for the safety of all persons who enter within the Contract Limit Line.

1. The Playground shall be closed to the public throughout the duration of construction activity. Gates or other temporary openings in the fencing used to allow construction personnel or equipment access shall be maintained closed at all times to prevent access by the public.

2. The Contractor shall provide signage, in locations as indicated on the Drawings and as described 01500-Temporary Controls & Facilities, indicating the temporary closure of the park.

3. Safety measures shall include all those actions deemed necessary by the Contractor to ensure the safety of park users. These shall include but are not necessarily limited to:

   (a) Temporary fencing at perimeter of the park as indicated on the Drawings.

   (b) Filling in of all excavations at the end of the work day.

B. The Contractor shall be responsible for initiating, maintaining, and supervising all safety precautions & programs in connection with the work. He/she shall promulgate safety regulations and shall notify the Owner of particular hazards.

C. The Contractor shall erect and maintain, as required by existing conditions and progress of work, all reasonable safeguards for safety and security. This includes the construction of barriers and the posting of danger signs and other warnings against hazards. By these and other necessary methods the Contractor shall stop unauthorized entry within the Contract Limit of Work Line, which for this project is defined by the temporary construction fencing shown on the Drawings.

D. The Contractor is responsible for provision of additional safeguards not specifically required by the Drawings if these are necessary to protect health and safety.

E. The Contractor shall cooperate with and maintain a close liaison with the Recreation Department, Planning Department, Police Department, and Fire Department, and he/she shall abide by safety or security related requests from any of these authorities.

SECTION 01020

ALLOWANCES

PART 1- GENERAL

1.01 ALLOWANCE FOR POLICE DETAIL

A. The Contractor shall include as a line item in his/her bid, an allowance in the amount of Fifteen Thousand dollars ($15,000) for the cost of police detail. This sum shall be included in the total bid price proposed by the Contractor.

B. This allowance will cover the cost to the Contractor for police detail, if required to complete the work of this Contract.

1. The cost for police detail will be reimbursed to the Contractor as described in Section 1040 - Control of Work, Section 1.05 Traffic Police.

C. If the cost for Police Detail is more or less than the allowance, the Contract Sum shall be adjusted accordingly by Change Order.

D. The allowance and reimbursement for police detail does not include any provisions for Contractor overhead and profit or other expenses related to police detail, other than the direct costs billed to the Contractor by the City of Waltham Police Department.

1.02 ALLOWANCE FOR UNFORSEEN CONDITIONS

A. The intent of this Allowance is for changes in the work related to unanticipated subsurface conditions the mitigation of which is necessary to complete the work of the project. The Sum to be included for this Allowance shall be Sixty Thousand dollars ($60,000). This sum shall be included in the total bid price proposed by the Contractor, and shall be shown as a line item on the Bid Form.

B. The work relating to this Allowance will be completed only when and as directed by the Owner. The Contractor may not proceed with any work under this Allowance without the written notice of the Owner, at a mutually agreed upon fair and equitable price for the change in the work.

C. If at the completion of the project, the cost for this work is more or less than the Allowance, the Contract Sum shall be adjusted accordingly by Change Order.

1.03 ALLOWANCE FOR IRRIGATION BOOSTER PUMP

A. The intent of this Allowance is for changes in the work related to lack of adequate water pressure to run the irrigation system at Graverson Playground and a booster pump and appurtenances are needed. The Sum to be included for this Allowance shall be Fifteen Thousand dollars ($15,000). This sum shall be included in the total bid price proposed by the Contractor, and shall be shown as a line item on the Bid Form.

B. The work relating to this Allowance will be completed only when and as directed by the Owner. The Contractor may not proceed with any work under this Allowance without the written notice of the Owner, at a mutually agreed upon fair and equitable price for the change in the work.

C. If at the completion of the project, the cost for this work is more or less than the Allowance, the Contract Sum shall be adjusted accordingly by Change Order.

END OF SECTION

SECTION 01025

MEASUREMENT AND PAYMENT

PART 1- GENERAL

1.01 BID PRICE

A. Measurement & Payment

1. Payment for construction of Improvements to Graverson Playground will be on a lump-sum basis.

2. Payment of the lump-sum price under the Base Bid of the Proposal will fully compensate the Contractor for furnishing all labor, materials, equipment and incidentals required for work described in Section 01010, Summary of Work of this Specification.

1.02 PAYMENT PROCEDURES

A. Contractor shall submit substantiated monthly estimates for progress payments. The period covered by each Application for Payment shall be one (1) calendar month ending on the last day of the month.

B. Payment will be made in accordance with the requirements of Section 39K, M.G.L.

C. Initial Application for Payment: Administrative actions and submittals that must precede or coincide with submittal of first Application for Payment include the following:

1. List of subcontractors.
2. Schedule of Values.
3. Contractor's Construction Schedule (preliminary if not final).
4. Products list.
5. Submittals Schedule (preliminary if not final).
6. Copies of permits.
7. Initial progress report.
8. Certificates of insurance and insurance policies.

D. Refer to Section 01700 - Project Close-out for additional requirements for payments at Substantial Completion and Final Completion.

1.03 ADDITIONAL WORK

A. Additional Work, if any, shall be performed at a mutually satisfactory price agreed upon between the Contractor and the Owner through the process described in Section 01028 - Change Order Procedure.

END OF SECTION

SECTION 01028

CHANGE ORDER PROCEDURE

PART 1 - GENERAL

1.01 GENERAL PROVISIONS

A. Attention is directed to Attachment A and D of the Contract, concerning Change Orders. All Change Orders must be signed and approved by the Mayor of Waltham, the Chief Procurement Officer and the City Auditor prior to execution of the Work.

1.02 SCOPE OF WORK

A. Work included: Make such changes in the Work, in the Contract Sum, in the Contract Time of Completion, or any combination thereof, as are described in written Change Orders signed by the Owner and issued after execution of the Contract, in accordance with the provisions of this Section.

1.03 SUBMITTALS

A. Make submittals directly to the Landscape Architect at the address shown on the Project Manual.

B. Prepare in accordance with change order format in Appendix A of the Contract.

1.04 PRODUCT HANDLING

A. Maintain a “Register of Proposal Requests and Change Orders” at the job Site, accurately reflecting current status of all pertinent data.

B. Make the Register available to the Landscape Architect/Engineer for review at his/her request.

1.05 CHANGES INITIATED BY THE OWNER

A. Should the City contemplate making a change in the Work or a change in the Contract Time of Completion, the Landscape Architect will issue a “Proposal Request” to the Contractor.

1. Proposal Requests will be dated and will be numbered in sequence.

2. The Proposal Request will describe the contemplated change, and will carry one of the following instructions to the Contractor:

(a) Make the described change in the Work at no change in the Contract Sum and no change in the Contract Time of Completion.

(b) Make the described change in the Work, credit or cost for which will be determined in accordance with pertinent paragraphs of Appendix D <u>Change Orders</u>.

1.06 CHANGES INITIATED BY THE CONTRACTOR

A. Should the Contractor discover a discrepancy among the Contract Documents, a concealed condition, or other cause for suggesting a change in the Work, a change in the Contact Sum, or a change in the Contact Time of Completion, he shall notify the Landscape Architect.

B. Upon agreement by the Landscape Architect that there is reasonable cause to consider the Contractor's proposed change, the Landscape Architect will issue a Proposal Request in accordance with the provisions described in Article 1.05 above.

1.07 PROCESSING PROPOSAL REQUESTS

A. In response to each Request for Proposal, the Contractor shall:

1. Submit to the Landscape Architect for review one copy of completed Change Order Form (Appendix A of the Contract).

2. Meet with the Landscape Architect as required to explain costs and, when appropriate, to determine other acceptable ways to achieve the desired objective.

3. Alert pertinent personnel and subcontractors as to the impending change and, to the maximum extent possible, avoid such work as would increase the Owner's cost for making the change, advising the Landscape Architect in writing when such avoidance no longer is practicable.

B. Upon the signature of the Chief Procurement Officer and the City Auditor, the Landscape Architect will issue a "Change Order" to the Contractor.

1.08 CHANGE ORDERS

A. Change Orders will be dated and will be numbered in sequence.

B. The Change Order will describe the change or changes and will refer to the Proposal Request(s) involved.

C. The Landscape Architect will issue four copies of each Change Order to the Contractor.

1. The Contractor promptly shall sign all four copies and transmit all four copies to the Owner for processing.

END OF SECTION

SECTION 01040

CONTROL OF WORK

PART 1 - GENERAL

1.01 GENERAL PROVISIONS

A. Attention is directed to the General Conditions of the Contract, all Divisions of the Specifications and the Contract Drawings, all of which apply to this section.

1.02 EQUIPMENT

A. The Contractor shall furnish equipment which will be efficient, appropriate, and of sufficient quantity to secure a satisfactory quality of work and a rate of progress which will insure the completion of the Work within the time stipulated in the Contract Documents. If at any time such equipment appears to the Owner to be inefficient, inappropriate or insufficient for securing the quality of work required or for producing the rate of progress aforesaid, he may order the Contractor to increase the efficiency, change the character, or increase the equipment and the Contractor shall conform to such order. Failure of the Owner to give such order shall in no way relieve the Contractor of his obligations to secure the quality of work and rate of progress required. In addition, the Contractor shall maintain his equipment, including mufflers, oil seals or gaskets, and air pollution control devices, in proper working order.

1.03 PROJECT MANAGEMENT

A. The Work must be completed in a continuous uninterrupted operation. The Contractor must use sufficient labor and equipment to complete all the necessary work requirements within a minimum period of time and as stated in the Contract Documents.

B. Prior to the start of work, the Contractor shall submit a Progress Schedule in a bar chart form at the preconstruction meeting to the Landscape Architect for completing the Work. See Section 01300 - Submittals of this Specification.

C. The Contractor is fully responsible for the security and safety of partially completed work until the Project is finally accepted by the Owner and the Landscape Architect.

D. Hours of work for construction activities are limited to 8:00 AM to 4:00 PM Monday through Friday. Any changes to the work schedule must be authorized by the Landscape Architect and City Officials.

E. All work areas shall be secured, and materials and equipment shall be removed at the end of each work day.

F. The Contractor shall retain on the Project during its progress, a competent full-time

representative. This representative shall not be changed except with the consent of the Owner and Landscape Architect. The representative shall be in full charge of the Work and all instructions given to him shall be binding.

1.04 CITY OF WALTHAM NOISE ORDINANCE

A. The Contractor is advised that the City of Waltham has a Noise Ordinance, Section 10-6, which has the authority to regulate the noise generating activities of this Contract. In general the Ordinance prohibits excessive noise created by construction, building, remodeling, excavating, land clearing, or by any of the equipment associated with such work. The Police Department considers the startup or idle running of truck engines and/or equipment prior to 7:00 AM a violation. Permits to waive the noise ordinance must be approved and issued by the Chief of Police.

1.05 TRAFFIC POLICE

A. The Contractor shall provide for traffic control by uniformed police officers during all work within City streets. All bills for police detail must be paid in full by the Contractor. The Contractor will be reimbursed for these payments only after a qualifying bill stamped "Paid" by the City of Waltham Treasurer's Office is submitted to the Landscape Architect for reimbursement. Payment for special duty police will be made to the Contractor at a dollar for dollar reimbursement. Said price and payment shall be full compensation for furnishing all special duty police. The Contractor shall include in the lump sum bid price his/her line item an allowance for police detail as described in Section 01020 - Allowances.

B. The rate of payment for any police officer employed by the Contractor shall be at the rate established by the police department providing services for special duty police officers (MGL 149 34B). Payment shall be made by the Contractor within 30 days of billing. Failure to pay an outstanding bill within 30 days may result in a penalty charge to the Contractor for late payment. There will be no reimbursement for any penalties or late charges that may be assessed against the Contractor for late payment. Furthermore, the Landscape Architect will accept no further requests for payment if police detail bills are more than 30 days in arrears.

1. The estimated cost for police detail is $369.60 per officer per day (8 hrs). One-half day (4hrs) is $184.80, which is the minimum charge per day.

C. It is suggested that payments be made in person at the Treasurer's Office and that a photocopy of the bill be presented to the Treasurer's Office at the same time so that it may be stamped "PAID" and then presented to the Landscape Architect by the Contractor as proof of payment.

D. The Contractor will not be reimbursed for any detail that he fails to cancel when it is not required (inclement weather, change of plans, etc.). Reimbursement shall be made on all qualifying bills stamped "PAID" by the appropriate Treasurer's Office, less any amount for unnecessary details not cancelled by the Contractor, and presented to the

Landscape Architect. Reimbursement may be entered in the next following request for payment.

1.06 SITE INVESTIGATION OF EXISTING CONDITIONS

A. The Contractor acknowledges that he/she has satisfied him/herself as to the conditions existing at the Site of the Work, the type of equipment required to perform the Work, the quality and the quantity of the materials to be furnished insofar as this information is reasonably ascertainable from an inspection of the Site, as well as from information presented by the Specifications made a part of the Contract. Any failure of the Contractor to acquaint himself/herself with available information will not relieve him from the responsibility for estimating properly the difficulty or cost of successfully performing the Work.

B. No claim for extra compensation or extension of time will be allowed due to the Contractor's failure to estimate properly the quantities, locations and measurements of all items required to complete the Work.

C. Report any discrepancies to the Landscape Architect and request her/his interpretation.

1.07 PROTECTION OF WORK AREA

A. The Contractor shall secure all work areas by 4:00 PM each work day.

B. All of the Contractor's equipment, supplies, etc. left on-site, shall be secured daily. In no case will the Owner assume responsibility for damage or loss of materials, tools or equipment left on-site.

C. The Contractor shall take precautions to prevent injury to the public due to open excavations or excavated materials. All trenches, excavated materials, equipment, or other obstacles which could be dangerous to the public shall be secured in an agreed upon staging area.

1.08 LAWS AND REGULATIONS

A. The Contractor shall keep himself fully informed of all State and Federal laws and Municipal ordinances and regulations in any manner affecting those engaged or employed in the Work, or the materials used in the Work, or in any way affecting the conduct of the Work, and of all such orders and decrees of bodies or tribunals having any jurisdiction or authority over the same.

B. If any discrepancy or inconsistency is discovered in the Plans, Specifications, or Contract for the Work in relation to any such laws, ordinances, regulations, orders or decrees, the Contractor shall forthwith report the same to the Landscape Architect in writing. He/she shall at all times himself/herself observe and comply with, and shall cause all his/her agents and employees to observe and comply with all such laws, ordinances, regulations, orders, and decrees, and shall protect and indemnify the Owner and its

officers, agents and servants against any claim or liability arising from or based on the violation of any such laws, ordinances, regulations, and orders or decrees, whether by himself/herself or his/her employees or subcontractors.

1.09 PERMITS AND CODES

A. Under this Contract, all work shall be as shown in the Contract Drawings and Specifications and shall comply with applicable codes and regulations at the local, county, state, and federal levels. All labor, materials, equipment and services necessary to make the Work comply with such requirements shall be provided without additional cost to the Owner.

B. Do not close any street, sidewalk, alley, or passageway. Conduct operations as to interfere as little as possible with the use ordinarily made of roads, driveways, alleys, sidewalks, or other facilities near enough to the Work to be affected thereby.

C. Where code references are given, the latest issue of that Code in effect at the time of bidding shall be used. Code references are given to indicate the minimum quality and performance acceptable. Where Specifications and/or Contract Drawings indicate more stringent requirements, the Specifications or Contract Drawings shall govern.

D. The Contractor, under this Contract shall be responsible for providing and filing all Plans, Specifications and other documents, pay all requisite fees and secure all permits, inspections and approvals necessary for legal installation and operation of the systems and or equipment furnished under this Contract, except as otherwise specified.

1. Fees for City of Waltham permits will be waived by the City.

E. Comply also with applicable provisions of American National Standard Code for Building Construction ANSI Al0.6.

1.10 INSPECTION AND TESTS

A. Testing shall be as specified in Section 01400-Quality Control.

B. All material and workmanship shall be subject to inspection and examination by the Landscape Architect at any and all times during construction.

C. All work that is unsatisfactory, or fails to comply with the Specifications in the opinion of the Landscape Architect or City Officials, shall be corrected by the Contractor at his own expense to the satisfaction of the Landscape Architect.

1.11 SANITARY REGULATIONS

A. The Contractor shall provide adequate sanitary facilities for the use of those employed on the Work. Such facilities shall be made available when the first employees arrive on the Site of the Work, shall be properly secluded from public observation, and shall be

constructed and maintained during the progress of the Work.

B. The Contractor shall maintain the sanitary facilities in a satisfactory and sanitary condition at all times and shall enforce their use. He/she shall vigorously prohibit the committing of nuisance on the Site of the Work, on lands of the Owner, or an adjacent property.

1.12 COORDINATION AND RECEIPT OF OWNER FURNISHED MATERIALS

A. The Contractor shall coordinate with the Owner concerning the scheduling and delivery of Owner furnished items and as follows:

B. Upon receipt of the Notice to Proceed, the Contractor shall provide the Owner with their contact information and address for delivery. Subsequently, the Owner will provide this information to the Supplier, after which the Contractor shall assume complete responsibility for coordinating with the Supplier.

C. The Contractor shall be responsible for receipt, unloading, inspection of and storage of all Owner furnished items from the time of delivery.

D. The Contractor shall be responsible for unloading of all deliveries. The Contractor shall pay any extra delivery charges at the point of delivery such as off-loading by the supplier, lift-gate or inside deliveries should these services be required.

E. The Contractor is responsible for inspecting deliveries to ensure correct quantities and undamaged goods. The Contractor shall be responsible for addressing any deficiencies of the order with the supplier to obtain the correct goods.

F. The Contractor shall be responsible for following suppliers stated policies for time to return or notify of damaged goods.

G. The Owner assumes no responsibility for communicating with the supplier concerning damaged, missing, or incorrect goods.

1.13 COORDINATION WITH UTILITIES

A. The Contractor shall coordinate his/her Work with the utility companies to prevent damages or disruption to existing equipment and to coordinate new utility installations. The Contractor shall contact the utility companies owning underground equipment in the area of his work prior to commencing excavation. Contact with the utility companies shall be made sufficiently in advance so they can properly locate their equipment.

B. The contractor shall be responsible for locating all site items such as utilities which could be affected by this Contract prior to the start of construction. The Contractor shall contact Dig-Safe (1-888-344-7233) prior to the start of construction, and obtain a Certificate verifying that the location work has been completed. Contact the City of Waltham Engineer to verify the location of additional on-site utilities. Contact

telephone and communications companies to verify location of cables.

C. All right-of-way and site utilities (water, sewer, drainage) shall be inspected and approved by the City Engineer's Office.

D. Site information: No representations are made indicating subsurface conditions. It is expressly understood that the Owner/Landscape Architect will not be responsible for interpretations or conclusions drawn therefrom by the Contractor.

1.14 FIRE PROTECTION

A. Gasoline and other flammable liquids shall not be stored on site. They shall be dispensed from a UL listed safety containers in conformance with the National Board of Fire Underwriters recommendations. Do not store flammables near buildings.

1.15 CLEANUP

A. During the course of the Work, the Contractor shall keep the Site in as clean and neat a condition as possible. He/she shall dispose of all residue resulting from the work. At the conclusion of the day's work, the Contractor shall leave the entire site in a neat and orderly condition.

END OF SECTION

SECTION 01050

FIELD ENGINEERING

PART 1 - GENERAL

1.01 GENERAL PROVISIONS

A. Attention is directed to the General Conditions of the Contract, all Divisions of the Specifications and the Contract Drawings, all of which apply to this section.

B. Examine and coordinate all Contract Drawings and other section of the Specifications for requirements which affect work of this section whether or not such work is specifically mentioned in this section. Coordinate work with other trades to assure the steady progress of all work under the Contract.

1.02 SCOPE OF WORK

A. The Work under this Section consists of, but is not limited to:

1. Field staking the horizontal and vertical alignment of site improvements.

PART 2 - MATERIALS

2.01 LAYOUT AND STAKING

A. The Contractor shall be responsible for furnishing all stakes, pins, and grade markings as required to implement the work of layout and staking and shall make all field adjustments ordered by the Landscape Architect at no extra cost to the Owner.

B. Upon request by the Landscape Architect, the Contractor shall make available to the Owner survey instruments necessary to check proposed vertical and horizontal alignments at no extra cost.

C. All major site features, including courts, walls, play areas, paved areas, and biodetention basins shall be laid out by a Surveyor registered in the State of Massachusetts.

PART 3 - EXECUTION

3.01 SURVEY LAYOUT

A. The Contractor shall use the alignments shown on the Plans to obtain the alignment which shall be approved subject to field adjustments as ordered by the Landscape Architect.

B. The Contractor shall inform the Landscape Architect when the general layout is completed and shall not begin excavation until the various alignments are approved by

the Landscape Architect. Any discrepancies encountered in field conditions shall be reported to the Landscape Architect immediately.

C. The Contractor shall be responsible for maintaining the correct vertical and horizontal alignment of all elements, which responsibility shall not be waived by the Landscape Architect's approval of the basic layout and stakeout.

.

END OF SECTION

SECTION 01200

PROJECT MEETINGS

PART 1 - GENERAL

1.01 GENERAL PROVISIONS

A. Attention is directed to the General Conditions of the Contract, all Divisions of the Specifications, and the Contract Documents, all of which apply to work of this section.

1.02 SCOPE OF WORK

A. Attend project meetings to enable orderly review during progress of the Work, and to provide for systematic discussion of problems, as long as deemed necessary by the Landscape Architect throughout the construction period.

B. The Contractor's relations with his subcontractors and materials suppliers, and discussion relative thereto, are the Contractor's responsibility and normally are not part of Project Meetings content.

1.03 QUALITY ASSURANCE

A. For those persons designated by the Contractor to attend and participate in Project Meetings, provide required authority to commit the Contractor to solutions agreed upon in the Project Meetings.

1.04 MEETING NOTES

A. The Landscape Architect will compile minutes of each Project Meeting and furnish copies to the attendees, Contractor, and Owner before the next scheduled meeting.

PART 2 - NOT USED

PART 3 - EXECUTION

3.01 PRECONSTRUCTION MEETING

A. The Contractor shall arrange for a Preconstruction Meeting within 5 days after the award of contract, prior to commencing any work on site, in order to coordinate between him/herself, his/her Subcontractors, the Owner, and the Landscape Architect the procedures to be followed on the project.

B. Contractor is to coordinate attendance by authorized representatives of the Owner, the Contractor, site work subcontractors, and the Landscape Architect. Authorized representatives of the Owner include the City of Waltham Engineering Department, 119 School Street, Waltham, MA 02451-4596, (781) 314-3830, the City of Waltham Planning Department, 119 School Street, Waltham, MA (781) 314-3370 and the City of Waltham

Recreation Department, 510 Moody Street, Waltham, MA (781) 314-3475.

C. Minimum agenda: Data will be distributed and discussed on at least the following items:

1. Organizational arrangement of Contractor's forces and personnel, and those of subcontractors, materials suppliers and Owner.
2. Channels and procedures for communication.
3. Construction schedule, including sequence of critical work.
4. Contract Documents and revisions.
5. Processing of Shop Drawings and other data submitted to the Owner for review, including the process for reviewing water, sewer and drainage submittals.
6. Processing of Bulletins, field decisions, and Change Orders.
7. Procedures for safety, first aid, security, quality control, housekeeping, and related matters.
8. Submittal of Construction Fence layout.
9. Submittal of Progress Schedule, Tabulation of Submittals and Schedule of Values.

3.02 PROJECT MEETINGS

A. Frequency: Project Meeting shall in general be held at regular intervals not less frequently than once a week. Meetings will be chaired by the Landscape Architect.

B. Location: Project meetings will be held at the job site.

C. Attendance:

1. To the maximum extent practicable, assign the same person or persons to represent the Contractor at Project Meetings throughout the progress of the work.

2. Site work subcontractors, material suppliers, and others may be invited to attend those Project Meetings in which their aspect of the Work is involved.

D. Minimum Agenda:

1. Review progress of the Work since last meetings, including status of submittals for approval.

2. Identify problems which impede planned progress.

3. Develop corrective measures and procedures to regain planned schedule.

4. Complete other current business.

E. Revision to Minutes:

1. Unless published minutes are challenged in writing prior to the next regularly

scheduled Project Meeting, they will be accepted as properly stating the activities and decisions of the meeting.

2. Persons challenging published minutes shall reproduce and distribute copies of the challenge to all indicated recipients of the particular set of minutes.

3. Challenge to minutes shall be settled at the start of the next regularly scheduled meeting.

END OF SECTION

SECTION 01300

SUBMITTALS

PART 1- GENERAL

1.01 GENERAL PROVISIONS

A. Attention is directed to the General Conditions of the Contract, all Divisions of the Specifications, and the Contract Drawings, all of which apply to this section.

B. Consult the individual Sections of the Specifications for the specific submittals required under those sections and for further details and descriptions of the requirements.

1.02 SCOPE OF WORK

A. The scope of the work under this Specification section, without limiting the generality thereof, includes the furnishing of all labor material, equipment, services and incidentals necessary to complete all the work in accordance with the contract documents, which are intended to describe and provide for a finished piece of work.

B. The type of work includes the following without limiting the generality thereof:

1. Progress Schedules.
2. Schedule of Values.
3. Shop drawings.
4. Product Data.
5. Samples.

1.03 QUALITY ASSURANCE

A. Coordination of submittals:

1. Prior to each submittal, carefully review and coordinate all aspects of each item being submitted.

2. Verify that each item and the associated submittal conform in all respects with the specified requirements.

3. By affixing the Contractor's signature to each submittal, certify that this coordination has been performed.

B. Timeliness - The Contractor shall transmit each submittal to the Landscape Architect well in advance of performing related Work or other applicable activities, so that the installation shall not be delayed by processing times, including disapproval and re-submittal (if required), coordination with other submittals, testing, purchasing, fabrication, delivery, and similar sequenced activities. **Items with long lead times for orders such as site furnishings need to be submitted immediately**. No extension of

time will be authorized because of the Contractor's failure to transmit submittals to the Landscape Architect in advance of the Work.

1. Sequence - The Contractor shall transmit each submittal in a sequence which will not result in the approval having to be later modified or rescinded by reason of subsequent submittals which should have been processed earlier or concurrently for coordination.

C. Contractor's Review and Approval - Only submittals received from and bearing the stamp of approval of the Contractor will be considered for review by the Landscape Architect. Submittals shall be accompanied by a transmittal notice stating name of Project, date of submittal, "To" or "From" (Contractor, Subcontractor, Installer, Manufacturer, Supplier), Specification Section or Drawing No. to which the submittal refers, purpose (first submittal, re-submittal), description, remarks, distribution record, and signature of transmitter.

D. "Or-Equals", "or equal as approved" or "or approved equal" - On the transmittal, or on a separate sheet attached to the transmittal, the Contractor shall direct attention to any deviations including minor limitations and variations, from the Contract Documents. Do not assume that the materials, equipment, or methods will be approved as equal unless the item has been specifically so approved for this Work by the Owner.

1. The Contractor and all Subcontractors shall submit to the Landscape Architect for consideration of any Or-Equal substitution, a written point by point comparison containing the name and full particulars of the proposed product to the product named or described in the Contract Documents.

2. Such submittal shall in no event be made later than 30 calendar days prior to the incorporation of the item into the Work. In any case in which the time period specified in the Contract Documents from the Notice to Proceed to Substantial Completion is less than 30 days, this requirement can be waived by the Landscape Architect.

3. Upon receipt of a written request for approval of an Or-Equal substitution, the Landscape Architect shall investigate whether the proposed item shall be considered equal to the item named or described in the Contract Documents. Upon conclusion of the investigation, the Landscape Architect shall promptly advise that the item is, or is not, considered acceptable as an Or-Equal substitution. Such written notice must have the concurrence of the Owner.

4. In no case may an item be furnished on the Work other than the item named or described, unless the Landscape Architect, with the Authority's concurrence, shall consider the item equal to the item so named or described, as provided by M.G.L. c.30 § 39M.

5. The equality of items offered as "equal" to items named or described shall be proved to the satisfaction of the Landscape Architect at the expense of the Contractor or Subcontractor submitting the substitution.

6. The Landscape Architect and/or the Authority may require that full size samples of both the specified and proposed products be submitted for review and evaluation. The Contractor or Subcontractor, as the case may be, shall bear full cost for providing, delivering, and disposal of all such samples.

7. The Contractor or Subcontractor, as the case may be, shall assume full responsibility for the performance of any item submitted as an "Or-Equal" and assume the costs of any changes in any Work which may be due to such substitution.

E. Processing - All costs for printing, preparing, packaging, submitting, resubmitting, handling, inspecting and mailing, or delivering submittals required by this contract shall be included in the Contract Sum.

F. Unless otherwise indicated on the Contract Drawings, or specified, only new materials and equipment shall be incorporated into the Work. All materials and equipment furnished by the Contractor shall be subject to the inspection and approval of the Owner. No materials shall be delivered to the work without prior approval of the Owner.

G. Contractor represents that he has determined and verified all materials, field measurements, and field construction criteria related thereto, or will do so, and that he has checked and coordinated the information contained within such submittals with the requirements of the contract documents.

H. The inspection and approval by the Landscape Architect of shop drawings, product data, and samples is general and does not relieve the Contractor from responsibility for compliance with the requirements of the Contract or for proper dimensions, fitting, construction, and construction sequencing.

I. The Contractor or Subcontractors shall not be relieved of responsibility for any deviation from the Contract Drawings or Specifications unless the Contractor has specifically informed the Landscape Architect in writing of such deviation, and the Landscape Architect has given specific written approval thereof.

J. The Contractor shall submit to the Landscape Architect data relating to materials and equipment he proposes to furnish for the Work. Such data shall be in sufficient detail to enable the Landscape Architect to identify the particular product and to form an opinion as to its conformity to the Specifications. Submittals shall, at minimum, include the following:

1. Name of Manufacturer.
2. Dimensional requirements for the material.
3. Class and/or type of material.
4. Strength requirements for the material.
5. Sieve analysis of fill materials.
6. And any other information that is required in determining conformance of the

submittal with the Specifications or the Contract Drawings.

1.04 LANDSCAPE ARCHITECT'S ACTION

A. The Landscape Architect will review the Contractor's submittals and return them with one of the following actions recorded thereon by appropriate markings:

1. Final Unrestricted Release: Where marked “Approved” the Work covered by the submittal may proceed provided it complies with the requirements of the Contract Documents.

2. Final-But-Restricted Release: When marked “Approved as Noted” the Work may proceed provided it complies with the Landscape Architect's notations or corrections on the submittal and complies with the requirements of the Contract Documents. Acceptance of the Work will depend upon these compliances.

3. Returned for Resubmittal: When marked “Revise & Resubmit” or “Disapproved”, the Work covered by the submittal (purchasing, fabrication, delivery, or other activity) should not proceed. The submittal should be revised or a new submittal resubmitted without delay, in accordance with the Landscape Architect’s notations stating the reasons for returning the submittal.

1.05 PROGRESS SCHEDULES

A. At the Preconstruction Meeting, the Contractor shall submit a progress schedule in bar chart form. Indicate a time bar for each major category or unit of work to be performed, properly sequenced and coordinated with other elements of the work.

B. With the progress schedule, submit a tabulation of all submittals which will clearly show: the submittal name and section, date to Landscape Architect for review, date required back to Contractor to maintain the orderly progress of the work, and those submittals required early because of long lead time for ordering, manufacture or fabrication. The Contractor shall submit shop drawings, data and samples or place his/her order sufficiently early to permit consideration and approval by the Landscape Architect before materials are necessary for incorporation into the Work. Any delay resulting from the Contractor’s failure to do so shall not be used as a basis of a claim against the Owner.

C. Monthly, as the job progresses, submit updates of the original progress schedule to show actual progress on the job and any revisions to the projected completion date.

1.06 SCHEDULE OF VALUES

A. With the progress schedule, submit a schedule of values on an AIA “Request for Payment” form which breaks down the contract price by specification sections. This schedule of values shall be in reasonable correspondence with the Contractor’s actual costs for each Subcontract or trade, and it shall serve as the basis for the evaluation and

approval of monthly requests for Payment as they are submitted.

1.07 SHOP DRAWINGS

A. Shop drawings shall be complete. Give all information necessary or requested in the individual section of the specifications. They shall also show adjoining Work and details of connection thereto.

B. Shop drawings shall be for whole systems. Partial submissions will not be accepted.

C. The Landscape Architect reserves the right to review and approve shop drawings only after approval of related product data and samples. Shop drawings for water, sewer, and drainage will require review by the City Engineer.

D. Shop drawings shall be properly identified and contain the name of the project, name of the firm submitting the shop drawings, shop drawing number, date of shop drawings and revisions, Contractor's stamp of approval, and sufficient spaces near the title block for the Landscape Architect's stamp.

E. The Contractor shall submit to the Landscape Architect one legible original and two copies of each shop drawing. Transparency and prints shall be mailed or delivered in roll form. Each submittal shall be accompanied by a transmittal notice.

F. When the original is returned by the Landscape Architect with the stamp "Revise and Resubmit" or "Disapproved", the Contractor shall correct the original drawing or prepare a new drawing and resubmit the original and two copies thereof to the Landscape Architect for approval. This procedure shall be repeated until the Landscape Architect's approval is obtained.

G. When the original is returned by the Landscape Architect with the stamp "Approved" or "Approved as Corrected", the Contractor shall provide and distribute the copies for all Contractor and Subcontractors use, and in addition submit, within 10 calendar days after approval, 3 prints to the Landscape Architect.

H. The Contractor shall maintain one full set of approved shop drawings at the site.

1.08 SUBMISSION OF PRODUCT DATA

A. The Contractor shall submit 6 copies of Product Data to the Landscape Architect. All such data shall be specific and identification of material or equipment submitted shall be clearly marked in ink. Data of general nature will not be accepted.

B. Product Data shall be accompanied by a transmittal notice. The Contractor's stamp of approval shall appear on the printed information itself, in a location which will not mar legibility.

C. Product Data returned by the Landscape Architect as "Disapproved" shall be resubmitted in 6 copies until the Landscape Architects approval is obtained.

D. When the Product Data are acceptable, the Landscape Architect will stamp them "Approved" or "Approved as Corrected," retain 3 copies, and return 4 copies to the Contractor. The Contractor shall provide and distribute additional copies as may be required to complete the Work.

E. The Contractor shall maintain one full set of approved, original, Product Data at the site.

1.09 SUBMISSION OF SAMPLES

A. Unless otherwise specified in the individual section, the Contractor shall submit two specimens of each sample.

B. Samples shall be of adequate size to permit proper evaluation of materials. Where variations in color or in other characteristics are to be expected, samples shall show the maximum range of variation. Materials exceeding the variation of approved samples will not be approved in the Work.

C. Samples which can be conveniently mailed shall be sent directly to the Landscape Architect, accompanied by a transmittal notice. All transmittals shall be stamped with the Contractor's approval stamp of the material submitted.

D. All other samples shall be delivered to the project site with sample identification tag attached and properly filled in. Transmittal notice of samples so delivered with the Contractor's stamp of approval shall be mailed to the Landscape Architect.

E. If a sample is rejected by the Landscape Architect, a new sample shall be resubmitted in a manner specified hereinabove. This procedure shall be repeated until the sample is approved by the Landscape Architect.

F. Samples will not be returned unless return is requested at the time of submission. The right is reserved to require submission of samples whether or not particular mention is made in the Specifications.

END OF SECTION

SECTION 01400

QUALITY CONTROL

PART 1 - GENERAL

1.01 GENERAL PROVISIONS

A. Attention is directed to the General Conditions of the Contract, all Divisions of the Specifications and the Drawings, all of which apply to this section.

1.02 SCOPE OF WORK

A. The scope of the work under this Specification section, without limiting the generality thereof, includes the furnishing of all labor, materials, equipment, services, and incidentals necessary to complete all of the work in accordance with the Contract Documents, which are intended to describe and provide for a finished piece of work.

B. The work includes the following, without limiting the generality thereof;

1. The Contractor shall make available to the Owner's testing laboratory any samples or specimens which the laboratory may require to perform quality control testing on concrete, fill materials, or other material as the Owner may elect to provide additional testing for.

2. The coordinating and scheduling of work and the giving of timely notice so as to afford the Owner's testing laboratory the opportunity to take samples and make observations or tests.

1.03 TESTING LABORATORY

A. The Contractor is responsible for the costs of tests specifically required in the technical specifications.

B. The Owner may select, engage, and pay for the services of an independent testing laboratory to provide additional testing as the Landscape Architect/Engineer may deem appropriate.

C. Test and retesting of materials which fail the original test shall be paid for by the Contractor.

END OF SECTION

SECTION 01500

TEMPORARY FACILITIES & CONTROLS

PART 1- GENERAL

1.01 GENERAL PROVISIONS

A. Attention is directed to the General Conditions of the Contact, all Divisions of the Specifications and the Contract Drawings, all of which apply to this section.

1.02 SCOPE OF WORK

A. The scope of the work under this Specification section, without limiting the generality thereof, includes the furnishing of all labor, materials, equipment, services, and incidentals necessary to complete all of the work in accordance with the Contract Documents, which are intended to describe and provide for a finished piece of work.

B. The work includes the following, without limiting the generality thereof;

1. Temporary utilities.
2. Field equipment.
3. Barriers and enclosures.
4. Safety and security.
5. Signage.

1.03 TEMPORARY UTILITIES

A. The Contractor is responsible for all temporary electrical distribution, lighting, and water distribution from existing sources.

B. The Contractor shall provide and pay for his own temporary telephone service within the Contract Limit Line.

C. The provision for temporary toilets is included under Section 01010 - Summary of Work.

1.04 FIELD EQUIPMENT

A. The Contractor shall provide a transit, rod and level on site for checking layouts and installations.

1.05 TRAFFIC CONTROL

A. Traffic police will be required for operations within City streets. Refer to Section 01040 - Control of the Work, Section 1.05 for police requirements and cost and Section 01020 - Allowances for allowance to be included in the bid price.

1.06 BARRIERS AND ENCLOSURES

A. The Contractor shall provide and maintain sufficient fencing and warning signs around the work area to limit unauthorized entry within the Contract Limit Line.

B. At the earliest practical time provide temporary enclosure of materials, equipment, work in progress and completed portions of the work to provide protection to the work and employees.

1.07 SAFETY AND SECURITY

A. The Contractor shall be responsible for the safety and security of the site within the Contract Limit Line, and for the safety of all persons who enter within the Contract Limit Line.

1. Gates or other temporary openings in the fencing used to allow construction personnel or equipment access shall be maintained closed at all times to prevent access by the public.

B. The Contractor shall be responsible for initiating, maintaining, and supervising all safety precautions and programs in connection with the work.

C. The Contractor shall erect and maintain, as required by existing conditions and progress of the work, all reasonable safeguards for safety and protection, including posting danger signs and other warnings against hazards, promulgating safety regulations, and notifying the Owner of particular hazards.

1. Provide and install on the temporary fencing three (3) signs indicating temporary closure of the park, as described in Section 1.08 below.

D. The Contractor shall cooperate with and maintain a close liaison with the Police Department and Fire Departments, and he shall abide by safety-related requests from any of these agencies.

1.08 CLOSURE SIGNS

A. The three signs indicating temporary closing of the park closing shall be 18" x 30" minimum and shall contain the words “The Park is Closed During Construction for Your Safety. Please Do Not Enter. Thank You for Your Cooperation. Waltham Parks and Recreation Department”

B. Signs shall be of durable exterior grade painted plywood or metal securely mounted on posts or on fencing. Sign shall be professionally lettered and shall be produced by a professional sign shop or manufacturer.

END OF SECTION

SECTION 01571

ORDER OF CONDITIONS

PART I - GENERAL

1.01 SUMMARY

A. The work of this project lies within the 100 year floodplain and 100-foot buffer zone of Bordering Vegetated Wetlands both of which are under the jurisdiction of the Waltham Conservation Commission and the Massachusetts Department of Environmental Protection. The Waltham Conservation Commission has issued an Order of Conditions, DEP File No. 316-0717 which conditions the work of this project, a copy of which is included as Appendix A, and is a Special Condition of the Contract,

1. The Contractor shall be responsible for reading the Order of Conditions and being familiar with each and every condition which has been set forth.

2. The Contractor shall contact the Waltham Conservation Commission (781-314-3845) after erosion controls, signage, and other required elements are in place, to arrange for a site inspection by the Conservation Commission, prior to any excavation or other construction activities.

3. The Contractor shall be responsible for satisfying the provisions of the Order of Conditions including but not limited to the following:

(a) Signage requirements
(b) Maintenance of existing wetland flags throughout the duration of the project
(c) Erosion, drainage and sedimentation controls
(d) Cooperation with the Conservation Commission inspections.

(1) Designation of a person responsible for supervising and inspecting drainage and erosion controls available on a 24-hour basis to communicate with the Conservation Commission. Provide the name, address, business & home phone number of the project supervisor to the Landscape Architect to forward to the Commission.

4. The Order of Conditions is included as part of the Contract Documents, in Appendix A.

PART II - PRODUCTS (Not Used)

PART III - EXECUTION (Not Used)

END OF SECTION

SECTION 01700

PROJECT CLOSE-OUT

PART 1- GENERAL

1.01 GENERAL PROVISIONS

A. Attention is directed to the General Conditions of the Contract, all Divisions of the Specifications and the Drawings, all of which apply to this section.

B. Project close-out procedures are subject to the requirements of M.G.L. Chapter 30, Section 39G.

1.02 SCOPE OF WORK

A. The scope of work under this Specification section, without limiting the generality thereof, includes the furnishing of all labor, materials, equipment, services, incidentals necessary to complete all of the work in accordance with the Contract Documents, which are intended to describe and provide for a finished piece of work.

B. The type of work includes the following, without limiting the generality thereof:

1. Final Cleaning.
2. Substantial Completion
3. Recording as-built information and coordination with others to produce final As-Built Drawings..
4. As built topographic survey for submission to Conservation Commission.
5. Warranties.
6. Operating and Maintenance Manuals: Provide one copy to City of Waltham Recreation Department and one copy to City of Waltham Engineering Department, Water/Sewer Division.
7. Final Completion.

1.03 FINAL CLEANING

A. Immediately prior to Substantial Completion of the work, the Contractor shall perform all cleanup work as follows:

1. Remove all waste materials and rubbish from the site and legally dispose of it.

2. Remove all tools, equipment, machinery, surplus material, temporary enclosures, and any other material belonging to the Contractor or his Subcontractors.

3. Clean all surfaces, fixtures, and equipment within the work areas, and any surfaces outside the work area which have been made dirty by the work of the contract. Leave the entire site clean and ready for use.

1.04 SUBSTANTIAL COMPLETION

A. Related Requirements: The Contractor's attention is directed to the General and Supplementary Conditions of the Contract and M.G.L. Chapter 30, Section 39G for additional information covering substantial completion procedures and payments.

1. Substantial Completion is defined in MGL 149 Section 39G, excerpts of which are included in Attachment B, Section 00830 of Division 0.

B. Upon Substantial Completion of the project, the Contractor shall present written certification that the work is substantially complete. The Landscape Architect will promptly, and in no case later than 21 days after the Contractor's certification, respond in writing declaring the work has reached Substantial Completion, or he shall provide an itemized list of incomplete or unsatisfactory items that must be completed to achieve Substantial Completion.

C. Within 65 days after the effective date of a declaration of substantial completion, the Landscape Architect will send the Contractor a Substantial Completion estimate, which will be the balance of the Contract price minus a one percent retention for final completion, amounts to cover any outstanding claims, any amounts estimated to cover incomplete or unsatisfactory work, and the sum of all demands for direct payment made by Subcontractors.

1. Refer to MGL 149 Section 39G for additional information concerning payment, excerpted in Division 0, Section 00830-B.

1.05 AS-BUILT RECORD DRAWINGS (Electronic and Hard-copy)

A. General: The Contractor is responsible for As-Built record drawings and for providing final As-Built drawings in electronic format at the project close-out. Do not use As-Built Record Drawings for construction purposes. Protect As-Built Record Drawings from deterioration and loss. Provide access to As-Built Record Drawings for Architect's and Owner's reference during normal working hours.

1. As-Built Record Drawings: Maintain and submit one set of black-line white prints of As-Built Record Contract Drawings and Shop Drawings.

(a) Mark As-Built Record Prints to show the actual installation where installation varies from that shown originally. Require individual or entity who obtained record data, whether individual or entity is Installer, Subcontractor, or similar entity, to prepare the marked-up As-Built Record Prints.

(1) Give particular attention to information on concealed elements that cannot be readily identified and recorded later.

(2) Accurately record information in an understandable drawing

technique.

(3) Record data as soon as possible after obtaining it. Record and check the markup before enclosing concealed installations.

(4) Mark Contract Drawings or Shop Drawings, whichever is most capable of showing actual physical conditions, completely and accurately. Where Shop Drawings are marked, show cross-reference on Contract Drawings.

(b) Mark as-built record sets with erasable, red-colored pencil. Use other colors to distinguish between changes for different categories of the Work at the same location.

(c) Mark important additional information that was either shown schematically or omitted from original Drawings.

(d) Note Construction Change Directive numbers, Change Order numbers, alternate numbers, and similar identification where applicable.

(e) Identify and date each As-Built Record Drawing; include the designation "PROJECT AS-BUILT RECORD DRAWING" in a prominent location. Organize into manageable sets; bind each set with durable paper cover sheets. Include identification on cover sheets.

2. The Landscape Architect will provide the Contractor with an Autocad file of the site plan. The Contractor shall edit the file to provide the City of Waltham with an electronic as-built drawing file at the close-out of the project.

3. Record Specifications: Submit one copy of Project's Specifications, including addenda and contract modifications. Mark copy to indicate the actual product installation where installation varies from that indicated in Specifications, addenda, and contract modifications.

(a) Give particular attention to information on concealed products and installations that cannot be readily identified and recorded later.
(b) Mark copy with the proprietary name and model number of products, materials, and equipment furnished, including substitutions and product options selected.
(c) Note related Change Orders, As-Built Drawings**,** and Product Data, where applicable.

4. Record Product Data: Submit one copy of each Product Data submittal. Mark one set to indicate the actual product installation where installation varies substantially from that indicated in Product Data.

(a) Give particular attention to information on concealed products and installations that cannot be readily identified and recorded later.

(b) Include significant changes in the product delivered to Project site and changes in manufacturer's written instructions for installation.
(c) Note related Change Orders, As-Built Drawings**,** and Record Specifications, where applicable.

1.01 WARRANTIES

A. Submittal Time: Submit written warranties on request of the Landscape Architect for designated portions of the Work where commencement of warranties other than date of Substantial Completion is indicated.

1. Organize warranty documents into an orderly sequence based on the table of contents of the Project Manual.

(a) Bind warranties and bonds in heavy-duty, 3-ring, vinyl-covered, loose-leaf binders, thickness as necessary to accommodate contents, and sized to receive 8-1/2-by-11-inch paper.
(b) Provide heavy paper dividers with plastic-covered tabs for each separate warranty. Mark tab to identify the product or installation. Provide a typed description of the product or installation, including the name of the product and the name, address, and telephone number of Installer.
(c) Identify each binder on the front and spine with the typed or printed title "WARRANTIES," Project name, and name of Contractor.

2. Provide additional copies of each warranty to include in operation and maintenance manuals. At Substantial Completion of the project, the Contractor shall deliver to the Landscape Architect copies of all warranties for the various materials and pieces of equipment included in the project. These warranties shall be submitted in duplicate and shall be bound together with the operating and maintenance data called for above.

1.02 OPERATION AND MAINTENANCE MANUALS

A. Assemble a complete set of operation and maintenance data indicating the operation and maintenance of each system, subsystem, and piece of equipment not part of a system. Include operation and maintenance data required in individual Specification Sections and as follows:

1. Operation Data:

(a) Emergency instructions and procedures.
(b) System, subsystem, and equipment descriptions, including operating standards.
(c) Operating procedures, including startup, shutdown, seasonal, and weekend operations.
(d) Description of controls and sequence of operations.
(e) Piping diagrams.

2. Maintenance Data:

(a) Manufacturer's information, including list of spare parts.
(b) Name, address, and telephone number of Installer or supplier.
(c) Maintenance procedures.
(d) Maintenance and service schedules for preventive and routine maintenance.
(e) Maintenance record forms.
(f) Sources of spare parts and maintenance materials.
(g) Copies of maintenance service agreements.
(h) Copies of warranties and bonds.

B. Organize operation and maintenance manuals into suitable sets of manageable size. Bind and index data in heavy-duty, 3-ring, vinyl-covered, loose-leaf binders, in thickness necessary to accommodate contents, with pocket inside the covers to receive folded oversized sheets. Identify each binder on front and spine with the printed title "OPERATION AND MAINTENANCE MANUAL," Project name, and subject matter of contents.

1.03 FINAL COMPLETION

A. Related Requirements: The Contractor’s attention is directed to the General and Supplementary Conditions of the Contract and M.G.L. Chapter 30, Section 39G covering closeout and final payment procedures.

B. Final Completion:

1. Within fifteen (15) days of the effective declaration of Substantial Completion, the Landscape Architect will send the Contractor by certified mail, return receipt requested, a complete final punch list of all incomplete or unsatisfactory work items necessary to achieve Final Completion.

(a) If the Contractor fails to complete such work within forty-five (45) days after receipt of the list, or by the contractual completion date, whichever is later, the awarding authority may, subsequent to seven (7) days written notice to the Contractor, terminate the Contract and complete the incomplete or unsatisfactory work items and charge the cost of same to the Contractor.

2. The Contractor shall notify the Landscape Architect when the work is completed. The Landscape Architect will promptly make an inspection, and in no case later than thirty (30) days after notification by the Contractor that the work is complete, send the Contractor a final estimate for the Contract balance due, holding back any amount estimated to cover work which is still incomplete or unsatisfactory.

3. Upon completion of all remaining items, and after receipt of all appropriate

Record Specifications, Record Product Data, Operating and Maintenance Manuals, Warranties, Guarantees and any Spare Parts as required by the Contract Documents, the Contractor shall provide a notarized Contractor's Certificate and Release and a final Application for Payment to the Owner to complete the close-out process.

END OF SECTION

Division 2

SECTION 02100

SITE PREPARATION AND DEMOLITION

PART 1 - GENERAL

1.01 GENERAL PROVISIONS

A. All of the Contract Documents, including the Contract Form, General Provisions, General Conditions, Supplemental Conditions, and all Attachments to the General Provisions, and Division 1 - General Requirements, apply to the work of this Section.

B. Contact Dig-Safe (811) seventy-two hours prior to the start of any removals or excavation work, and obtain a Certificate verifying that marking the location of utilities has been completed. Contact the City of Waltham Engineer to verify the location of additional on-site utilities. Coordinate demolition work with utility companies. Dig-safe does not locate telephone and cable lines; contact the specific utilities involved for this information.

C. Notify the Landscape Architect one week prior to removing trees scheduled to be demolished.

1.02 SCOPE OF WORK

A. Provide all equipment and do all work necessary to prepare the site complete, as indicated on the Drawings and as specified.

B. The work shall include, but is not limited to, the following:

1. Marking the location of utilities within the Limit of Work Line.

2. Demolition of items indicated on the Drawings and removal of incidental site items not indicated on the site plan which will impede proposed construction.

3. Protection of existing site elements to remain.

4. Evaluation and protection of 24" drain line noted on the Drawings.

5. Provision of a 6’ height temporary chain link fence enclosing the site during construction.

1.03 RELATED WORK

A. Section 01050 - Field Engineering: Layout of site improvements.
B. Section 01500 - Temporary Facilities and Controls.
C. Section 02150 – Existing Trees to Remain
D. Section 02200 - Earthwork.

1.04 SUBMITTALS

A. Copies of required permits.
B. Provide certificate verifying marking of utilities thru Dig-safe.

C. Submit shop drawing or description of temporary signs including text, for approval by the Landscape Architect, prior to their installation.

1.05 REFERENCES

A. All work shall comply with the minimum standards of the latest editions of the following codes and specifications, subject to modifications and amendments outlined herein.

1. MHD: "Standard Specifications for Highways and Bridges", Department of Public Works, Commonwealth of Massachusetts, latest edition.
2. Federal, State and/or Municipal Codes.
3. Public Safety Codes.
4. U.S. Public Health Service.
5. National Electric Manufacturers Association.
6. American National Standards Institute.
7. American Society of Mechanical Engineers.
8. Commercial Standards.
9. Federal Specifications.
10. Occupational Safety and Health Regulations.
11. Americans with Disabilities Act Guidelines (ADAAG) for Building and Facilities, 36 CFR Part 1191.
12. MAAB CMR 521 Regulations.
13. National Arborist Association Standards, National Arborist Association, 124 Route 101, Bedford, NH 03102.
14. OSHA Construction Regulations Title 29 CFR Part 1926.

1.06 EXAMINATION OF SITE AND DOCUMENTS

A. The Contractor shall inform him/herself of existing conditions of the site before submitting his/her bid. No claim for extra compensation or extension of contract time will be allowed on account of conditions which are apparent from a thorough visual examination of the site.

1.07 MAINTENANCE OF ACCESS ON SIDEWALKS AND ROADS

A. The Contractor shall not close or obstruct any portion of street or sidewalk without obtaining permits therefor from the proper municipal authorities. Streets and sidewalks shall be maintained passable by the Contractor at his own expense, and the Contractor shall assume full responsibility for the adequacy and safety of provisions made. He shall conduct construction operations such that interference with the flow of vehicular and pedestrian traffic is held to a minimum.

B. The Contractor shall coordinate with the City Fire and Police at all times. The Contractor shall notify the Waltham Fire Department and Waltham Police Department when any street or any portion of the traveled way is to be closed regardless of the length of time

or day. No street shall be closed without the approval of the Consolidated Public Works Department of the City of Waltham.

C. Keep all adjacent streets and sidewalks swept clean at all times. Cleanup operations not performed in a timely manner will be performed by the City of Waltham and back-charged to the Contractor.

1.08 PERMITS AND CODES

A. All work shall be as shown in the Contract Drawings and Specifications and shall comply with applicable codes and regulations at the local, county, state, and federal levels. All labor, materials, equipment and services necessary to make the Work comply with such requirements shall be provided without additional cost to the Owner.

B. The Contractor, under this Section, shall be responsible for providing and filing all Plans, Specifications and other documents, pay all requisite fees and secure all permits, inspections and approvals necessary for legal installation and operation of the systems and or equipment finished under this Section.

1.09 TRAFFIC POLICE

A. Traffic police will be required for operations within City streets. Refer to Section 01040 - Control of the Work, Section 1.05 for police requirements.

1.10 CONDITIONS OF WORK

A. The Work of this Project is subject to an Order of Conditions issued by the Waltham Conservation Commission, included in the Contract as Appendix A.

B. The Work of this Project is subject to the restrictions of the City of Waltham Noise Ordinance. Refer to Section 01010 - Summary of Work, Section 1.07.

C. Conduct the work giving consideration to protection of the public, protection of the existing work from weather; control of noise, shocks, and vibration; control of dirt and dust; orderly access and storage of materials; protection of existing buildings; protection of adjacent buildings and property. Coordinate work and cooperate with the Owner and Landscape Architect at all times.

D. Schedule site preparation and removal work in connection with the progress schedule required by the General Conditions.

E. The Site Preparation / Demolition Plan endeavors to describe the scope and intent of Work. No guarantee is expressed or implied that the Site Preparation and Demolition Plan describes the full extent of objects to be removed in order to facilitate construction. Site Preparation operations not specifically identified on the Contract Drawings shall be considered as part of the basic lump sum contract and do not qualify as extra work.

F. All other work requiring removal, such as fence, tree roots and former buried footings shall be removed and discarded as required for proper construction of new work without additional cost to the Owner.

G. No extra demolition shall be performed without first notifying and obtaining written approval of the Landscape Architect.

1.11 PROTECTION AND VIDEO SCOPING OF EXISTING 24" DRAIN LINE

A. Requirements prior to construction

1. Flag the entire alignment of the 24” drain line prior to construction activities.

2. Video-camera evaluation of condition of line

(a) The Contractor shall arrange and pay for a real-time and recorded high resolution video camera inspection of the entire length of the line to establish its condition, prior to construction.

(b) Notify the Waltham Engineering Department prior to video inspection.

(c) Provide recorded video and evaluation to Waltham Engineering Department.

3. The Waltham Engineering Department will make any necessary repairs to the pipe prior to construction and demolition in the area.

4. Do not begin construction in the area of the line until approval by the Waltham Engineering Department.

B. Construction over or near the line

1. The Contractor shall exercise extreme caution working on or near the drain-line. The line is known to be 1’ below the surface in some locations.

2. Do not allow construction equipment or vehicles over the line.

3. Where trees over the line, or in the vicinity of the line, are scheduled for removal, cut trunk as close to the ground as possible. Do not remove stumps.

4. Hand excavation may required in the vicinity of the 24” line in order to demolish existing site improvements.

1.12 DRAINAGE AND EROSION CONTROL

A. Upon entry to the site, the Contractor shall assume responsibility for site and subsurface drainage. During the Contract period the Contractor shall maintain drainage in a manner satisfactory to the Landscape Architect. At all times, the adjacent areas shall be protected and maintained in their existing conditions.

B. It shall be the responsibility of the Contractor to render the site erosion-free, at all times during the Contract period. The Contractor shall take special precautions to prevent erosion run-off from slopes, drainage trenches, granular bases, structures, and other improvements. Unless otherwise indicated on the Drawings, hay bales, jute mesh, catch basin insert filtration bags, and siltation fabrics shall be used, as determined by the Landscape Architect.

1.13 DELIVERY, STORAGE AND HANDLING

A. Materials shall be stored in a dry location, off the ground and in such manner as to prevent damage, intrusion of foreign matter and weather. All materials which have become damaged or otherwise unfit for use during delivery or storage shall be replaced at the expense of the Contractor.

PART 2 - PRODUCTS

2.01 LAYOUT AND STAKING

A. Refer to Section 01050 - Field Engineering for layout and staking requirements.

2.02 DUST CONTROL

A. The Contractor shall provide a source of water for dust control either a water truck on-site or permitted connection to City fire hydrant throughout the period of construction.

B. Water for dust control shall be free from contaminants hazardous to human health and plant growth. No calcium chloride may be used.

PART 3 - EXECUTION

3.01 LOCATING UTILITIES & SITE ITEMS AFFECTING THE WORK

A. Prior to site preparation and removals operation, the Contractor shall locate and mark all site items such as utilities which could be affected by site preparation and removals.

B. Contact Dig-Safe (1-888-344-7233) seventy-two hours prior to the start of any removals or excavation work, and obtain a Certificate verifying that marking the location of utilities has been completed. Contact the City of Waltham Engineering Department to verify the location of additional on-site utilities. Coordinate demolition work with utility companies. Dig-safe does not locate telephone and cable lines; contact the specific utilities involved for this information.

3.02 PROJECT CONDITIONS

A. All apparatus, storage and the operation of work people in connection with activities under this Section shall be confined within the property lines of the park shall not encumber areas outside the site.

B. Thoroughly wet down exposed earth during demolition to prevent the spread of dust. Avoid flooding or contaminated run-off.

1. Continue dust control operation as necessary and as directed by the Landscape Architect throughout the construction period until all disturbed areas have been permanently stabilized.

C. All existing items to remain which are damaged by the Contractor will be repaired or replaced at the Contractor's expense. Replacement or repaired items shall be equal to new items as specified.

D. The Contractor shall be responsible for the methods used in this work including properly protecting against damage to existing and proposed site improvements, structures, site features, utility lines, trees, lawns, etc. Check with municipality and local utility companies for locations of existing utilities which may be in use or abandoned. Investigate and ascertain that underground utilities are correctly located and that they have been shut off and/or abandoned before disturbing them.

3.03 PROTECTION

A. The Contractor shall assume complete responsibility and liability for the safety and structural integrity of all work and utilities to remain during the performance of all work.

B. The Contractor shall provide safeguards including, but not limited to, warning signs, barricades, temporary construction fences, warning lights and other items required for protection of personnel and the general public during the performance of all work.

C. The Contractor shall provide barricades for substantial construction in accordance with safety regulations of authorities having jurisdiction and insurance requirements.

D. All features related to protection shall be maintained until that unit of work has been completed to the point that the danger no longer exists.

3.04 CLEARING AND GRUBBING

A. Remove obstructions, trees, shrubs, grass, and other vegetation to permit installation of new construction, and in areas indicated on the Drawings.

B. Tree stumps shall be removed in their entirety including tap roots where applicable.

C. Fill depressions caused by clearing and grubbing operations with satisfactory soil material, unless further excavation or earthwork is indicated.

3.05 PAVING

A. The line between existing pavement to be removed and existing pavement to remain

shall be cut neatly saw-cut through full depth of pavement section so as to leave a smooth, straight and vertical edge. Cut to the dimensions given or directed. Remove the portion behind the cut with proper tools.

1. Existing pavement which is damaged, disturbed or settled by construction operations shall be cut back by the same method and replaced as directed by the Landscape architect at no additional cost to the Owner.

3.06 LAWN AND FIELD AREAS

A. Strip lawn areas and stockpile topsoil for re-use. At the end of construction, remove and legally dispose of off-site, any excess quantity of topsoil or earth.

3.07 FOOTINGS & MISCELLANEOUS SITE ITEMS

A. Footings & miscellaneous site items shall be removed in their entirety and legally disposed of. Holes resulting from demolition shall be backfilled and compacted in accordance with Section 02200 Earthwork.

3.08 CLEANUP

A. Keep work areas free from accumulation of debris during the work under this Section and leave the premises in a clean condition after completion of the Work of this Section.

B. At the completion of the work of this Section, properly and legally dispose of all items removed and not scheduled to remain, including surplus soil material, unsuitable topsoil, demolished materials, and waste materials including trash and debris, and any other waste materials in connection with the work under this Section and leave the premises in a clean condition.

SECTION 02150

EXISTING TREES TO REMAIN

PART 1 - GENERAL

1.01 GENERAL PROVISIONS

A. All of the Contract Documents, including the Contract Form, General Provisions, General Conditions, Supplemental Conditions, and all Attachments to the General Provisions, and Division 1 - General Requirements, apply to the work of this Section.

B. This Section specifies requirements for maintaining existing trees, before, during and after construction.

1. The Contractor's attention is directed to the protection of all existing trees within the project area.

2. No construction activity shall occur on-site before tree protective fencing has been installed.

3. No pruning or removal of tree limbs shall be allowed to provide clearance for construction work unless approved by the City of Waltham Tree Warden.

1.02 REFERENCE STANDARDS

A. National Arborist Association Pruning Standards for Shades Trees (1988 Revision)

1.03 QUALITY ASSURANCE

A. Work under this Section is subject to inspection by the City of Waltham Tree Warden and shall be done to his satisfaction.

B. Pruning and aeration of trees shall be done by or under the direct supervision of a Massachusetts Registered Arborist.

C. Notify the Landscape Architect at least one week before trees are scheduled for pruning.

PART 2 – PRODUCTS

2.01 TREE PROTECTION FENCE

A. Trees shall be protected by temporary moveable 6' height chain link fence, dimensioned as shown on the Drawings.

B. Cover area within tree enclosure with 3" depth of mulch.

C. Tree protection fence is minimal area required to protect trunk and branches and does not define the full extent of tree canopy. No materials shall be stockpiled or vehicles parked or driven within the tree canopy, unless it is necessary to install site improvements in that area. This area is delineated on the Drawings.

2.02 ACTIVITES WHICH ARE PROHIBITED WITHIN THE TREE CANOPY (DRIP-LINE)

A. Parking or driving of equipment, machinery, and stockpiling of materials.

B. Dumping of any liquid waste such as paint thinner from cleaning brushes, wash-out materials from cleaning equipment, or debris of any kind.

PART 3 – EXECUTION

3.01 GRADING OPERATIONS AT EXISTING TREES TO REMAIN

A. Where grading work is required within the drip-line or canopy of existing trees to remain:

1. Notify the Landscape Architect prior to excavating in these areas.

2. Deep water tree to a depth of 12” one week prior to grading operations, and immediately after grading operations are complete.

B. When excavating or trenching with the drip-line, hand dig in a manner which will cause minimum damage to roots systems.

C. Cut roots cleanly and to a depth 3” below finished grade. Do not cut tree roots over 2 inches in diameter unless approved by the Landscape Architect or Tree Warden.

D. Prune injured roots clean and backfill as soon as possible.

3.02 WATERING OF EXISTING TREES TO REMAIN DISTURBED BY CONSTRUCTION

A. All existing trees whose canopy has been disturbed by construction, by grading and/or installation of paving or walls, shall be watered throughout the construction period.

1. The Contractor shall maintain at the site at all times a watering truck or permitted connection to a fire hydrant for the purpose of tree watering through the months of June through September and additional periods as determined by the Landscape Architect.

2. Watering of trees disturbed by construction shall consist of deep watering (12”-24” depth) monthly, and additionally as directed by the Landscape Architect or Tree Warden.

3.03 PRUNING EXISTING TREES TO REMAIN

A. All existing trees shall be pruned after substantial completion of construction.

B. Pruning shall be done by or under the direct supervision of a registered Arborist.

C. Removal of limbs which are 6” in diameter or greater is prohibited without consent of the City Tree Warden.

D. Pruning shall be done to the satisfaction of the City of Waltham Tree Warden and shall consist of the following for each tree:

1. Corrective Pruning/Crown Cleaning/Fine Pruning

a. Removal of dead, dying, diseased, decaying, interfering, objectionable, obstructing and weak branches. An occasional undesirable branch up to one-half inch in diameter may remain within the main leaf area to its full length when it is not practicable to remove it.

2. Crown Raising: Remove limbs of any tree within 5’ of sidewalks or walks to a height of 80” above finished grade.

END OF SECTION

SECTION 02200

EARTHWORK

PART 1 - GENERAL

1.01 GENERAL PROVISIONS

A. All of the Contract Documents, including the Contract Form, General Provisions, General Conditions, Supplemental Conditions, and all Attachments to the General Provisions, and Division 1 - General Requirements, apply to the work of this Section.

B. Contact Dig-Safe (811) seventy-two hours prior to the start of any removals or excavation work, and obtain a Certificate verifying that marking the location of utilities has been completed. Contact the City of Waltham Engineer to verify the location of additional on-site utilities. Coordinate earthwork with utility companies.

1.02 SCOPE OF WORK

A. Work under this Section shall include all labor, materials, services, equipment, transportation and accessories and the performance of all operations necessary to complete the work of this Section, as indicated on the Contract Drawings and as specified herein.

B. The work shall include, but is not limited to, the following:

1. Furnishing and installing base courses for paving
2. Miscellaneous fill for footings and slabs.
3. Site grading. For grading within the dripline of existing trees to remain, refer to Section 02150 – Existing Trees to Remain.
4. Final grading of fields & lawn areas with laser-controlled equipment

1.03 RELATED WORK

A. Section 02100 - Site Preparation & Demolition
B. Section 02150 – Existing Trees to Remain
C. Section 02510 - Bituminous Concrete Paving
D. Section 02515 – Unit Pavers
E. Section 02540 - Safety Surfacing
F. Section 02800 - Site Furnishings
G. Section 02950 - Planting

1.04 REFERENCES

A. All work shall comply with the minimum standards of the latest editions of the following codes and specifications, subject to modifications and amendments outlined herein.

1. MHD: “Standard Specifications for Highways and Bridges”, Department of Public

Works, Commonwealth of Massachusetts, Latest Edition.

2. ASTM: American Society of Testing Materials.
3. AASHTO: American Association of State Highway and Transportation Officials.
4. ANSINFPA: American National Standards Institute, National Fire Protection Act.
5. Federal, State and/or Municipal Codes.
6. Public Safety Codes.
7. U.S. Public Health Service.
8. National Electric Manufacturers Association.
9. Commercial Standards.
10. Occupational Safety and Health Regulations.
11. OSHA Construction Regulations Title 29 CFR Part 1926.

1.05 EXAMINATION OF SITE AND DOCUMENTS

A. By submitting a bid the Contractor affirms that he/she has carefully examined the site and conditions affecting Work under this Section. No claim for additional costs will be allowed because of lack of full knowledge of existing conditions which can be reasonably inferred from visual inspection of the site.

1.06 SUBMITTALS

A. Submit to the Landscape Architect:

1. A representative sample of approximately 5 pounds for each type of fill material.

2. Supplier's or laboratory sieve analysis for each type of fill material demonstrating compliance with the Specifications.

3. Manufacturer's requirements for graduation of the crushed stone base course for safety surfacing, listing the sieve graduations required.

4. Name of soils testing laboratory for compaction tests.

5. Results of the Modified Proctor laboratory test for crushed stone base course subgrade fill under safety surfacing.

6. Results of field compaction tests for safety surfacing base course and subgrade.

1.07 COMPACTION TESTING

A. The Contractor shall pay for an independent laboratory, subject to the approval of the Landscape Architect, to provide testing of compaction as follows:

1. Maximum density and optimum water content determination by the ASTM D-1557-09 or AASHTO T-180 Modified Proctor laboratory test for “Suitable Backfill” for the subgrade and crushed stone base for safety surfacing.

2. On-site: Provide one field density test of the subgrade, and one field density test of in each compacted layer of stone base course layer, in 4 separate locations within playground area. Locations shall be chosen by the Landscape Architect.

1.08 PERMITS AND CODES

A. All work shall be as shown in the Contract Drawings and Specifications and shall comply with applicable codes and regulations at the local, county, state, and federal levels. All labor, materials, equipment and services necessary to make the Work comply with such requirements shall be provided without additional cost to the Owner.

1. OSHA Construction Regulations Title 29 CFR Part 1926.

B. The Contractor, under this Section, shall be responsible for providing and filing all Plans, Specifications and other documents, pay all requisite fees and secure all permits, inspections and approvals necessary for legal installation and operation of the systems and or equipment furnished under this Section.

C. The Contractor shall include in his/her bid any charges by the Water Department, Utility Company, or other authorities for work done by them and charged to the Contractor.

1.09 CONDITIONS OF WORK

A. Conduct the work giving consideration to protection of the public, protection of the existing work from weather; control of noise, shocks, and vibration; control of dirt and dust; orderly access and storage of materials; protection of existing buildings; protection of adjacent buildings and property. Coordinate work and cooperate with the Owner and Landscape Architect at all times.

B. Schedule earthwork in connection with the progress schedule required by the General Conditions.

1.10 DISPOSITION OF EXISTING UTILITIES

A. Site information: No representations are made indicating subsurface conditions. It is expressly understood that the Owner/Landscape Architect will not be responsible for interpretations or conclusions drawn therefrom by the Contractor.

B. Existing Utilities

1. Before starting earthwork, locate existing underground utilities in areas of work. If utilities are to remain in place, provide adequate means of support and protection during earthwork operations.

2. Should uncharted, or incorrectly charted, piping or other utilities be encountered during excavation, notify the Landscape Architect and Owner, and

consult utility Owner immediately for directions. Cooperate with Owner and utility companies in keeping respective services and facilities in operation. Repair damaged utilities to satisfaction of utility Owner.

3. Do not interrupt existing utilities serving facilities occupied or used by Owner and others, during occupied hours, except when permitted in writing by Owner and then only after acceptable temporary utility services have been provided. Provide minimum of 48 hour notice to Owner, and receive written notice to proceed before interrupting any utility.

4. Inactive utilities encountered or utilities abandoned during construction operations shall be removed, plugged or capped. The location of such utilities shall be noted on Record Drawings and reported in writing to the Landscape Architect.

1.11 DEFINITIONS

A. Fill and backfill shall be, for the purpose of this Specification, considered interchangeable terms and shall mean material to be used to bring existing or construction grades up to finish subgrade levels.

B. The words “finish grade” as used herein mean the required final grade elevations indicated on the Contract Drawings. Where not otherwise directed, areas outside buildings shall be given uniform slopes between points for which finish grades are shown, or between such point and existing grade, except that vertical curves or roundings shall be provided at abrupt changes in slope.

C. The word “subgrade” as used herein, means the required surface of subsoil, borrow fill or compacted fill.

D. “Trench shall be defined as an excavation of any length where the width is less than twice the depth. All other excavations shall be classified as open.

E. "Unsuitable Materials” shall include the following:

1. Pavements, utility structures, building foundations and other manmade structures.

2. Peat, muck, organic silt and other organic materials subject to decomposition, consolidation or decay.

3. Miscellaneous fill including cinders, ash, glass, wood, masonry and metal.

4. Ledge and boulders except as specified herein for fills.

PART 2 - PRODUCTS

2.01 SOIL MATERIALS

A. Ordinary Borrow

1. Ordinary Borrow shall be used whenever fill or backfill is indicated on the Drawings, and to fill to achieve required subgrades.

2. Ordinary Borrow shall conform to Ordinary Borrow as defined by the Massachusetts Standard Specifications for Highways and Bridges, M1.01.0.

   a. This material shall have the physical characteristics of soils designated as group A-1, A-2-4 or A-3 under AASHTO-M145.

   b. Ordinary fill shall be a natural soil, well-graded and free from all organic weak, compressible, and frozen materials, and shall contain no stone larger than two (2) inches in maximum dimension. It shall be of such nature and character that it can be dried and compacted and shall be free of all expansive materials (such as high plastic clays) and of materials subject to decay, decomposition, or dissolution, and shall conform to the following gradations:

U.S. Sieve No.	% Passing by Weight
2 inch	100%
#4	20-75%
#40	0-25%
#200	0-5%

3. Material from excavation on the site meeting the above requirements as evidenced by testing may be used as “Suitable backfill” provided it has not been contaminated with unsuitable material.

B. Dense grade leveling course under bituminous concrete paving shall conform to "Dense Grade Leveling Course" M2.01.7 of the Mass Standard Specifications for Highways and Bridges with the following gradation:

Sieve Designation	Percent Passing
2 inch	100
1-½ inch	70-100
3/4 inch	50-85
No. 4	30-55
No. 50	8-24
No. 200	3-10

C. Aggregate Base Course, Aggregate Backfill & Gravel:

1. Where Aggregate Base Course, Aggregate Backfill or Gravel is indicated on the Drawings, this material shall conform to the requirements of M1.03.0 Gravel Borrow, Type C of the MHD Standard Specifications except that the largest stone dimension shall be one and one-half (1-1/2) inch. Gravel shall consist of

inert material which is hard durable stone and coarse sand; free from loam, clay, organic material, surface coatings, trash, frozen materials and deleterious materials. Gradation requirements are as follows:

Sieve Designation	Percent Passing
1 inch	100
½ inch	50-85
No. 4	30-60
No. 50	8-28
No. 200	0-10

D. Where dense-graded crushed stone is indicated on the Drawings, this material shall conform to the requirements for Dense-Graded Crushed Stone for Subbase, M2.01.7 of the MHD Standard Specifications, with the following gradation:

E. Crushed stone for safety surface base shall be a homogenous mixture of the following graduation, with exact graduation adjusted to the specific written requirements of the surfacing manufacturer. Stone shall be uniformly mixed in a pug mill or mixing table or other mechanical means prior to placement and sieve analysis.

1. Base course for interlocking recycled plastic pavers shall be equivalent to that used for rubber safety surfacing.

Sieve Designation	Percent Passing
1 inch	90-100
5/8 inch	50-80
1/4 inch	30-50
No. 4	15-35
No. 8	10-30
No. 30	3-5
No. 200	0-3

F. Crushed Stone for all other uses shall conform to the requirements of M2.01.0 Crushed Stone of the MHD Standard Specifications, sized as indicated on the Drawings, with gradation for size as required by the Standard Specifications.

PART 3 - EXECUTION

3.01 LAYOUT

A. Layout site improvements as required in Section 01050 - Field Engineering.

B. The Contractor shall inform the Landscape Architect when the general layout is completed and shall not begin excavation until the various alignments are approved by

the Landscape Architect. Any discrepancies encountered in field conditions shall be reported to the Landscape Architect immediately.

C. The Contractor shall be responsible for maintaining the correct vertical and horizontal alignment of all elements, which responsibility shall not be waived by the Landscape Architect's approval of basic layout and stakeout.

3.02 PROTECTION

A. The Contractor shall assume complete responsibility and liability for the safety and structural integrity of all work and utilities to remain during the performance of all work.

B. The Contractor shall provide safeguards including, but not limited to, warning signs, barricades, temporary construction fences, warning lights and other items required for protection of personnel and the general public during the performance of all work.

C. The Contractor shall provide barricades for substantial construction in accordance with safety regulations of authorities having jurisdiction and or insurance requirements.

D. All features related to protection shall be maintained until that unit of work has been completed to the point that the danger no longer exists as approved by the Landscape Architect.

3.03 GRADING WITHIN THE DRIPLINE OF EXISTING TREES TO REMAIN

A. Refer to Section 02150 Existing Trees to Remain for notification and procedural requirements.

3.04 EXCAVATION

A. Excavation is "Unclassified", and shall include excavation to subgrade elevations indicated on the Drawings, or required to accommodate new construction, regardless of the character of materials and obstructions encountered and shall be understood to include rock and boulders, shale, boulders, earth, hardpan, fill, foundations, pavements, curbs, piping and debris, except as follows:

1. Notify the Landscape Architect prior to proceeding if materials greater than 1 cubic yard in size are encountered.

2. Excavation of rock, stone, ledge, parts of stone, brick or cement concrete slabs greater in size than 1 cubic yard and which cannot be excavated without the use of hydraulic rippers, hammering or breaking, the size of which could not be determined from surface inspection, will be paid for at the Contract Unit Price per cubic yard for Rock Excavation due to unanticipated subsurface conditions, or adjustment may be made to the layout to avoid excavation of same.

B. Unauthorized Excavation: When suitable bearing material is encountered at subgrade elevations shown and excavation is made to greater depth, bring grade back to

elevation required by providing appropriate fill material at no additional cost.

C. When excavation has reached required subgrade elevations, notify the Landscape Architect.

D. If the "assumed" bearing materials are not encountered at the subgrade elevations indicated, additional excavation work may be authorized by the Owner. Do not perform additional excavation unless directed by the Landscape Architect in writing. Removal of unsuitable material and its replacement with proper backfill, if directed in writing by the Landscape Architect, will be paid for as an adjustment of the Contract price due to unanticipated subsurface conditions.

E. During excavation, do not damage roots of trees which are to remain. When excavating or trenching within the branch spread of trees scheduled to remain, hand dig in a manner which will cause minimum damage to root systems. Do not cut tree roots over 2 inches in diameter. Do not leave surface roots exposed. Prune injured roots clean and backfill as soon as possible to the satisfaction of the Landscape Architect and Owner.

F. Slope sides of excavations to comply with local codes and ordinances having jurisdiction. Shore and brace where sloping is not possible because of space restrictions, stability of material excavated, or depth of excavation.

G. Dewatering: Prevent water and subsurface or ground water from flowing into excavations and from flooding project site and surrounding area. Under no circumstances lay pipe or install appurtenances in water. Keep all trenches free from water until they have been backfilled.

H. Materials Storage: Stockpile satisfactory excavated materials where directed until required for backfill or fill. The Landscape Architect shall approve the location of all stockpiles prior to placement. Place, grade and shape stockpiles for proper drainage.

1. Locate and retain soil materials away from edge of excavations. Do not store within drip line of trees to remain.

2. Legally dispose of excess soil material and waste materials off-site.

I. Frost Protection

1. Make no excavations to fill depth indicated when freezing temperature may be expected unless intended improvements can be accomplished immediately after the excavations have been completed. Protect bottom so excavated from frost if progress is delayed. Should protection fail, remove frozen materials and replace with gravel as directed at no cost to the Owner.

2. Keep the site clear and free of accumulations of snow within the limit of the Contract lines as necessary to carry out the work of the Contract.

3. Fill materials containing frost shall not be utilized, nor shall filling be done over

frozen materials.

3.05 BACKFILL AND FILL

A. Backfill excavations as promptly as work permits, but not until completion of the following:

1. Acceptance of construction below finish grade by Landscape Architect.

2. Inspection, testing, approval and recording locations of underground utilities to the satisfaction of the Landscape Architect.

3. Compaction testing of subgrade if required at that location.

3.06 PLACEMENT OF FILL

A. Placement: Place backfill and fill materials in uniform lifts of not more than 12 inches in loose depth for ordinary fill, 8 inches in loose depth for other materials compacted by heavy compaction equipment, not more than 6 inches in loose depth for material compacted by hand operated tampers, except that **compaction of base for safety surface shall be done in two (2) inch lifts, and for interlocking pavers shall be done in one (1) inch lifts.**

1. Coordinate backfilling with the installation of the work of all trades.

2. Before compaction, moisten or aerate each layer as necessary to provide optimum moisture content. Compact each layer to required percentage of maximum dry density or relative dry density for each area classification. Do not place backfill or fill material on surfaces that are muddy, frozen, or contain frost or ice.

3. Place backfill and fill materials evenly adjacent to structures, piping or conduit to required elevations. Take care to prevent wedging action of backfill against structures or displacement of piping or conduit by carrying material uniformly around structure, piping or conduit to approximately the same elevation in each lift.

4. Backfill by hand around pipe and for a depth of one (1) foot above the pipe. Use earth without rock fragments or large stones and tamp firmly in layers not exceeding 6 inches in thickness, taking care not to disturb the pipe. Compact the remainder of the backfill thoroughly with a rammer of suitable weight or with an approved mechanical tamper, or if the soil is granular, by flooding, provided that under pavements, walks and other surfacing, the backfill shall be tamped solidly in layers not exceeding 6 inches in thickness.

5. Compact backfill to match adjacent areas as specified above. Correct settlement of fill by filling to subgrade levels in all areas where settlement occurs.

3.07 COMPACTION

A. Refer to Paragraph 1.07 this Section, for Compaction Testing Requirements for subgrade and crushed stone base of playground area.

B. Compact soil to not less than the following percentages of maximum density of soils in accordance with ASTM D1557, Method C or AASHTO T-180.

1. Subgrade and base courses under all areas (with the exception of planting beds), utility trench backfill, fill at base and around footings, and curb subgrade: Compact each layer of backfill or fill material to 95 percent of maximum dry density.

2. Planting beds: Compact to 85 percent of maximum dry density.

C. Moisture Control: Where subgrade or layer of soil material must be moisture conditioned before compaction, uniformly apply water to surface of subgrade or layer of soil material, to prevent free water from appearing on surface during or subsequent to compaction operations. Remove and replace soil material that is too wet to permit compaction to specified density.

3.08 SUBGRADE PREPARATION AND GRAVEL PLACEMENT FOR PAVEMENTS

A. Clean the rough subgrade of all loose, soft, foreign or other unsuitable material and reshape as required. Add suitable fill material to meet required grade.

B. Compact to required grades and sections for paving. Tamp traces of trenches. Remove spongy or otherwise unsuitable material and replace with approved material. Loosen exceptionally hard spots and re-compact. Take every precaution to obtain a foundation of uniform bearing power. In absence of specific requirement, compact foundation by such means as will provide firm base and insurance against settlement of superimposed work.

C. Roll longitudinally at sides, overlapping each pass by one-half of rear wheel. Fill all depressions or settlements which occur. Continue until all stones are firmly interlocked and surface is true and unyielding. After final rolling, surface is to be free of depressions or irregularities greater than 3/8 inch in ten (10) feet.

D. Construct base course as detailed on the Contract Drawings for all areas of new paved surfaces in this Section. Placement of gravel base course shall conform to the requirements of MHD except as herein modified.

E. Spread gravel from self-spreading vehicles, approved type of power grader or by hand upon prepared sub-grade. Spread evenly in layers so as to avoid separation of aggregates. Layers shall not exceed six (6) inches in depth after compaction. Remove stones larger than four (4) inches. When spread and rolled on the prepared surface, it shall form a stable surface. Compaction shall have a density of not less than 95% of

maximum density determined in accordance with ASSHTO-T-180 Method D. All rolling shall be done with a roller weighing 8 to 10 tons. Compact any portion which is not accessible to a roller by mechanical or hand tamper.

F. Final rolled surface shall be true to the lines and grades indicated on the Contact Drawings or as directed by the Landscape Architect. Fill any depression that may appear during and after rolling with gravel and re-roll until the surface is true and even. Tolerance shall be 3/8 inch maximum above or below the cross-section grades and 3/8 inch maximum under a 10 foot line longitudinally except that:

1. Tolerance for grades of crushed stone base course shall be as required by the safety surface installer/manufacturer.

G. Maintain the surface of any layer in its finished condition until succeeding layer is placed. Properly drain the sub-base at all times.

3.09 GRADING

A. The Contact Drawings indicate, in general, alignment and finish grade elevations. The Landscape Architect, however, may make such adjustments in grades and alignments as are found necessary in order to avoid interference with any special conditions encountered.

B. Uniformly grade areas within limits of grading under this section, including adjacent transition areas. Smooth finished surface within specified tolerances, compact with uniform levels or slopes between points where elevations are indicated, or between such points and existing grades.

1. Final finish grading of large lawn and field areas shall be with laser-guided equipment to achieve

C. Grade areas to drain away from structures and to prevent ponding. Finish surfaces free from irregular surface changes, and as follows:

1. Paved areas: Shape surface of areas under paved surfaces to line, grade and cross section to provide finished grades of pavements within tolerances specified.

D. Compaction: After grading, compact subgrade surfaces to the depth and indicated percentage of maximum or relative density for each area classification.

E. Complete grading operations after utilities have been installed, site improvements included under this Contract have been completed and all rubbish, materials and debris have been properly disposed of.

F. Do all cutting, filling, reshaping, re-grading and re-compacting as necessary to meet the requirements of the Contract Drawings and this Section of the specifications. Maintain sub-grades at the levels specified until turned over to subsequent construction. Bring to

required sub-grade levels any areas where settlement, erosion or other grade changes occur.

3.010 PROTECTION AND REPAIR

A. Protect newly graded areas from traffic and erosion. Keep free of trash and debris.

B. Where completed compacted areas are disturbed by subsequent construction operations or adverse weather, scarify surface, reshape and compact to required density prior to further construction.

C. Whenever streets, lawns, sidewalks or improvements outside the Contract Limit of Work Line have been excavated in fulfilling the work required under this Contract, the Contractor shall furnish and install all material necessary to bring finish surfaces level with the existing conditions in accordance with the governing authority. Notify the proper authorities prior to restoring surfaces outside the Contract Limit of Work.

D. Do all repairs and restoration to pavements, curbs, and other work inside and outside of the project site damaged by the work under this Contract and restore all existing work to a condition at least equal to the condition specified for this Contract for such improvements.

3.10 CLEANUP

A. Keep all work areas free from accumulation of debris during the course of work under this Section.

B. At the completion of the Work of this Section, properly and legally dispose of all excavated materials, all rubbish, debris, waste materials from, and about the site, building, and structures, including tools, scaffolds, apparatus and appliances used in connection with work under this Section and leave the premises in a clean condition.

END OF SECTION

SECTION 02510

BITUMINOUS CONCRETE PAVING & CURBS

PART 1 - GENERAL

1.01 GENERAL PROVISIONS

A. Attention is directed to the General Conditions of the Contract, all Divisions of the Specifications and the Contract Drawings, all of which apply to this section.

B. Examine and coordinate all Contract Drawings and other section of the specifications for requirements which affect work of this section whether or not such work is specifically mentioned in this section. Coordinate work with other trades to assure the steady progress of all work under the Contract. The Contractor shall refer to the Contract Documents for all new work and coordinate how it relates to the paving.

1.02 SCOPE OF WORK

A. Work under this Section shall include all labor, materials, services, equipment, transportation and accessories and the performance of all operations necessary to complete the work of this Section, as indicated on the Contract Drawings and/or as specified herein.

B. The work shall include, but is not limited to, the following:

1. Furnish and install bituminous concrete pavement & curbing
2. Crack-sealing existing tennis court
3. Asphaltic overlay for existing tennis court

1.03 RELATED WORK

A. Section 02100 - Site Preparation and Demolition
B. Section 02200 - Earthwork: Aggregate Base Course
C. Section 02800 - Site Furnishings

1.04 REFERENCE STANDARDS

A. Work shall comply with the minimum standards of the latest editions of the following codes and specifications, subject to modifications and amendments outlined herein.

1. MHDSS: Standard Specifications: Commonwealth of Massachusetts, Department of Public Works, Standard Specifications for Highways and Bridges, latest edition.
2. ASTM: American Society for Testing and Materials.
3. AASHTO: American Association of State Highway and Transportation Officials.
4. Federal, State and/or Municipal Codes
5. Public Safety Codes

6. U.S. Public Health Service
7. National Electric Manufacturers Association
8. American National Standards Institute
9. American Society of Mechanical Engineers
10. Commercial Standards
11. Federal Specifications
12. Occupational Safety and Health Regulations
13. ADA: Americans with Disabilities Act

1.05 QUALIFICATIONS

A. Installer: Company specializing in performing the work of this section with documented experience on at least two similar projects.

1.06 EXAMINATION OF SITE AND DOCUMENTS

A. By submitting a bid the Contractor affirms that he/she has carefully examined the site and all conditions affecting Work under this Section. No claim for additional costs will be allowed because of lack of full knowledge of existing conditions.

B. Plans, surveys, measurements and dimensions under which the work is to be performed are believed to be correct, but the Contractor shall have to examine them for him/herself during the bidding period, as no additional compensation will be made for errors or inaccuracies that may be found therein.

1.07 SUBMITTALS

A. The Contractor shall provide the following submittals for approval in conformance with requirements of SECTION 01300, SUBMITTALS. Do not order materials until Landscape Architect's approval of submittals, certifications or test results have been obtained. Delivered materials shall closely match the approved submittals.

1. Submit the bituminous concrete design mix for each application, indicating aggregate sizes and proportions.

2. Manufacturer's literature for tack coat demonstrating compliance with the specifications.

3. Manufacturer's literature for crack-sealing demonstrating compliance with the Specifications.

1.08 PERMITS AND CODES

A. All work shall be as shown in the Contract Drawings and Specifications and shall comply with applicable codes and regulations at the local, county, state, and federal levels. All labor, materials, equipment and services necessary to make the Work comply with such requirements shall be provided without additional cost to the Owner.

B. The Contractor, under this Section, shall be responsible for providing and filing all Plans, Specifications and other documents, pay all requisite fees and secure all permits, inspections and approvals necessary for legal installation and operation of the systems and or equipment finished under this Section.

1.09 CONDITIONS OF WORK

A. Conduct the work giving consideration to protection of the public, protection of the existing work from weather; control of noise, shocks, and vibration; control of dirt and dust; orderly access and storage of materials; protection of existing buildings; protection of adjacent buildings and property. Coordinate work and cooperate with the Owner and Landscape Architect at all times.

B. Schedule paving in connection with the progress schedule required by the General Conditions.

PART 2 - PRODUCTS

2.01 BITUMINOUS CONCRETE PAVEMENT

A. Bituminous concrete shall be Class I, Type I-1, furnished and laid in accordance with Section 420 and 490 of the MHD Standard Specifications except as modified herein.

B. Subbase for bituminous concrete shall be Dense-graded Crushed Stone for Subbase as specified in Section 02200 - Earthwork.

1. Subgrade and subbase shall be installed and compacted as required in Section 02200 - Earthwork.

C. Aggregate sizes and gradation for bituminous mixes shall be as follows:

1. Bituminous concrete base course shall conform to MHD Standard Specifications, Section M3, Table A Job Mix Formula for “Base Course”.

2. Binder course shall conform to MHD Standard Specifications, Section M3, Table A Job Mix Formula for “Binder Course.”

3. Mix for bituminous curbs shall conform to MHD Standard Specifications, Section M3, Table A, Job Mix Formula for “Dense Mix” with any aggregate greater than ½”.

4. Wearing course for bituminous concrete walkways,basketball, tennis and skate and scoot paving shall be equivalent to MHD Standard Specifications, Section M3, Table A Job Mix Formula for "Surface Treatment” with a maximum aggregate size of 3/8".

2.02 TACK COAT

A. Tack Coat shall be bitumen Grade, AC-10, or AC-20 asphalt cement conforming to Section M3 of the Standard Specifications.

2.03 CRACK SEALING SYSTEM FOR TENNIS COURT

A. Crack sealing system shall be Armor Crack Repair system or approved equal utilizing a knitted flexible expandable fabric providing a final thickness of no more than .035".

B. The system shall allow thermal expansion and contraction of the crack without damage to the crack repair material.

PART 3 - EXECUTION

3.01 PREPARATION

A. Make any corrections necessary to base material furnished and placed under SECTION 02200, EARTHWORK, to bring base course materials to sections and elevations shown on the Contract Drawings.

B. The contact surfaces of curbs, walls, manholes, catch basins or other appurtenant structures in pavement shall be painted thoroughly with a thin uniform coating of tack coat just before any bituminous mixture is placed against them.

3.02 CRACK-SEALING

A. Preparation

1. Follow manufacturer's instructions for preparation.

2. Clean the existing color coated surface to provide a clean and contaminate free surface without surface dirt, mildew, pollen, dust, leaves or loose paint.

3. If power-washing is required in order to remove contaminants, fill cracks first to prevent water from going into the cracks during pressure washing.

4. Remove any previous crack repair materials that are loose and not bonded to the court including rubberized crack filling material.

B. Application

1. Strictly follow manufacturer's instructions for installation.

a. Do not install crack system if the temperature is below 70 degrees fahrenheit or when the temperature will fall below 60 degrees at night.
b. Do not install on overcast days.
c. Do not install after rain or when rain is predicted or likely. Wait until cracks are dry.

d. Do not install on cracks that emit moisture.
e. Do not install over old or peeling Asphalt emulsion.
f. Do not use a rubber squeegee or broom to apply the glue or fabric.

3.03 PATCHES AND NEW PAVING ABUTTING EXISTING

A. Where the line of demarcation between new and existing paving occurs, the existing paving shall be saw-cut to provide a clean sharp joint. The pavement shall be sawn by an approved machine to a depth which will permit the cutting of the pavement without damage to the pavement left in place.

1. Protect sawn edges of paving from damage until new paving is placed against it. Existing pavement which is damaged, disturbed or settled, shall be cut back by the same method and replaced as directed by the Landscape Architect without additional cost to the Owner.

B. Where new bituminous paving meets existing paving the finish grades in the new work shall be adjusted if necessary, to blend smoothly with the existing pavement. Seal joint at saw-cut line with an approved bituminous emulsion. Notify the Landscape Architect of discrepancies before preceding with the work.

3.04 TENNIS COURT OVERLAY

A. Court pavement shall be clean and dry prior to placing overlay.
B. Seal all cracks.
C. Provide tack coat.
D. Provide overlay of Surface Treatment Design Mix, 3/8” maximum aggregate.

3.05 PLACEMENT

A. The mixtures shall be placed and compacted only at such times which permit the proper inspection and checking by the Landscape Architect.

B. The mixtures shall be placed only upon approved surfaces that are clean and dry, and when weather conditions are suitable. No bituminous material shall be applied when the temperature is below 32 F.

C. The temperature of bituminous concrete mixture when delivered to the site shall conform to the following, with a tolerance of plus or minus 20 F.

Air Temperature	Project Delivery Temperatures
35F	300F
40F	290F
6SF	280F
90 F, or over	270F

D. Place courses of bituminous concrete in conformance to application and depth requirements shown on the Contract Drawings and specified herein. Depths referenced shall be compacted thicknesses. Bituminous concrete for binder course and wearing or top course shall be furnished and laid in accordance with Section 460 of the Standard Specifications, and as directed herein and by the details.

3.06 SPREADING

A. The equipment for spreading and finishing shall be mechanical, self-powered pavers, capable of spreading and finishing the mixture true to lines, grade, width and crown by means of fully automated controls for both longitudinal and transverse slope.

B. Mixtures shall be deposited in a mechanical spreader and immediately spread thereby, and then struck off in a uniform layer to the full width required and of such depth that each course, when compacted, shall have the required thickness and shall conform to the grade and cross section contour specified.

C. Hand Spreading: Spreading by hand methods will be permitted only for particular locations in the work which because of irregularity, inaccessibility or other unavoidable obstacles do not allow mechanical spreading and finishing.

D. Compaction:

1. After the paving mixture has been properly spread, compaction shall be obtained by the use of power rollers of approved design and weight per inch of roller. The rollers shall be steel wheeled supplemented with pneumatic-tired rollers where required.

2. Along curbs, structures and places not accessible with a roller, the mixture shall be thoroughly compacted with mechanical tamping devices. The surface of the mixture after compaction shall be smooth and true to the established line and grade.

3. The densities of the completed pavement shall be not less than 95% of the density obtained from laboratory compaction of a mixture composed of the same materials in like proportions.

E. All areas of finished paving on which water stands or which are found excessively uneven shall be promptly brought to the correct grade and line.

F. When tested with a ten (10) foot straightedge there shall be no deviation from true surface planes represented by the grade elevations shown on the Contract Drawings in excess of one-quarter (¼) inch.

G. Do any repair or patching to pavements outside the project site damaged by work of the contract. All patching work required shall be in accordance with requirements for new construction.

H. No vehicular traffic of any kind shall be allowed to pass over the newly finished surface until it has had time to set. Twenty-four (24) hours will be considered sufficient time for the pavement to set in most cases, but this period may be extended by the Landscape Architect/Engineer as required by weather or other reasons.

I. Install frames and rims after installation of binder course for bituminous concrete pavement. Install wearing course after the installation of the frames and rims. Frames and rims shall have the same grade and slope as adjacent construction.

3.07 BITUMINOUS CONCRETE CURB INSTALLATION

A. Place bituminous curb in accordance with Section M3.11.00 and Section 0470 unless specified otherwise.

B. Clean the area under the curb prior to placing. Apply tack or prime coat.

C. Place the curb with a heavy duty automatic curb-laying machine capable of molding a dense, stable curb, true to line, grade and section.

D. Tack coat shall be placed between successive courses if more than forth-eight (48) hours have elapsed after placing the preceding course. The tack coat shall be applied at a rate of 0.10 to 0.25 gallons per square yard.

E. The bituminous concrete curb shall be placed in such a manner to produce a finished surface free from depressions, waves or other defects that would prevent proper drainage. The finished surface shall be uniform in texture and appearance.

F. After final placement, do not permit vehicular traffic near the curb until it has cooled and hardened.

G. Test in-place bituminous concrete curb for compliance with requirements for surface smoothness. Test using a 10 foot straight-edge applied with, and parallel to, the centerline of the curb. Tolerance for curb: ¼”.

3.08 QUALITY ASSURANCE

A. The Landscape Architect may require the Contractor to remove and replace at the Contractor’s expense any defective mix not conforming to the specified job mix formula.

B. If, at any time before the final acceptance of the work, any soft, imperfect places or spots shall develop in the surface, all such places shall be removed and replaced with new materials and then compacted until the edges at which the new work connects with the old become invisible, at no additional expense to the Owner.

3.09 CLEAN-UP

A. Keep all work areas free from accumulation of debris during the course of work under this Section.

B. At the completion of the paving, all rubbish, debris, waste materials from, and about the site, building, and structures, including tools, scaffolds, apparatus and appliances used in connection with work under this Section shall be legally disposed of and the premises shall be left in a clean condition.

END OF SECTION

SECTION 02515

PRECAST CONCRETE PAVERS

PART 1 - GENERAL

1.01 WORK INCLUDED

A. All of the Contract Documents, including the Contract Form, General Provisions, General Conditions, Supplemental Conditions, and all Attachments to the General Provisions, and Division 1 - General Requirements, apply to the work of this Section.

B. Provide all equipment and materials and do all work necessary to furnish and install the precast concrete pavers, as indicated on the Drawings and as specified.

1.02 RELATED WORK

A. Examine Contract Documents for requirements that affect work of this Section. Other Specification Sections that directly relate to work of this Section include, but are not limbed to:

1. Section 02200 - Earthwork
2. Section 02510 - Bituminous Concrete Paving & Curbing
3. Section 03300 - Cast-in-place Concrete.

1.03 REFERENCES

A. Comply with applicable requirements of the following standards. Where these standards conflict with other specified requirements, the most restrictive requirement shall govern.

1. American Association of State Highway and Transportation Officials (AASHTO):

Specifications	Standard Specifications for Highway Bridges
M 81	Cut-back Asphalt (Rapid-Curing Type)

2. American Society tor Testing and Materials (ASTM):

C 67	Sampling and Testing Concrete unit and Structural Clay Tile
C 144	Aggregate for Masonry Mortar
C 902	Pedestrian and Light Traffic Paving Concrete unit
D36	Softening Point of Bitumen (Ring-and-Ball Apparatus)
D 113	Ductility of Bituminous Materials
D 3381	Viscosity-Graded Asphalt Cement for Use in Pavement Construction

1.04 SUBMITTALS

A. Samples:

1. Concrete Unit Pavers: Furnish five individual Concrete Unit Pavers of each type as samples, showing extreme variations in color and texture.

2. Preformed Joint Filler: Submit sample showing color and texture.

B. Manufacturers Product Data: Manufacturers product data shall be submitted for the following items:

1. Precast Concrete paver.
2. Neoprene-modified asphalt adhesive.
3. Expansion joint filler.

C. Test Report: Submit reports from tests conforming to ASTM C 67 methods indicating:

1. Compressive strength, psi.
2. Absorption, 5 hr. submersion in cold water.
3. Absorption, 24 hr. submersion in cold water.
4. Maximum saturation coefficient.
5. Initial rate of absorption (suction).
6. Abrasion index.
7. Freeze-thaw.
8. Efflorescence.

D. Qualification data for firms and persons specified in "Quality Assurance" Article to demonstrate their capabilities and experience. Include list of completed projects with project names, addresses, names of Architects and Owners, plus other information specified.

1.05 QUALITY ASSURANCE

A. Installer Qualifications: Engage an experienced Installer who has successfully completed precast concrete paver installations similar in material, design, and extent to that indicated for this Project.

B. Single-Source Responsibility: Obtain each color, type, and variety of precast concrete paver, joint material, and setting material from a single source with resources to provide products and materials of consistent quality in appearance and physical properties without delaying progress of the Work.

1.06 SAMPLE PANEL

A. Construct a sample panel of precast concrete paving on each specified base and setting bed before start of any precast concrete paving. Sample panel shall include one fully constructed expansion joint to full depth and width of sample panel. Expansion joint shall be fully constructed including joint filler, backer rod, and joint sealant.

1. One-half of Sample panel shall illustrate pavers when laid with bevel up, and pavers laid with bevel down, for selection by the Owner.

2. Sample panel shall exhibit proposed precast concrete unit paver size, color

range, texture, bond, jointing, paving pattern, and workmanship.

3. Expansion joint shall exhibit proposed joint filler size and width, backer rod, and color and texture of approved joint sealant.

4. Joints between concrete units shall be sand swept as specified.

5. Size of panel for shall be 7 feet long x 6 feet-4 inches wide, minimum.

B. Sample panel shall be Inspected by the Architect. If the sample Is not acceptable, construct additional panels at no cost to the Owner until an acceptable panel is constructed. Accepted panel shall become the standard for the entire job, and shall remain undisturbed until completion of all work.

1. When directed, demolish and remove sample panel from the Project site.

1.07 DELIVERY. STORAGE, AND HANDLING

A. Concrete unit pavers shall be carefully packed by the supplier for shipment.

B. Concrete unit pavers shall be stored off the ground and protected against staining and other damage.

C. Pavers damaged in any manner will be rejected and replaced with new materials at no additional cost to the Owner.

1.08 PROJECT CONDITIONS

A. Cold-Weather Protection: Do not use frozen materials or materials mixed or coated with ice or frost. Do not build on frozen subgrade or setting beds. Remove and replace concrete unit paver work damaged by frost or freezing.

B. Weather Limitations for Bituminous Setting Bed: Comply with the following requirements:

1. Apply asphalt primer coat when ambient temperature is above 50 deg F (10 deg C) and when temperature has not been below 35 deg F (1 deg C) for 12 hours immediately prior to application. Do not apply when base is wet or contains an excess of moisture.

2. Install bituminous setting bed only when atmospheric temperature is above 40 deg F (4 deg C) and when base is dry.

C. Weather Limitations: Protect unit paver work against freezing when atmospheric temperature is 40 deg F (4 deg C) and falling. Heat materials and provide temporary protection of completed portions of unit paver work. Comply with International Masonry All-Weather Council's "Guide Specification for Cold-Weather Masonry Construction," Section 04200, Article 3.

D. Hot-Weather Requirements: Protect unit paver work when temperature and humidity conditions produce excessive evaporation of setting beds and grout. Provide artificial

shade and wind breaks and use cooled materials as required. Do not apply mortar to substrates with temperatures of 100 deg F (38 deg C) and above.

1.09 PROTECTION OF FINISHED SURFACES

A. Finished surfaces adjacent to the concrete unit paving work shall be adequately protected from soiling, staining, and other damage during construction.

PART 2 - PRODUCTS

2.01 PRECAST CONCRETE UNIT PAVERS

A. Precast Concrete Unit Paver "Colonial Pavers" manufactured by Ideal Block Company, Inc. 232 Lexington Street, Waltham, MA p 781-894-3200 or equal conforming to the following:

1. Pavers shall be solid, interlocking paving units, made from normal-weight aggregates in sizes and shapes indicated. Pavers shall conform to ASTM C936 summarized as follows:

a. Average compressive strength shall be 8,000 psi with no individual unit under 7,200 psi.

b. Average water absorption (ASTM C 140) shall be 5% with no unit greater than 7%.

2. Pavers shall be dimensioned 4" x 8" x 2-3/8" thick.

B. Color of pavers shall be chosen by the Owner from manufacturer's standard color choices for Colonial Pavers, or equal.

2.02 BITUMINOUS SETTING BED

A. Asphalt cement to be used in the bituminous setting bed shall conform to ASTM D 3381. Viscosity grade shall be AC - 10 or AC- 20.

B. Fine aggregate to be used in the bituminous setting bed shall be clean, hard sand with durable particles and free from adherent coating, lumps of clay, alkali salts, and organic matter. Aggregate shall be uniformly graded from "coarse" to "fine" with 100% by weight passing the No. 4 sieve and shall meet the gradation requirements when tested in accordance with ASTM C 136.

C. Fine aggregate shall be dried and shall be combined with hot asphalt cement, and the mix shall be heated to approximately 300^0F at an asphalt plant. The approximate proportion of materials shall be 7% cement asphalt and 93% fine aggregate. Each ton of material shall be apportioned by weight in the approximate ratio of 145 lb. asphalt to 1,855 lb. sand. The Contractor shall determine the exact proportions to produce the best possible mixture for construction of the bituminous setting bed to meet specified requirements.

2.03 NEOPRENE-MODIFIED ASPHALT ADHESIVE

A. Neoprene modified asphalt adhesive shall meet the following requirements:

1. Mastic (asphalt adhesive):

a. Solids (base) content by volume = 75±1%.
b. Weight = 8 to 8.5 lb/gal.
c. Solvent vehicle = Varsol (over 100^0F. flash).

2. Base (2% neoprene, 10% fibers, 88% asphalt):
a. Melting point (ASTM D 36) = 200^0F., minimum.
b. Penetration at 77^0F. 100 gram load 5 second (0.1 mm) = 23 to 27.
c. Ductility (ASTM D 113 at 25^0C, 5 cm/minute) = 125 cm, minimum.

2.04 CUT-BACK ASPHALT

A. Primer for concrete base slab beneath concrete unit pavers subject to vehicular traffic shall be with rapid curing cut-back asphalt conforming to AASHTO M 81.

2.05 EDGE RESTRAINTS

A. Edge restraints shall be as shown on the Drawings and of such dimension as the be below finished surface of pavement after installation. Edge restraints shall be metal. Heat resistant plastic edge restraints may be used if recommended by the manufacturer for use with bituminous setting beds.

2.06 SAND JOINT FILLER & BINDER

A. Joint filler between paver joints shall be a clean, washed, uniformly well graded masonry sand conforming to ASTM C 144, except that the fineness modulus shall be 2.25± 0.10. Sand shall be from a single source.

B. Binder for joint sand shall be “SandLock” by Pave Tech (1-800-728-3832) or approved equal.

2.07 GEOTEXTILE AT WEEPHOLES

A. Filter fabric at weepholes shall be a permeable light-weight non-woven fabric recommended by the manufacturer for separation of soil aggregates.

2.08 WATER

A. Water shall be potable and shall be free of injurious contaminants.

2.09 CONCRETE BASE COURSE

A. Provide concrete base course with as specified in Section 03300 - Cast-in-Place Concrete .

1. Provide expansion joints at 30' o.c. maximum, with preformed filler and sealant

as specified in Section 03300.

2. Provide weep holes in concrete base, 20' o.c. and at low points, covered with filter fabric at interface with bituminous base.

PART 3 - EXECUTION

3.01 INSTALLATION - GENERAL

A. Concrete unit pavers shall be set true to the required lines and grades in the pattern detailed on the Drawings. Concrete unit pavers shall be neatly cut and fitted at all perimeters and closures to fit neatly and closely with joint uniform in specified thickness. Neatly cut pavers with guillotine or saw. Joint width shall not exceed 1/16".

B. Tolerances: Do not exceed 1/16" inch unit-to-unit offset from flush (lippage).

C. There is no tolerance for required ADA/MAAB slopes on paved walkways or plaza areas. Cross-slopes shall not exceed 2% and longitudinal slopes shall be less than 5%, measured with a 2' long smart level.

3.02 ACCEPTABILITY OF CONCRETE BASE

A. Contractor shall examine the concrete base slab to determine Its adequacy to receive Concrete unit paving and setting bed. Concrete shall have fully cured with sealed expansion joints. Evidence of inadequate base shall be brought to the immediate attention of the Architect.

B. Vacuum clean concrete substrates to remove dirt, dust, debris, and loose particles.

C. Start of work of this Section shall constitute acceptance of concrete base slab.

3.03 CUT-BACK ASPHALT PRIME COAT

A. Cut-back asphalt shall be applied to concrete base slab at a rate sufficient to act as an adhesive between the concrete slab and the bituminous setting bed.

3.04 BITUMINOUS SETTING BED

A. Bituminous setting bed shall be installed over the fully cured concrete base. Control bars 3/4 in. deep shall be placed directly over the base. If grades must be adjusted, wood chocks under depth control bars shall be set to proper grade. Set two bars parallel to each other to serve as guides for the striking board. The depth control bars must be set carefully to bring the pavers, when laid, to proper grade.

B. While still hot (not less than 250^0F.) some of the bituminous bed material shall be placed between the parallel depth control bars. This bed shall be pulled with the striking board over the control bars several times. After each passage, low porous spots shall be showered with fresh bituminous material to produce a smooth, firm, and even setting bed. As soon as this initial panel is completed, advance the first bar to the next position in readiness for striking the next panel. After the depth control bars and wood chocks have been removed, carefully fill any depressions that remain.

C. The setting bed shall be rolled with a power roller to a nominal depth of 3/4 inch, while still hot. The thickness shall be adjusted so that when the Concrete units are placed and rolled, the top surface of the pavers will be at the required finished grade.

D. A coating of neoprene-modified asphalt adhesive shall be applied by mopping, squeegeeing, or troweling over the top surface of the bituminous setting bed so as to provide a bond under the pavers.

1. If adhesive is trowel-applied, trowel shall be serrated type with serrations not to exceed 1/16 inch.

3.05 SETTING PRECAST CONCRETE UNIT PAVERS

A. Concrete unit pavers shall be on a bituminous setting bed over a prepared concrete base. All setting shall be done by competent masons under adequate supervision.

B. Concrete unit pavers with chips, cracks, stains, or other defects which might be visible in the finished work shall not be used.

C. After the modified asphalt adhesive is applied, carefully place the pavers by hand in straight courses with hand tight joints and uniform top surface.

D. Concrete unit pavers shall be set true to the required lines and grades in the pattern detailed on the Drawings. Concrete unit pavers shall be neatly cut and fitted at all perimeters and closures to fit neatly and closely, with joints uniform in thickness. Pavers shall be cut with a water-cooled, cut-off wheel masonry saw using a diamond blade. Protect newly laid unit pavers with panels of plywood on which workers stand. Advance protective panels as work progresses but maintain protection in areas subject to continued movement of materials and equipment to avoid creating depressions or disrupting alignment of unit pavers. If additional leveling of paving is required, and before treating joints, roll with power roller after sufficient heat has built up in the surface from several days of hot weather. Check and maintain alignment as often as necessary.

E. Tolerances: Do not exceed 1/32 inch unit-to-unit offset from flush (lippage) and a tolerance of 1/8 inch in 10 feet from level or slope as indicated for finished surface of paving.

F. Expansion and Control Joints: Provide for sealant-filled joints at locations and of widths indicated. Sealant materials and installation are specified in Section 02764 - Joint Sealants.

3.06 JOINT TREATMENT

A. Joints between pavers shall be hand tight and shall be uniform in thickness. Joint thickness shall not exceed 1/16 inch.

B. Joint filler shall be swept dry into the joints between pavers until the joints are completely filled. Surface shall be swept clean. Swept surface shall than be thoroughly dampened with a low-volume fine spray of water.

3.07 CLEANING AND PROTECTION OF CONCRETE UNIT SURFACES

A. Remove and replace unit pavers that are loose, chipped, broken, stained, or otherwise damaged or if units do not match adjoining units as intended. Provide new units to match adjoining units and install in same manner as original units, with same joint treatment to eliminate evidence of replacement.

B. After completion of concrete unit paving, surfaces shall be carefully cleaned, removing all dirt, excess mortar, filler, and stains.

C. Provide final protection and maintain conditions in a manner acceptable to Installer, which ensures unit paver work being without damage or deterioration at time of Substantial Completion.

END OF SECTION

SECTION 02540

SAFETY SURFACING

PART 1 - GENERAL

1.01 GENERAL PROVISIONS

A. Attention is directed to the General Conditions of the Contract, all Divisions of the Specifications and the Contract Drawings, all of which apply to this section.

1.02 SCOPE OF WORK

A. Furnish and install safety surfacing of type and in locations shown on the Drawings and specified herein.

1.03 RELATED WORK

A. Section 02200 - Earthwork: Compacted crushed stone base
B. Section 02850 - Athletic Equipment
C. Section 02860 - Play Equipment
D. Section 03300 - Cast-in-Place Concrete

1.04 WARRANTY

A. The manufacturer shall provide to the Owner the manufacturer's standard warranty which shall be at a minimum for a 5 year period from the completion of the installation. The warranty shall guarantee the impact attenuation, color stability, and physical stability against cracking or separation of layers.

1.05 DEFINITIONS

A. Critical Height: Standard measure of shock attenuation. According to CPSC No. 325, this means "the fall height below which a life-threatening head injury would not be expected to occur".

B. EPDM - Ethylene propylene diene monomer

C. Fall Height: According to ASTM 1487, this means "the vertical distance between a designated play surface and the protective surfacing beneath it." The fall height of the playground equipment should not exceed the Critical Height of the protective surfacing beneath it.

D. SBR - Styrene butadiene rubber

E. TPV - Thermoplastic vulcanizate

F. Use Zone: According to ASTM F1487, this means "the area beneath and immediately

adjacent to a play structure that is designated for unrestricted circulation around the equipment and on whose surface it is predicted that a user would land when falling from or exiting the equipment.

1.06 SUBMITTALS

A. Poured-in-Place Surfacing:

1. Submit manufacturer's certificate verifying that EPDM/TPV granules are manufactured from pre-consumer virgin rubber.

2. Submit manufacturers literature for top course (aliphatic primer) and base course primers demonstrating compliance with the specifications.

3. Submit manufacturer's literature demonstrating specification compliance for cushion course.

4. Submit manufacturer's literature documenting specification compliance with the following requirements:

   (a) water permeability
   (b) dry & wet coefficient of friction
   (c) tensile strength
   (d) tear resistance
   (e) flammability
   (f) UV stabilization method.

5. Submit depth of safety surfacing for different fall heights.

6. Provide a list of five (5) installations of rubber safety surfacing completed by proposed installer in the last five years using the same system, including project name, phone number, address, and contact.

7. Installer Certificates: Signed by manufacturer certifying that installers comply with requirements.

8. Manufacturer's Certificates: Signed by the manufacturer certifying that they comply with the requirements.

9. Product Test Reports: From IPEMA indicating that playground surface system complies with the requirements, based on comprehensive testing of the product as follows: ASTM F 1292 latest version, ASTM F 1951 latest version and CPS guidelines for impact attenuation for the fall height required by the equipment and the depth of safety surfacing. Product testing shall have been done within the last five (5) years.

10. Submit manufacturer's specifications for stone base course including required sieve gradation of stone, subgrade slope, and permissible tolerances in grade

variation.

12. Maintenance Data: Submit manufacturer's printed installation and maintenance instructions.

13. Submit Performance Warranty, signed and dated for poured-in-place surfacing.

B. Samples:

1. Provide five (5) 4-inch diameter round samples of specific custom color blends requested by the Landscape Architect for final color selection by the Owner.

1.07 REFERENCES

A. ASTM F 1292 - Standard Specification for Impact Attenuation of Surface Systems Under and Around Playground Equipment.

B. ASTM F 1951 - Standard Specification for Determination of Accessibility of Surface Systems Under and around Playground Equipment.

C. U.S. Consumer Product Safety Commission (CPSC), Public Playground Handbook for Safety.

D. ASTM D2434- Standard Test Method for Permeability of Granular Soils (Constant Head)

E. Americans with Disabilities Act Guidelines (ADAAG) for Building and Facilities, 36 CFR Part 1191

F. MAAB CMR 521 Regulations

1.08 FALL HEIGHTS

A. Refer to Drawings for fall heights of play equipment.

1.09 QUALITY ASSURANCE

A. Surfacing manufacturer shall have marketed the surfacing system specified in the United States for at least five (5) years.

B. Surfacing manufacturer shall have IPEMA Certification specific to poured in place safety surfacing of the system specified.

C. Installer shall be trained and certified by the manufacturer as a qualified installer of their product. In addition, the installer shall have experience in installing at least three (3) installations of similar size and complexity.

D. Rubber materials shall be supplied by an ISO9001 certified manufacturer.

1.10 REGULATORY REQUIREMENTS

A. Installation of surfacing shall conform to applicable requirements of ADAAG - Americans with Disabilities Act Accessibility Guidelines, U.S. Architectural and Transportation Barriers Compliance Board, Washington, D.C. - latest edition, and regulations of the Commonwealth of Massachusetts Architectural Access Board (MAAB), 521 CMR.

1.11 JOB CONDITIONS

A. At the time of application ambient air temperature shall be between 40 degrees and 90 degrees F and remain so for at least 72 hours after completion, unless otherwise specifically allowed by the manufacturer of the safety surface. There shall be no fluctuation in temperature greater than 15 degrees F during the installation period, or 25 degrees F during the curing time. Synthetic safety surfacing shall be installed on a dry subsurface, with no prospect of rain within the initial drying period.

1.12 COORDINATION

A. Coordinate construction of playground surface systems with installation of playground equipment and perimeter curbing to verify accurate use zones and fall heights.

B. The Contractor shall coordinate with the installer and manufacturer of the safety surfacing to ensure that all manufacturer's/installer's requirements for the base course are met including subgrade slope, drainage, maximum variation in grade of surface, and gradation of stone base.

1.13 DELIVERY STORAGE AND HANDLING

A. All packaged materials shall be delivered to the site in original unopened containers clearly indicating manufacturer name, brand name, and other identifying information.

B. All materials shall be protected from weather and other damage prior to application, during application and while curing. Materials shall be stored at a minimum temperature of 40 degrees and a maximum temperature of 90 degrees.

C. Protect UV-light-sensitive materials from exposure to sunlight.

PART 2 - MATERIALS

2.01 MANUFACTURERS

A. Subject to compliance with the Specifications, manufacturers offering the products that may be incorporated into the work include, but are not limited to, the following:

1. Surface America, Playbound PIP, local representative M.E. O'Brien & Sons, Medfield, MA (508-359-4200)

2. Duraturf PIP, local representative Sport Surface Specialties, East Aurora, NY (716-652-2039)

3. No-Fault Safety Surfacing, No Fault Sport Group, LLC, (225-215-7760).

4. Or Equal. To be considered equal, a manufacturer must meet all requirements of the Specifications including but not limited to the requirements for current IPEMA certification for the poured in place surfacing to the used and the use of virgin rubber for EPDM/TPV granules.

2.02 POURED-IN-PLACE PLAYGROUND SURFACING

A. Playground surfacing shall be a system formulated for site-mixing and application from rubber particles in a polyurethane binder, forming a water permeable, UV-light stable, impact-attenuating, seamless playground surface system with layered construction consisting of a lower-density formulation of SBR particles and polyurethane forming a cushion-base layer bonded to higher-density formulation of EPDM or TPV rubber particles and aliphatic polyurethane, forming a top-layer wearing surface. Surfacing system shall be porous.

B. Surface Characteristics

1. Impact Attenuation: HIC of no more than 1000; peak deceleration of no more than 200 g's.

2. Dry static coefficient of friction (ASTM D2047) - Min. 0 .9

3. Wet static coefficient of friction (ASTM D2047) - Min. 0.7

4. Accessibility of Surface System: ASTM F1951: Pass

5. Permeability: .04 gal/square yard/sec

6. Tensile strength, measured by ASTM D412 shall be not less that 25 psi.

7. Tear resistance (ASTM D624) - 140%.

8. Flammability: shall pass ASTM D2859.

C. Top Course:

1. The top wearing course shall be a minimum ½" thickness monolithic layer composed of EPDM or TPV particles bound with polyurethane binder. The urethane content shall be 18% minimum by weight of the entire mixture.

(a) Polyurethane Binder for top course

(1) Binder for top course shall be an **aliphatic** weather resistant,

UV-stabilized, flexible, non-hardening, 100 percent solids polyurethane complying with requirements of authorities having jurisdiction for nontoxic and low VOC content. The binder shall be HDI (1,6-hexamethylene diisocyanate) based. Aromatic isocycantes such as toluene diphenel isocyanate (TDI) or methylene diphenyl diisocyanate (MDI) are not acceptable. No filler materials shall be used in urethane such as plasticizers and the catalyzing agent shall contain no heavy metals.

(b) **TPV and EPDM particles shall be manufactured from pre-consumer virgin rubber**. Particles from post-consumer rubber are not acceptable.

(1) Approved sources for EPDM or TPV particles:

a. Rosehill Polymers, England as distributed by American Recycling Center, Owoosi, Michigan.

b. Melos-GMBH

c. Granules manufactured in the US from virgin pre-consumer rubber by an ISO9001 certified company.

(2) TPV and EPDM particles shall remain consistent in gradation and size as follows:

a. TPV particles shall be sized 1 mm - 4 mm.

b. EPDM particles shall be sized 1 mm - 3 mm.

c. Strand, shaved, chipped or shredded rubber is not acceptable in the wearing course layer.

(3) Color of particles shall be an integral dye. Color from coating or colored primer is not acceptable.

a. Pricing shall be based on a top course of 50% Brown, 50% Light Grey with final selection by the Owner from colors of comparable price.

D. Base Cushion Layer: The base impact layer shall be a monolithic layer composed of shredded 100% styrene butadiene rubber (SBR), or manufacturer's standard formulation of pre-consumer recycled 5/8" chunk rubber, bound together with a polyurethane binder.

1. The dust content shall be no greater than 4%.

2. Binder shall be a single component polyurethane designed for use with rubber granule material for outdoor installations.

3. Urethane in the base layer shall be a minimum of 14% by weight of the entire mix.

2.02 BASE COURSE FOR POURED-IN-PLACE SURFACING

A. Base course shall be crushed stone as specified in Section 02200 - Earthwork, with gradation adjusted to manufacturer's recommendations. Bid shall include any additional costs necessary to adjust specified crushed stone base to the gradation and requirements of the specific manufacturer of the surfacing.

PART 3 - INSTALLATION

3.01 BASE PREPARATION

A. Subgrade under base course shall be installed and compacted as specified in Section 02200-Earthwork. Subgrade shall be tested as specified in Section 02200 - Earthwork.

1. Slope subgrade of base course parallel to finished grade of play surface.

B. Provide subsurface drain at downslope ends of subgrade.

C. Aggregate base course shall be installed and compacted in Section 02200 - Earthwork, fully compacted in 2" lifts to 95% compaction. Contractor shall perform compaction testing specified in Section 02200 - Earthwork on first lift and last lift.

D. Variation in grade of aggregate surface shall be as required by the manufacturer/installer.

3.02 INSPECTION OF BASE

A. Verify that base is installed to correct slopes, grades and tolerances prior to installation of poured in place surfacing. Prior to application of the poured in place system, the applicator shall evaluate the substrate's structural performance, and notify all contractors and the landscape architect of any deficiencies. Work shall not proceed until unsatisfactory conditions are corrected.

B. Prior to installation, verify that cast-in-place perimeter curbing has been set to correct lines and grades to ensure adequate safety zones and grades not exceeding 2%.

C. Refer to Paragraph 1.11 Job Conditions for environmental requirements. Temperature of all components shall be checked to ensure that their temperature is equal to or greater than 40 degrees F. Components that are below the required application temperature shall not be used until the temperature is elevated to the specified application temperature.

1. Install safety surfacing to the dimensions and limits shown on the Drawings.

2. Surfacing shall be installed in strict accordance with the submitted manufacturer's printed installation instructions and as detailed on the Drawings.

3.03 PROTECTION

A. Provide protection of surface during curing process.

END OF SECTION

SECTION 02590

COLOR COATING

PART 1 - GENERAL

1.01 GENERAL PROVISIONS

A. Attention is directed to the General Conditions of the Contract, all Divisions of the Specifications and the Contract Drawings, all of which apply to this section.

B. Examine and coordinate all Contract Drawings and other section of the specifications for requirements which affect work of this section whether or not such work is specifically mentioned in this section. Coordinate work with other trades to assure the steady progress of all work under the Contract. The Contractor shall refer to the Contract Documents for all new work and coordinate how it relates to this Section.

1.02 SCOPE OF WORK

A. Work under this Section shall include all labor, materials, services, equipment, transportation and accessories and the performance of all operations necessary to complete the work of this Section, as indicated on the Contract Drawings and/or as specified herein.

B. The work shall include, but is not limited to, the following:

1. Color coating and line marking of basketball and tennis courts.

1.03 RELATED SECTIONS

A. Refer to Section 02595 for Traffic Pavement Marking.

1.04 SUBMITTALS

A. Submit the following in accordance with the requirements of the General Conditions:

1. Paint: Submit manufacturer's product data demonstrating specification compliance for line paint, and fortified and non-fortified paint for area painting.

(a) Submit color samples of manufacturer's standard colors for final selection by the Owner.

2. Submit manufacturer's directions for application, including permissible temperature for application and storage, drying time, coating thickness and application rates, and period of curing time prior to application to new bituminous concrete.

3. Submit installer name and evidence of qualifications.

1.05 REFERENCES

A. Massachusetts Highway Department Standard Specifications for Highways and Bridges, 1988 edition.

1.06 QUALIFICATIONS

A. Installer shall be from a company with at least 5 years experience in commercial painting.

1.07 REGULATORY REQUIREMENTS

A. Materials and handling of paint shall conform to all environmental and OSHA regulations.

1.08 DELIVERY STORAGE AND HANDLING

A. All packaged materials shall be delivered to the site in original unopened containers clearly indicating manufacturer name, brand name, and other identifying information. Paint shall be stored within the temperature ranges indicated by the manufacturer.

1.09 ENVIRONMENTAL REQUIREMENTS

A. Paint shall be applied within the temperature ranges recommended by the paint manufacturer.

PART 2 - MATERIALS

2.01 PAINT

A. Paint for marking lines and shall be factory-mixed non-bleeding paint specifically formulated for marking asphaltic concrete surfaces for line painting.

1. Paint shall be 100 percent acrylic latex emulsion type, containing no alkyds, butadiene styrene, or vinyls and shall be thinned with water only. The paint shall be suitable for use over all types of bitilithic surfaces, including weathered bituminous. When applied over bituminous concrete it shall not cause lifting, cracking, peeling, or other damage to the pavement. Thicknesses of coats shall be in accordance with manufacturer's recommendations. Acceptable manufacturers California Paints, Neyra Industries, The Glidden Co., or equal.

a) Colors shall be as noted on the Drawings.

2. Paint for area color coating shall be a fortified 100% acrylic latex emulsion with silica additive. Acceptable manufacturers California Paints, Nova Sport, Dalton Enterprises, Inc., or equal. Paint shall contain no alkyds, butadiene styrene or

vinyls and shall be thinned with water.

a) Fortification shall be by addition of silica sand, pre-mixed at manufacturer's plant. No sand or silica shall be added to the emulsion in the field.

3. Finish coat shall be as described above except that it shall be a non-fortified acrylic latex emulsion.

4. Color: Pigment dispersions in the color coating are to be of the best quality chrome oxides so as to obtain a permanent true color. Colors for area color coating shall be:

5. Colors for court shall be as shown on the Drawings.

PART 3 - EXECUTION

3.01 APPLICATION - GENERAL

A. Color coating is to be applied over existing color coating. Prepare as necessary to remove loose paint and to provide tight bond. Apply paint in sufficient number of layers to cover previous colors and design.

B. Paint shall be applied according to manufacturer's instructions. **Adhere to manufacturer's recommended curing period for new bituminous pavement prior to paint application which is generally a minimum of 28 days.**

B. Pavement surface should be dry and free of sand, grease, oil and other foreign substances prior to the application. The ambient air temperature is to be a minimum of 45 degrees Fahrenheit and rising at the start of paint application. Do not apply paint when rain is imminent.

C. Thickness of each coat shall be as recommended by the manufacturer

D. Paint shall be applied by brush, spray or roller, free of any fogging or overspray.

3.02 AREA PAINTING

A. Sweep and air clean area to be surfaced.

B. Apply two coats of fortified surface paint at a rate of approximately .05 gallon per square yard per coat, minimum, with additional coats as necessary to cover previous design.

C. Apply one coat of non-fortified finish paint at a rate of approximately .05 gallon per square yard.

D. Apply line paint as described below.

3.03 LINE PAINTING

A. Width of lines shall be 2".

B. Lines shall be accurately located and marked by snapping a chalked line. All surfaces shall be thoroughly cleaned before the lines are painted thereon. The paint shall be applied accurately within the limits shown on the plans. All lines shall be clear and distinct with sharply defined edges. At least two (2) hours shall elapse between the painting of the first and second coats. Protect painted lines until cured.

C. Edges of lines to be painted shall be masked prior to painting to insure sharp edges. Ragged lines will not be acceptable.

D. Apply two coats of line paints in specified color.

E. Remove masking tape and clean up work area.

3.04 GUARANTEE AND ACCEPTANCE

A. Painted lines and surfaces shall be guaranteed for a period of one year from final acceptance against cracking, peeling, checking, or other defect. The Contractor will repair, re-coat or otherwise make satisfactory, any failed lines or areas, at no cost to the Owner.

END OF SECTION

SECTION 02595

TRAFFIC PAVEMENT MARKING

PART 1 - GENERAL

1.01 GENERAL PROVISIONS

A. Attention is directed to the General Conditions of the Contract, all Divisions of the Specifications and the Contract Drawings, all of which apply to this section.

B. Examine and coordinate all Contract Drawings and other section of the specifications for requirements which affect work of this section whether or not such work is specifically mentioned in this section. Coordinate work with other trades to assure the steady progress of all work under the Contract. The Contractor shall refer to the Contract Documents for all new work and coordinate how it relates to this Section.

1.02 SCOPE OF WORK

A. Work under this Section shall include all labor, materials, services, equipment, transportation and accessories and the performance of all operations necessary to complete the work of this Section, as indicated on the Contract Drawings and/or as specified herein.

B. The work shall include, but is not limited to, the following:

1. Pavement markings for parking lot including parking space delineation, HC access aisle striping, and vehicular access no parking striping.

1.03 RELATED WORK

A. The following items are not included in this Section and will be performed under the designated Sections:

B.

1. Section 32 12 16 - Bituminous Concrete Paving

1.04 SUBMITTALS

A. Submit the following in accordance with the requirements of the General Conditions:

1. Paint: Submit manufacturer's product data demonstrating specification compliance for pavement marking paint.

(a) Submit manufacturer's directions for application, including permissible temperature for application and storage, drying time, coating thickness and application rates, and period of curing time prior to application to new bituminous concrete.

2. Submit installer name and evidence of qualifications.

1.05 QUALIFICATIONS

A. Installer shall be from a company with at least 5 years of experience in commercial painting.

1.06 REGULATORY REQUIREMENTS

A. Materials and handling of paint shall conform to all environmental and OSHA regulations.

1.07 DELIVERY STORAGE AND HANDLING

A. All packaged materials shall be delivered to the site in original unopened containers clearly indicating manufacturer name, brand name, and other identifying information. Paint shall be stored within the temperature ranges indicated by the manufacturer.

1.08 ENVIRONMENTAL REQUIREMENTS

A. Paint shall be applied within the temperature ranges recommended by the paint manufacturer.

PART 2 - MATERIALS

2.01 PAINT

A. Vehicular pavement line marking:

1. Paint for pavement line marking of parking lot shall be a fast dry water based road paint conforming to Federal Specification TT-P-1952 D or E Types I or II, or a regular dry water based road paint conforming to Federal Specification TT-P-1952B.

2. Paint for parking lines and striping shall be white.

3. Paint for International Symbol of Accessibility shall be white lines, on a blue background.

PART 3 - EXECUTION

3.01 APPLICATION OF PAVEMENT MARKINGS - GENERAL

A. Paint shall be applied according to manufacturer's instructions. Adhere to recommended curing period for new bituminous pavement prior to paint application.

B. Pavement surface should be dry and free of sand, grease, oil and other foreign substances prior to the application. The ambient air temperature is to be a minimum of 45 degrees Fahrenheit and rising at the start of paint application. Do not apply paint when rain is imminent.

3.02 VEHICULAR PAVEMENT LINE MARKING

A. Width of lines shall be 4" unless otherwise noted in the Drawings.

B. Apply two coats of paint in the locations and colors indicated on the drawings. Thickness of each coat shall be as recommended by the manufacturer. Painted markings are to be protected until they are dry enough to withstand traffic without tracking or being damaged.

1. Stencil handicapped parking spaces with the international symbol of access in white on a blue background.

3.03 GUARANTEE AND ACCEPTANCE

A. Painted lines and surfaces shall be guaranteed for a period of one year from final acceptance against cracking, peeling, checking, or other defect. The Contractor will repair, re-coat or otherwise make satisfactory, any failed lines or areas, at no cost to the Owner.

END OF SECTION

SECTION 02622

FIELD DRAINAGE SYSTEM

PART 1 - GENERAL

1.01 GENERAL PROVISIONS

A. The General provisions of the Contract, including General and Supplementary General Conditions, and Division 1 General Requirements, apply to work specified in this section.

1.02 DESCRIPTION OF WORK

A. Provide equipment and materials, and do work necessary to construct the athletic field drainage system as indicated on the Drawings and as specified. Work shall include but shall not be limited to:

.

1. Installation of panel drainage system and collection piping.

B. Related Work Specified in Other Sections:

1. Section 02100- Site Preparation
2. Section 02200 - Earthwork: Root Zone Mix
3. Section 02810 - Irrigation System
4. Section 02930 - Sodded Athletic Field

1.03 REFERENCES

A. Comply with applicable requirements of the following standards. Where these standards conflict with other specified requirements, the most restrictive requirement shall govern.

B. American Society for Testing and Materials (ASTM):

C. Massachusetts Department of Transportation Standard Specifications for Road and Bridge Construction.

1.04 SUBMITTALS

A. Manufacturer's literature for drain panels demonstrating compliance with the Specifications.

B. Samples: Panel Drain - 1 Sample

1.05 QUALITY ASSURANCE

A. The Contractor shall coordinate the installation of the athletic field subsurface drainage system with the irrigation system.

1.06 PRODUCT DELIVERY, STORAGE, AND HANDLING

A. Delivery and Storage:

1. Pipe, fittings, specials, appurtenances and accessories shall be delivered to and stored within the Contractor's work limits as shown on the Drawings.
2. Special care shall be exercised during delivery and storage to avoid damage to the products.
3. Products shall be stored so as to avoid unnecessary handling and in locations where they will not interfere with the Owner's operations or public travel.

B. Handling:

1. Pipe, fittings, special appurtenances and accessories shall be handled carefully with approved handling devices in strict conformance with the manufacturer's recommendations.
2. Products shall not be dropped nor shall products be otherwise dragged, rolled or skidded.

C. Products cracked, gouged, chipped, dented or otherwise damaged will not be approved and shall be removed and replaced at the Contractor's expense, unless the product can be repaired in a manner acceptable to the manufacturer and Engineer. All repairs shall be at the Contractor's expense.

PART 2 - PRODUCTS

2.01 DRAINAGE SYSTEM

A. The panel drainage system shall be geocomposite panel drain Sportsedge HQ6 Panel Drain (800-334-6057)or equal with the following properties:

1. The drain shall consist of a solid formed polystyrene perforated core fully wrapped with a non-woven spun-bound polypropylene filter fabric. Height shall be 6", width 1" minimum.

2. Fabric shall be glue bonded to the core.

3. Couplers, outlets, and geotextile endcaps shall be supplied by the Contractor as required and recommended by the manufacturer.

4. The subsurface drain system shall meet the following ASTM standards as a minimum: D 3350.

Physical Property	Unit of Measure	Typical Value	ASTM Test Method
FABRIC			
Grab Tensile	lbs	145	D-4632

Grab Elongation	%	60	D-4632
Puncture Resistance	lbs	50	D-4833
EOS(AOS)	US Std Sieve	70	D-4751
Flow Rate	gpm/ft3	80	D-4491
CORE			
Thickness	in	1	D-1777
Compressive Strength	psf	9,000	D-1621
Flow Capacity per Unit Width	gpm/ft	21	D-4716

B. Sand for trenches shall be as specified in Section 02200-Earthwork.

PART 3 - EXECUTION

3.01 INSTALLATION OF THE DRAINAGE SYSTEM

A. Install in accordance with manufacturer's recommendations.

B. The Contractor shall install the panel drainage system in the vertical orientation in accordance with the locations depicted on the drawings. Connections shall be made with manufacturer specific adaptors and connectors. The panel drain must have a physical connection to the collector pipe and existing drainage structures at locations indicated on the Drawings. All exposed ends shall be capped with manufacturer specific end caps to prevent migration of fines into the drainage system.

C. Install the edge collector pipes true to line and grade and as indicated on the Drawings.

D. The Landscape Architect will inspect and accept all buried piping prior to backfilling.

3.02 INSTALLATION OF THE DRAINAGE BACKFILL FOR PANEL DRAINS

A. Install the sand drainage soil compacted to 82% +/- 2 of maximum standard proctor.

B. Drainage sand shall be installed in trenches by use of a small rubber-turf tired tractor for handling and shall be shoveled into the trenches by hand shoveling. Protect drainage trenches and lines from caving and/or crushing by the use of wood planking over the top of trenches where it is necessary for the loader to cross drainage trenches.

END OF SECTION

SECTION 02667

WATER SERVICE SYSTEMS

PART 1 - GENERAL

1.01 GENERAL PROVISIONS

A. All of the Contract Documents, including the Contract Form, General Provisions, General Conditions, Supplemental Conditions, and all Attachments to the General Provisions, and Division 1 - General Requirements, apply to the work of this Section.

B. Examine and coordinate all Contract Drawings and other sections of the specifications for requirements which affect work of this section whether or not such work is specifically mentioned in this section. Coordinate work with other trades to assure the steady progress of all work under the Contract. The Contractor shall refer to the Contract Documents for all new work and coordinate how it relates to the installation of water service systems.

1.02 SCOPE OF WORK

A. Work under this section shall include tapping into the existing 10" water main in Pine Vale Road and the installation of a new 2" water service to support the new irrigation system and splash pad, as indicated on the drawings.

B. Responsibilities will include furnishing and installing of two (2) inch type “K” copper piping, tapping sleeves, corporation stops and boxes, curb stops and boxes, thrust blocks, straps and clamps for pipe restraints, strainers, backflow preventer, testing and disinfection (sterilization) of mains, installation of one (1) 1-1/2" water meter, and one (1) 2" inch backflow preventer, and all other specified work and connections as shown on the plans and details. The work by the Contractor shall be performed in accordance with the recognized plumbing standards and all applicable standards. The work shall include all fittings and piping and other appurtenances necessary for complete and proper installation of the work, including connections to the existing work. All lines shown are approximate and must be coordinated with other utilities or site improvements to be installed.

C. All work herein described and/or shown on the Plans shall be in strict accordance with the best-recognized practices for water service installations. The standards set forth in the selection of materials and supplies are intended to conform to those adopted by the City of Waltham, and the Contractor shall further familiarize himself with the Municipality’s requirements when the occasion or choice of materials or supplies so demand.

D. Per Municipality regulations and requirements, the Contractor performing the work of this section shall be a MA licensed master plumber.

E. The Municipality, through their authorized agents, reserves the right to make inspections of the work during its manufacture or progress.

F. Sheeting, shoring and bracing, excavation and backfill shall be accomplished in accordance with Section 02200 - Earthwork, the applicable provisions of the Standard Specifications, and OSHA Construction Regulations Title 29 CFR Part 1926. The cost of the sheeting, shoring and bracing, unclassified excavation and backfill shall be included under the Lump Sum Bid.

1.03 RELATED WORK

A. Section 02100 - Site Preparation and Demolition.
B. Section 02200 - Earthwork: Refer to Earthwork for excavation, backfill, and fill materials.
C. Section 02810 - Irrigation System.
D. Section 03300 - Cast-in-Place Concrete.
E. Section 15400 - Fountain

1.04 REFERENCES

A. The following standards and definitions are applicable to the work of this Section to the extent referenced herein:

1. Standard Specifications: Commonwealth of Massachusetts Standard Specifications for Highways and Bridges, latest edition.
2. OSHA Construction Regulations Title 29 CFR Part 1926.
3. ASME B16.1 Cast Copper Alloy Solder Joint Pressure Fittings.
4. ASTM B88 Seamless Copper Water Tube.
5. ASTM D1557 Test Methods for Moisture-Density Relations of Soils and Soil-Aggregate Mixtures Using 10 lb (4.54 Kg) Rammer and 18 inch (457 mm) Drop.
6. AWWA C500 Gate Valves, 3 through 48 in NPS, for Water and Sewage Systems.
7. AWWA C504 Rubber Seated Butterfly Valves.
8. AWWA C507 Ball Valves
9. AWWA C508 Swing-Check Valves for Waterworks Service, 2 in through 24 in NPS.
10. AWWA C509 Resilient Seated Gate Valves 3 in through 12 in NPS, for Water and Sewage Systems.
11. AWWA C800 Ball Valve Curb Stops and Corporation Stops
12. ASTM B-62 Ball Valve Curb Stops
13. ASTM D2241 Poly (VinylChloride) (PVC) Plastic Pipe(SDR-PR).
14. ASTM D2466 Poly (VinylChloride) (PVC) Plastic Pipe Fittings, Schedule 40.
15. ASTM D2855 Making Solvent-Cemented Joints with Poly (Vinyl Chloride) (PVC) Pipe and Fittings.

1.05 SUBMITTALS FOR REVIEW

A. Product Data: Provide data on pipe materials, pipe fittings, valves, hydrants and accessories.

1.06 SUBMITTALS AT PROJECT CLOSEOUT

A. Record actual locations of piping mains, valves, connections, thrust restraints, and invert

elevations.

B. Identify and describe unexpected variations to subsoil conditions or discovery of uncharted utilities.

PART 2 - MATERIALS

2.01 MATERIALS

A. Gate Valve: Gate valves for water lines shall be New York Pattern Metropolitan Type or AWWA C500-71, in accordance with requirements of the City of Waltham Water Department. Gate valves shall turn right to open and be rated at 200 psi working pressure; 350 psi hydrostatic test pressure. Gate valve outlet and connection shall be furnished with threaded joints.

1. Gate valve stems shall be manganese bronze having tensile strength of not less than 35,000 psi, and an elongation of not less than 15% in 2 inches.

2. Gate valves shall be furnished with 0-ring stem seat that utilizes two 0-rings. The upper 0-ring shall serve as the pressure seal. The design of the valve and seal plate shall be such that the seal plate can be fitted with new 0-rings when the valve is under pressure in the fully open position. Housing for the valve stem thrust collar shall be carefully machined and fully bronze lined.

3. Gate valve disc shall be cast iron and shall be accurately machined to receive bronze disc seat ring. The disc seat ring surface in contact with the iron disc and the conetail projections shall be rolled, peened or pressed into the machine grooves on the iron discs and when secured in place, a rough and finish cut shall be taken over the disc seat ring bearing surfaces.

4. Gate valve wedges shall be made of bronze.

B. Ball Valve Curb Stop: Ball valve curb stops for water lines shall be Mueller Co., 633 Chestnut Street, Suite 1200, Chattanooga, TN 37450, p 800-423-1323, f 217-425-7537, Mueller Mark II Oriseal Curb Valve Mueller 110 Model Number H-15219, or approved equal, cast bronze stop and waste, in accordance with requirements of the City of Waltham Water Department. Ball valves shall be rated at 300 psi working pressure; 350 psi hydrostatic test pressure. Ball valve outlet and connection shall be furnished with quick style compression connections.

1. Ball valve shall be furnished with integral checks to allow for 90° rotation only.

2. Ball valve shall be furnished with one piece cap and stem.

3. Ball valves shall be furnished with double Buna-N Stem O-Rings and seals.

4. Ball valves shall be furnished with TFE or Fluorocarbon Coated Brass Ball.

C. Service Clamps and Corporation Stops: Complete assembly, including service clamp, corporation stop, and bolts and nuts. Include service clamp and stop compatible with drilling machine.

1. Service Clamp: Cast iron or ductile iron with gasket and AWWA C800 threaded outlet for corporation stop, and threaded end straps

2. Corporation Stop connection for water lines shall be Mueller Co., 633 Chestnut Street, Suite 1200, Chattanooga, TN 37450, p 800-423-1323, f 217-425-7537, Mueller 300 Ball Corporation Valve Model Number B-25008N, or approved equal, cast bronze in accordance with requirements of the City of Waltham Water Department. Ball valves shall turn right to open and be rated at 300 psi working pressure; 350 psi hydrostatic test pressure. Ball valve outlet shall be furnished with quick style compression connection.

3. Corporation stop shall be furnished with molded nitrile (Buna-N) seals, 80 Duometer, sealed in place with adhesive.

4. Corporation stop shall be furnished with nitrile (Buna-N) O-Ring, 70 Durometer.

5. Corporation stop shall be furnished with flared copper service fitting threads.

6. Corporation stop shall be furnished with TFE or Fluorocarbon Coated 85-5-5-5 Red Brass Ball.

D. Tapping Sleeve and Tapping Valve: Complete assembly, including tapping sleeve, tapping valve, and bolts and nuts. Use sleeve and valve compatible with tapping machine.

1. Tapping Sleeve: Cast- or ductile-iron, 2-piece bolted sleeve with flanged outlet for new branch connection. Sleeve may have mechanical-joint ends with rubber gaskets or sealing rings in sleeve body. Include sleeve matching size and type of pipe material being tapped and of outlet flange required for branch connection

E. Copper Tubing

1. Copper pipe for buried service two (2) inch diameter and smaller, as required, shall be soft, annealed, seamless copper tubing conforming to Federal Specification WW-T-799E or ASTM Standard B88-76, Type “K”.

2. Copper service pipe for installation in meter pits, valves, manholes, and backflow preventer cabinets, 2 inch diameter and smaller, shall be ASTM B88, Type “K”, hard copper tubing.

3. The Contractor shall furnish the Owner with satisfactory evidence that the copper tubing meets the requirements of these Specifications.

4. Joints in the copper service shall be kept to a minimum.

a) For buried application, joints shall be made with cast brass three-part compression couplings or flared tube fittings conforming to ANSI Standard Specifications B 16.26, latest issue. Bends in copper service pipe, particularly gooseneck bends, shall be made with a tool especially designed for the purpose.

b) Pipe joints inside meter vaults and backflow preventer cabinets shall be fittings conforming to ANSI B 16.18 cast bronze solder fittings, or ANSI B 16.22 wrought copper solder fittings and couplings. Solder shall be ASTM B32, Grade *95* TA, up to 250 degrees. Solder threaded bronze fittings will be used for connections of pipe to meters, strainers, valves, backflow preventers and pipe nipples.

5. PVC Piping

a) PVC pipe shall be as sized on the drawings and details, Class 200, SDR 21, solvent weld PVC, ASTM No. D1784 as manufactured by Cresline or approved equal.

b) Fittings for all PVC piping shall be Schedule 40 solvent weld PVC as manufactured by Dura, Lasco, or approved equal.

c) PVC solvent shall conform to ASTM and be NSF approved. Solvent shall be appropriate for gluing of pipes and fittings up to 6 inches in size. Solvent shall be as manufactured by IPS, Rectorseal, Uni Weld, or approved equal and shall be used in conjunction with an appropriate primer.

6. Water Meters

a) Water meters shall be furnished by the City of Waltham Water and Sewer Department, and installed by the Contractor within the designated backflow preventer above ground cabinet. The water meters shall be a 1-½ inch for the irrigation system, Neptune T-l0, or approved equal, with provisions for a remote ARB reading device to be mounted to the backflow preventer cabinet.

7. Backflow Preventer

a) Backflow preventer shall be a 2” Reverse Principle Backflow Prevention Device (or Assembly), Watts #009-M2Q2, or approved equal and shall come complete with strainers, ball valves, and threaded couplings.. Final approval of device selection will be based on submittal of design data sheet to Waltham Water Department, Cross Connection Program.

b) Supply one complete rubber parts kit, item number RK009RT 009 which shall include diaphragm, two disc assemblies, stem O-rings, cover O-ring, two seat O-rings and RV seat O-ring, and shall be stored in the backflow assembly cabinet.

8. Concrete for Thrust Restraints: Concrete type specified in Section 03300.

PART 3 - EXECUTION

3.01 INSTALLATION

A. Refer to Section 02200 - Earthwork and the Drawings for excavation, backfill, compaction, and other trenching requirements.

3.02 PIPE AND FITTINGS

A. All pipe, fittings and such other items shall be carefully examined for defects immediately before lowering into the trench and no pipe or fittings shall be laid which is known to be defective in anyway. Any pipe or fitting discovered as defective after laying shall be promptly removed and replaced. Proper and suitable tools and appliances for the safe and convenient handling and laying of the pipe, fittings and appurtenances shall be used, and great care shall be taken to prevent damage to the pipe coating and lining. Pipe and fittings shall be thoroughly cleaned before being lowered into the trench and shall be kept clean until accepted in the completed work. Open ends shall be closed with wooden or other suitable bulkheads at all times when pipe laying is not actually in progress. Pipes shall be carefully lowered into trenches with rope slings or other mechanical means. Rolling or dropping the pipe into trenches will not be permitted. Whenever the pipe requires cutting to fit the line, the work shall be done only by experienced persons and in such a manner as to leave a smooth end at right angles to the axis of the pipe.

B. Each length of pipe, fitting or valve shall be firmly supported for its entire length upon original undisturbed trench bottom. Permanent blocking will not be permitted. Where temporary blocking is used, it shall be removed. The underside of the pipe, fittings or valve shall be completely filled and thoroughly compacted with bank gravel before refilling trenches. Fittings and valves shall be carefully set in the line, plumb and true to grade and thoroughly compacted to a firm and uniform bearing.

3.03 JOINTING

A. Jointing shall be in strict accordance with the manufacturer's recommendation for the type of joint being made. Jointing of pipe or fittings shall be made only by persons thoroughly skilled in this work.

3.04 ROUGHING-IN FOR WATER METERS

A. Rough-in piping and specialties for water-meter installation according to utility company's written instructions and requirements.

3.05 BACKFLOW PREVENTER, METERS AND RELATED APPURTENANCES

A. The installation of all new backflow preventer and meter and related valves, strainers, hangers, straps, clamps and other appurtenances shall be accomplished in a safe, and complete manner by licensed plumbers.

B. All work in this regard shall be completed in compliance with City of Waltham standards and industry requirements and to the satisfaction of the project representatives.

3.06 CONDUCTING TEST FOR LEAKAGE

A. Description

1. Test for leakage shall be conducted on all portions of completed water work. In trenches, the testing shall be conducted with partial backfilling over the barrel of the pipe, but all joints between the pipe, fittings and valves shall be left exposed for the duration of the tests. At the Engineer's direction, temporary backfilling of certain portions of the completed work may be required prior to conducting leakage tests.

2. All air shall be released and the mains completely filled with water, and after allowing twenty-four (24) hours for absorption, the internal pressure shall be built up to an equivalent hydrostatic head of three hundred-fifty (350) feet of water of one hundred-fifty (150) pounds per square inch, and so maintained for the full period of tests.

3. All visible leaks in the joints shall be stopped, and any cracks or defective pipe, fitting or valve shall be removed and replaced.

4. The test shall be conducted for a period of at least sixty (60) minutes after all visible leaks have been stopped, and the inflow of water from a force pump to maintain the required pressure shall not exceed seventy (70) gallons per inch of internal diameter per mile of pipe per day.

5. In case the specified rate of leakage is exceeded, the leaks shall be found and repaired, and the mains shall be re-tested until the required conditions are met.

3.07 DISINFECTION OF NEW MAINS

A. Upon completion, all water mains shall be disinfected as follows:

1. Pipes shall be completely filled with water; all air released, and then thoroughly flushed out in the amount twice the capacity of the section to be treated. A disinfecting solution of sodium hypochlorite shall be introduced into the main near the point of water supply, in the concentration of one hundred (100) parts of available chlorine per million parts of water. The main shall then be washed or bled from the extreme end opposite to the point of application of the disinfecting supply, and the washing continued until tests indicate the disinfecting solution has reached the end opposite to the point of application in the concentration of not less than fifty (50) parts available chlorine.

2. All gates shall then be closed, and the disinfecting solution left in the mains under full pressure for a period of not less than forty-eight (48) hours. The entire section shall then be repeatedly and thoroughly flushed out until all traces of chemicals are removed.

3. Samples of water shall then be taken by the Contractor and laboratory analysis made by him to determine the effectiveness of treatment.

4. Any main or section of pipe failing to meet laboratory standards for disinfecting shall be repeatedly treated until the desired results are obtained. A COPY OF LABORATORY REPORTS SHALL BE PROVIDED TO THE OWNER BY THE CONTRACTOR WITHIN FIVE (5) DAYS AFTER TESTING IS COMPLETED.

5. Particular attention is directed to the requirement that a double check valve installation shall be made in the water supply to the main under treatment, to prevent possible backflow or siphonage of treated solution into the distribution system in service.

3.08 OTHER DATA

A. All iron castings shall conform to the latest revisions of ASTM Designation A126 for physical and chemical requirements.

B. All ironwork shall be thoroughly cleaned and painted with two coats of asphaltum or other varnish or paint that the Engineer may approve. After the valves are assembled and tested, a third coat shall be applied to the exterior. All composition tool-finished work shall be left bright and unpainted.

C. All connections shall be made permanently watertight.

D. All other work required to complete the improvements listed in the Contract Documents shall be accomplished in accordance with the requirements of the City of Waltham.

END OF SECTION

SECTION 02670

BACKFLOW PREVENTER CABINET

PART 1 - GENERAL

1.01 GENERAL PROVISIONS

A. All of the Contract Documents, including the Contract Form, General Provisions, General Conditions, Supplemental Conditions, and all Attachments to the General Provisions, and Division 1 - General Requirements, apply to the work of this Section.

B. Examine and coordinate all Contract Drawings and other sections of the specifications for requirements which affect work of this section whether or not such work is specifically mentioned in this section. Coordinate work with other trades to assure the steady progress of all work under the Contract. The Contractor shall refer to the Contract Documents for all new work and coordinate how it relates to the installation of backflow preventer cabinets

1.02 SCOPE OF WORK

A. Provide equipment and materials, and do all work necessary to furnish and install one (1) Backflow Preventer Cabinet complete in place on a concrete pad as indicated on the Drawings and as specified.

B. Service lines, internal cabinet features and other related water work shall be accomplished in accordance with the applicable sections of these Specifications.

1.03 RELATED WORK

A. Section 02100 - Site Preparation and Demolition.
B. Section 02200 - Earthwork.
C. Section 02667 - Water Service Systems.
D. Section 02810 - Irrigation System
E. Section 15400 - Fountain

1.04 REFERENCE STANDARDS AND SPECIFICATIONS

A. Reference to specific standards, specifications and tests of the following technical societies, organizations, and governmental bodies may be made in the contract documents.

B. AASHTO - American Association of State Highway and Transportation Officials (tests or specifications). AASHTO or AASHO

C. ASTM - American Society for Testing and Materials.

D. Mass. Standard Specs. - Latest edition of the Standard Specifications for Highways,

Bridges and Waterways, 1988 Edition, the Commonwealth of Massachusetts, Department of Public Works, hereinafter referred to as "the Massachusetts Standard Specifications."

E. AWWA - American Waterworks Association.

1.05 SHOP DRAWINGS/MANUFACTURER'S CUTS AND SPECIFICATIONS

A. The Contractor shall submit to the Landscape Architect for approval six (6) copies of all materials and equipment proposed for use indicating manufacturers' names and addresses, identifying data and expected delivery dates. No consideration will be given to partial lists submitted from time to time. Intention of using specified materials and equipment shall not relieve the Contractor from submitting the above list, nor shall submission of the list relieve him from submission of shop drawings. Any item of material or of equipment not submitted for approval on the list will not be approved unless of the exact make and characteristics specified.

B. If the material or equipment is installed before it is approved, the Contractor shall be liable for the removal and replacement at no extra charge to the Owner, if, in the opinion of the Landscape Architect, the material or equipment does not meet the intent of the Contract Documents.

C. The Contractor shall submit the following information with all equipment shop drawings:

1. Manufacturer's certified scale drawings, cuts or catalogs, including installation details.

2. Manufacturer's specifications, including certified performance characteristics and capacity ratings, if applicable.

PART 2 - MATERIALS

2.01 BACKFLOW PREVENTER CABINET

A. The backflow preventer cabinet shall be a standard manufactured item or custom built, conforming to the Contract details and requirements herein. Local sources manufacturers of cabinets are Mass Electrical Apparatus, 42 Oakville Street, Lynn, MA 01905, phone 781-592-0410, fax 781-592-0986 or approved equal.

1. Material: 0.125 5052-H32 Aluminum.
2. Subpanel: 12 gauge steel painted white.
3. Hinge: Stainless steel continuous.
4. Main Door: Stainless steel drop handle with 3 point latching and padlock ready.
5. Welding: All seams are continuous weld ground smooth.
6. Door: Gasketed with 1/4" x 1" closed cell neoprene gasket PSA one side to obtain a weather tight seal.
7. Finish: Smooth black powder coat inside and out.

2.02 CEMENT CONCRETE

A. Forms, reinforcing, and cement concrete cast in place for the backflow preventer cabinet shall conform to Section 03300 - Cast-in-Place Concrete of these Specifications.

PART 3 - EXECUTION

3.01 INSTALLATION

A. Include all necessary transportation, shipping and handling as necessary to properly and completely install the specified cabinets.

3.02 CONCRETE BASE

A. Install concrete base as indicated on the Drawings. The concrete base shall be six inches larger than the specified cabinet, all around, and pitched at edges for positive drainage.

3.03 TOUCH-UP

A. Any surfaces of the specified cabinets that are chipped or scratched shall be wire brushed, primed and painted or otherwise restored to a flawless condition in a manner that is acceptable to the City Representative.

END OF SECTION

SECTION 02725

DRAINAGE AND SEWER PIPE

PART I - GENERAL

1.01 GENERAL PROVISIONS

A. All of the Contract Documents, including the Contract Form, General Provisions, General Conditions, Supplemental Conditions, and all Attachments to the General Provisions, and Division 1 - General Requirements, apply to the work of this Section.

B. Examine and coordinate all Contract Drawings and other sections of the specifications for requirements which affect work of this section whether or not such work is specifically mentioned in this section. Coordinate work with other trades to assure the steady progress of all work under the Contract. The Contractor shall refer to the Contract Documents for all new work and coordinate how it relates to the installation of drainage and sewer pipe.

1.02 SCOPE OF WORK

A. Under this Section the Contractor shall furnish all materials, equipment, labor, transportation, facilities and all operations and adjustments required for the installation of drainage and/or sewer pipe and all incidentals thereto.

B. Drainage and sewer pipe shall be placed in the sizes and lengths indicated on the plans. Gate valves shall be placed along the drain and sewer pipes at locations as shown on the plans.

C. Provide all coordination and pay all fees associated with installation of the sewer connection.

1.03 RELATED WORK

A. Section 01050 - Field Engineering.
B. Section 01700 - Project Closeout.
C. Section 02100 - Site Preparation and Demolition.
D. Section 02200 - Earthwork.
E. Section 02622 - Field Drainage System.
F. Section 02728 - Drainage Structures.

1.04 REFERENCES

A. The following standards and definitions are applicable to the work of this Section to the extent referenced herein:

1. ASTM A74 Cast Iron Soil Pipe and Fittings.
2. ASTM C76 Reinforced Concrete Culvert, Storm Drain, and Sewer

Pipe

3. ASTM C443 Joints for Circular Concrete Sewer and Culvert Pipe, using Rubber Gaskets.
4. STM D1557 Test Methods for Moisture-Density Relations of Soils and Soil-Aggregate Mixtures using 10 lb. (4.54 kg) Rammer and 18 inch (457 mm) Drop.
5. ASTM D2729 Poly(Vinyl Chloride) (PVC) Sewer Pipe and Fittings.
6. ASTM D1248 HDPE(High Density Polyethylene)(HDPE) Pipe and Fittings.
7. ASTM F2648 Test Methods for Non-Pressure (gravity flow) polyethylene (PE) pipes and fittings.

1.05 SHOP DRAWINGS/MANUFACTURER'S CUTS AND SPECIFICATIONS

A. The Contractor shall submit to the Landscape Architect for approval six (6) copies of all materials and equipment proposed for use indicating manufacturers' names and addresses, identifying data and expected delivery dates. No consideration will be given to partial lists submitted from time to time. Intention of using specified materials and equipment shall not relieve the Contractor from submitting the above list, nor shall submission of the list relieve him from submission of shop drawings. Any item of material or of equipment not submitted for approval on the list will not be approved unless of the exact make and characteristics specified.

B. If the material or equipment is installed before it is approved, the Contractor shall be liable for the removal and replacement at no extra charge to the Owner, if, in the opinion of the Landscape Architect, the material or equipment does not meet the intent of the Contract Documents.

C. The Contractor shall submit the following information with all equipment shop drawings:

1. Manufacturer's certified scale drawings, cuts or catalogs, including installation details.

2. Manufacturer's specifications, including certified performance characteristics and capacity ratings.

D. Product Data: The Contractor shall provide data indicating pipe and pipe accessories, connections, etc.

1.06 SAMPLES

A. The Contractor shall submit all samples as requested in accordance with the provisions of the General Conditions. Samples accepted will be returned to the Contractor within five (5) days and may be incorporated into the work. Samples not accepted will be returned for disposition by the Contractor.

B. One (1) square foot of filter fabric.

1.07 CODES, ORDINANCES AND PERMITS

A. All work shall be performed in strict accordance with local and state codes and regulations including OSHA Construction Regulations Title 29 CFR Part 1926.

B. Site utilities work shall be done in strict accordance with the Commonwealth of Massachusetts State Plumbing Code, latest edition, and all revisions thereto, and City of Waltham Engineering Department and Department of Public Works standards.

C. Any material or workmanship called for in the above-mentioned requirements, which are not specified or shown on the drawings, shall be furnished and installed by the Contractor as though same has been specifically mentioned or indicated. If the drawings and specifications are at variance with any regulations, the bidder shall notify the Landscape Architect ten (10) days before the date for submitting his bid. In many cases the drawings are in excess of the requirements in the codes and these shall be followed to the fullest. If the Contractor fails to notify the Landscape Architect at this time and installs work in variance with the above-mentioned codes and regulations, he shall assume the responsibility and the expense to rectify the installation.

D. Before commencing work, the Contractor shall obtain all permits necessary in connection with the installation of this equipment and pay fees required for same. He shall include the cost and back charge of installing any portion of the work where performed by municipal departments or utility companies.

1.08 SUBSTITUTIONS

A. Any reference to a particular device, product, material, article or system shall be interpreted as establishing a standard of quality, design, performance, or function, and shall not be construed as limiting competition.

1.09 RECORD DRAWINGS

A. The Contractor shall submit record drawings as specified in Section 01700 - Project Closeout.

1.10 SITE VISITATION

A. It is recommended that all prospective bidders visit the job site to acquaint themselves with the general and special conditions that may be encountered which will have a bearing on labor, transportation, cutting and patching, material handling and storage, and similar items, during the prosecution of the work. Failure to do so shall not relieve him of his responsibility for properly estimating the difficulties involved in the work to be performed under this section.

1.11 REFERENCE STANDARDS

A. References herein to any technical society, organization, group or body is made in accordance with the following abbreviations.

B. ASTM - American Society for Testing Materials.

C. AASHTO - American Association of State Highway and Transportation Officials.

D. AWWA - American Water Works Association.

E. ANSI - American National Standards Institute.

F. MHD Standard Specifications: The Commonwealth of Massachusetts Highway Department, Standard Specifications for Highways and Bridges, 1988.

G. Requirements of the City of Waltham Engineering Department and Department of Public Works.

1.12 MATERIALS AND WORKMANSHIP

A. It is the intent of these specifications to establish quality standards for all material and equipment incorporated in the work of this section. All material and equipment installed hereunder shall be new and shall be the best of each respective kind and type. Proper care shall be exercised in handling all equipment and materials herein specified.

B. The installation shall be as indicated on the drawings and in accordance with the manufacturer's recommendations as approved by the Landscape Architect. The installation shall be accomplished by workmen skilled in this type of work.

C. All conduits, pipes, structures, etc. in use and which are damaged during excavation, whether uncovered or not and whether or not they are shown on the plans, shall be repaired at the expense of the Contractor.

D. Storage of materials by the Contractor for incorporation into the work shall be off the site for other than material that is scheduled to be installed in the time span of two (2) working days. The storage site selected by the Contractor shall be made accessible to the City inspection forces at all times during normal working hours.

PART 2 - MATERIALS

2.01 GENERAL

A. Drawings and specifications are intended to supplement and explain each other. Materials not specifically mentioned in the specifications shall be as indicated on the drawings. Where conflicts occur between the drawings or specifications, or within either document itself, <u>the item or arrangement of better quality, greater quantity or higher cost shall be included in the Contractor's bid</u>. Where no specific kind or quality of material is given, a first-class standard article, shall be furnished.

2.02 DRAINAGE AND SEWER PIPE

A. PVC Pipe for use as storm drainage and sewer lines shall contain integrally belled and spigot type rubber gasketed joints conforming to ASTM 3034. Gaskets shall conform to ASTM F-477 and shall be marked to indicate nominal pipe size and proper insertion direction. The standard dimension ratio (SDR) of all pipe and fittings shall not exceed 35. Standard pipe lengths shall be twenty (20) feet unless otherwise approved. All necessary glues, gaskets and fittings shall be furnished in order to make the work complete and acceptable to the Engineer.

B. HDPE Pipe shall be ADS N–12 high density polyethylene pipe (HDPE) as manufactured by Advanced Drainage Systems (ADS), or approved equal, and shall conform to the requirements of AASHTO M-294, and ASTM F2648.

1. HDPE pipe shall be smooth wall perforated where indicated.

2. Pipe and fittings shall be made of polyethylene compounds which conform to the physical requirements of Type III, Category 3, 4 or 5, P23, P33, or P34, Class C per ASTM D-1248 with the applicable requirements defined in ASTM D-1248. Clean reworked material may be used.

3. Pipe shall be of the diameters shown on the Drawings.

C. HDPE Fittings shall conform to:

1. Fittings shall conform to ASTM F 2306. Bell and spigot connections shall utilize a spun-on or welded bell and valley or saddle gasket meeting the watertight performance of requirements of ASTM F 2306.

2. Couplers and pipe shall be from the same manufacturer.

3. Couplers shall be corrugated to match the pipe corrugations and the width shall not be less than one-half the nominal diameter of the pipe. Split couplers shall be manufactured to engage an equal number of corrugations on each side of the pipe joint.

4. One half inch diameter galvanized steel bolts and nuts or nylon ties as supplied by manufacturer shall be used on coupling bands.

D. Furnish pipe in the sizes indicated on the plans and/or details.

2.03 FILTER FABRIC

A. SUPAC 8NP by Phillips Fibers Corporation, AMOCO 4508, Trevira 1125, Mirafi 180N, or equal.

2.04 BEDDING AND COVER MATERIALS

A. Crushed Stone Bedding: Crushed stone as specified in Section 02200 - Earthwork.

B. Cover: Gravel as specified in Section 02200 - Earthwork.

2.05 APPURTENANCES

A. Provide all appurtenance and incidentals necessary to make the sewer and drainage pipe installation and connection complete and acceptable, including all materials necessary for the excavation, backfill, and compaction.

PART 3 - EXECUTION

3.01 PIPE INSTALLATION

A. Layout out utilities as required in Section 01050 - Field Engineering. Prior to excavating trenches the Contractor shall field verify all existing inverts and inform the Landscape Architect of any discrepancies. Record these inverts on Record Drawings.

B. The trench for the pipe shall be excavated to the required line and grade and be of sufficient width to permit thorough tamping of the fill material under the haunches and around the pipe. Soft or unsuitable material encountered below the normal bedding line of the pipe shall be removed as directed, replaced with selected material, gravel or crushed stone and thoroughly compacted. The bottom of the trench shall be shaped to conform to the curvature of the pipe. This bed shall also be excavated to accommodate the bells of pipes.

C. The pipe shall be laid true to the specified lines and grades where shown on the Plans and as directed. The bell end shall be toward rising grade and each section of pipe shall have a firm bearing throughout its length. Material placed around and under the pipe shall be free of stones larger than three (3) inches in diameter.

D. No load greater than three (3) tons shall be moved over any pipe until a fully-compacted backfill of at least two (2) feet has been placed over the top of the pipe. This minimum will be increased to three and one-half (3-1/2) feet for a forty thousand (40,000) pound single wheel load and to four (4) feet for a sixty thousand (60,000) pound single wheel load. However, compliance with these requirements is not to be construed as relieving the Contractor of any responsibility concerning damage to the pipe.

E. Bedding material for pipes shall conform to the requirements of Section 02200 - Earthwork and shall be placed between the pipe and the walls of the trench in layers not exceeding six (6) inches in depth and thoroughly compacted. Each layer, if dry, shall be moistened and then compacted by rolling or by tamping with mechanical rammers. Compaction with iron hand tampers having a tamping face not exceeding twenty-five (25) square inches in area may be allowed only after permission has been given by the Landscape Architect. Special care shall be taken to thoroughly compact the fill under the haunches of the pipe. This method of filling and compacting shall be continued until the material is level with the centerline of the pipe. The remainder of the filling shall consist of suitable backfill material, as defined in Section 02200 - Earthwork, placed in successive layers not more than six (6) inches in depth. Each layer shall be thoroughly compacted in accordance with AASHTO-T99 Standard Proctor Test.

3.02 DRAINAGE AND SEWER PIPE

A. Any pipe showing settlement after laying or which is not in true alignment or is otherwise unsatisfactory before final acceptance of the work shall be taken up and replaced or relayed by the Contractor without additional compensation..

3.03 WATER REMOVAL

A. If water is encountered during construction, provisions must be made to remove the water by sheeting and pumping as required, or laying the pipe with a crushed stone bed so that the laying of pipe and other work can be done under stable conditions, all in accordance with Section 2.04 of these Specifications.

END OF SECTION

SECTION 02728

DRAINAGE STRUCTURES

PART 1 - GENERAL

1.01 GENERAL PROVISIONS

A. All of the Contract Documents, including the Contract Form, General Provisions, General Conditions, Supplemental Conditions, and all Attachments to the General Provisions, and Division 1 - General Requirements, apply to the work of this Section.

B. Specifications for requirements which affect work of this section whether or not such work is specifically mentioned in this section. Coordinate work with other trades to assure the steady progress of all work under the Contract. The Contractor shall refer to the Contract Documents for all new work and coordinate how it relates to the installation of drainage and sewer pipe.

1.02 SCOPE OF WORK

A. The work to be done under this Section shall include the furnishing and installation of a drainage system consisting of catchbasins, slot drain, manholes, and storm water recharge chambers as indicated on the Drawings and as specified. The Contractor shall provide all material, labor, tools, equipment and transportation to complete these items.

1.03 RELATED WORK

A. Section 02100 - Site Preparation and Demolition.
B. Section 02200 - Earthwork.
C. Section 02725 - Drainage Pipe.
D. Section 03300 - Cast-in-Place Concrete.

1.04 REFERENCE STANDARDS AND SPECIFICATIONS

A. Reference to the standards, specifications and tests of technical societies, organizations and governmental bodies is made in the Contract Documents.

B. AASHTO - American Association of State Highway and Transportation Officials (tests or specifications).

C. ASTM - American Society for Testing and Materials.

D. MHD Standard Specifications: Mass. Standard Specs. - Standard Specifications for Highways, Bridges and Waterways, 1988 Edition, the Commonwealth of Massachusetts, Department of Public Works.

E. Commonwealth of Massachusetts, Department of Public Works, Construction

Standards, 1977.

F. Municipal Standard Specifications and Procedures, as applicable.

G. OSHA Construction Regulations Title 29 CFR Part 1926.

H. Americans with Disabilities Act Accessibility Guidelines (ADAAG).

1.05 CODES, ORDINANCES AND PERMITS

A. All work shall be performed in strict accordance with local and state codes and regulations.

B. Site utilities work shall be done in strict accordance with the Commonwealth of Massachusetts State Plumbing Code, dated September 1976, and all revisions thereto.

C. The Contractor shall secure all permits deemed necessary in connection with the installation of this equipment and pay fees required for same. He shall include the cost and back-charge of installing any portion of the work where performed by municipal departments or utility companies.

1.06 SUBMITTALS / SHOP DRAWINGS

A. Shop drawings shall be submitted to the Engineer for all equipment. Six (6) copies shall be submitted and shall include cuts, scale drawings, installation details, manufacturer's specifications, certified performance characteristics and capacity ratings.

B. No material or equipment may be purchased or installed prior to the submission and written approval of the shop drawings.

C. Product Data: Provide data indicating, catch basins, frames and grates, etc.

D. One (1) square foot of filter fabric.

PART 2 - MATERIALS

2.01 CEMENT CONCRETE

A. Material shall comply with Section 03300 of these Specifications.

2.02 PRECAST CONCRETE DRAINAGE STRUCTURES

A. All precast concrete units shall conform to Section M4.02.14 of the Standard Specifications in all aspects, and to the City of Waltham Standard Details for Drainage Structures as applicable.

B. Refer to the Details in the Contract Drawings.

2.03 CASTINGS

A. Iron castings for Catch Basins & Manholes (frames, grates and covers) shall conform to Mass Highway Construction Manual standard designs and to the requirements of AASHTO Designation M105, Class No. 30, Gray Iron Castings, unless otherwise specified. Test Bar B, 1.20 inches in diameter.

1. Catch basin frame and grate casting(s) shall be 24" round grate conforming to ADA requirements.

2. Manhole Frames and Covers: Cover shall be of minimum weight of 150 pounds, HD20 loading, solid cover, with a pick-hole, with water tight top flange complying with the requirements of the City of Waltham Engineering Department.

2.04 STORM WATER RECHARGE CHAMBERS

A. Recharge units and accessories shall consist of high molecular weight/high density polyethylene material. The chambers and all accessories shall be suitable for AASHTO HS20-44 loading. The units shall be manufactured in accordance with AASHTO M-294. Joints and fittings shall conform to AASHTO M-252. Shop Drawings and Design Details shall be submitted to the Engineer for review.

B. Stormwater Retention System Filter Aggregate (Bedding): Shall consist of crushed stone that is hard, durable stone, free from clay, loam, or deleterious material. The material shall consist of 1-1/2" stone. Gradation shall conform to Section M2.01.1 of the "Standard Specification".

C. Provide clean-out structures as shown on the Drawings.

2.05 FILTER FABRIC

A. SUPAC 8NP by Phillips Fibers Corporation, AMOCO 4508, Trevira 1125, Mirafi 180N, or equal

PART 3 - EXECUTION

3.01 Structures of various types and depths shall be constructed to the line and grades, dimensions and design shown on the plans and as directed with the necessary frames, gratings, covers, aluminum steps, etc., and in accordance with these Specifications after verification of inverts of utilities to remain.

3.02 The bricks and blocks (if required) shall be wetted as necessary before laying. All joints in brick masonry shall be thoroughly flushed full of mortar and no joints on the inside face shall be greater than one-quarter (1/4) inch. After the bricks and blocks are laid up, the outside of the structure shall be plastered with one-half (½) inch thick mortar coat.

3.03 Connections will be carefully made to all existing and proposed lines to the grades and elevations shown on the contract drawing.

3.04 All catch basins shall have a cast iron hinged metal hood trap installed over the outlet pipe or an oil trap outlet as detailed in the drawings. Use twelve (12) inch hoods, unless sizes equal to the specified pipe sizes are available.

3.05 Unless otherwise directed or specified, two (2) weep holes shall be built into the walls of all new structures. Each weep hole shall consist of a section of four (4) inch pipe or equivalent opening to carry water through the wall of the structure. The outside end of the pipe or opening shall be covered with a one-quarter (1/4) inch mesh galvanized wire screen 23 gauge satisfactorily fastened against the wall. The drain to the weep hole shall be excavated and back-filled with two (2) cubic feet of broken rock or crushed stone. The crushed stone shall be placed against and over the end of the pipe or opening with a section of filter cloth to prevent the entrance of fine material. Only one (1) type of weep hole shall be used consistently throughout the project.

3.06 Suitable materials obtained from the excavation or from borrow shall be placed between the outside of the structure and the limits of the excavation, uniformly distributed in successive layers not exceeding six (6) inches in depth and thoroughly compacted by tamping with mechanical rammers or tampers. When required, the backfill material shall be moistened during the compacting. Compaction with iron hand tampers having a tamping face not exceeding twenty-five (25) square inches may be allowed, but only after permission has been given by the Engineer.

3.07 All materials removed in the excavation for catch basins, manholes, or storm water recharge units and remaining after the filling about the finished structure has been made shall be used wherever possible within the project or removed and satisfactorily disposed of outside of the project limits without additional compensation.

3.08 The embedded ends of the aluminum ladder steps shall be painted with zinc chromate or bitumastic, and allowed to completely dry before they are installed. Installation shall be as shown on the plans.

3.09 Frame castings for structures shall be set in full mortar beds true to the lines and grades as directed.

3.10 Where directed, the castings shall be temporarily set at such grades as to provide drainage during the construction.

3.11 In general, all methods for installation of the catch basin and manhole units, brick adjustments and mortaring, and installation of frames, grates and covers, shall conform to Section 201 of the "Standard Specifications".

3.12 Installation of Storm Water Recharge Units:

A. Form bottom of excavation clean and smooth to correct elevation.

B. Stormwater recharge chambers shall be installed as per manufacturers requirements

and guidelines, and as shown on drawings.

C. Establish elevations and pipe inverts for inlets and outlets as indicated.

END OF SECTION

SECTION 02730

DECK DRAINS

PART 1 - GENERAL

1.01 GENERAL PROVISIONS

A. Attention is directed to the General Conditions of the Contract, all Divisions of the Specifications and the Contract Drawings, all of which apply to this section.

1.02 DESCRIPTION OF WORK

A. This Section specifies furnishing and installing:

1. Installation and bonding of stainless steel deck drains for spray play features area.

1.03 RELATED SECTIONS

A. Section 03300 - Cast-in-Place Concrete.
B. Section 02920 - Water Spray Equipment

1.04 SUBMITTALS

A. Product Data: Submit manufacturer's data demonstrating compliance with the Specifications.

1. Include complete documentation relating to all the specified features and manufacturer's sales literature, specification sheets, detailed installation instructions, operation and maintenance manuals, and finish choices.

1.05 DELIVERY, STORAGE, AND HANDLING

A. Deliver and store deck drains with sealing plugs in ends or with end protection.

B. Protect deck drains, fittings, and seals from dirt and damage.

1.06 QUALITY ASSURANCE

A. Furnishing and installation of deck drains shall comply with the rules and regulations of the Massachusetts Architectural Barriers Board CMR 521 and the 2010 ADA Standards for Accessible Design, U.S. Department of Justice.

1.07 REFERENCES

A. Mass Highway Department Standard Specifications for Highways and Bridges, 1995 Edition.

PART 2 - PRODUCTS

2.01 DECK DRAINS

A. Deck Drains for spray deck shall be manufactured by Zurn Industries, LLC, 1801 Pittsburgh Avenue, Erie, Pennsylvania 16502, Phone 855-663-9876, or approved equal:

1. Deck Drains shall be Zurn medium duty floor drain Model No. Z550 conforming to the following:

a) Standard: ASTM A48 Class 35B Grey Cast Iron. 48.

b) Body: 12 inch (305mm) diameter Dura-Coated cast iron body with bottom outlet, seepage pan and combination membrane flashing clamp and frame for medium-duty, sediment bucket with stainless steel mesh liner, heel-proof slotted grate.

c) Grate: 9-inch (229mm) as indicated on the drawings diameter heel proof, non tilt, vandal proof secured top grate with polished nickel bronze top complying with ADA regulations for spacing.

d) Outlet: Bottom, 4-inch (152mm) threaded.

e) Provide UL approved bonding lug.

PART 3 – EXECUTION

3.01 DECK DRAINS

A. Deck drain body shall be cast into concrete deck in strict accordance with manufacturer's installation instructions.

B. Deck drains shall be connected to bonding grid as shown on the Drawings and in accordance with manufacture's instructions.

3.02 CONCRETE PLACEMENT

A. Comply with requirements in Section 03 30 00 "Cast-in-Place Concrete" for concrete and reinforcing.

B. Place cast-in-place concrete according to ACI 318/318R.

3.03 CONNECTIONS

A. Drawings indicate general arrangement of piping, fittings, and specialties.

B. Make connections to new piping so finished Work complies as nearly as practical with requirements specified for new Work.

C. Use commercially manufactured wye fittings for drainage piping connections.

D. Complete connection to drainage system.

END OF SECTION 02730

SECTION 02805

BENCHES & PICNIC TABLES

PART 1- GENERAL

1.01 GENERAL PROVISIONS

A. All of the Contract Documents, including the Contract Form, General Provisions, General Conditions, Supplemental Conditions, and all Attachments to the General Provisions, and Division 1 - General Requirements, apply to the work of this Section.

1.02 SCOPE OF WORK

A. Work under this Section shall include all labor, materials, services, equipment, transportation and accessories and the performance of all operations necessary to complete the work of this Section, and as indicated on the Drawings and as specified.

B. The work shall include, but is not limited to, the following:

1. Benches (Steel benches with back, Recycled Plastic Benches with back, and Backless Recycled Plastic Benches)

2. Recycled Plastic Picnic Tables

1.03 RELATED SECTIONS

A. Section 02200 – Earthwork
B. Section 02510 – Bituminous Concrete Paving
C. Section 02515 – Precast Pavers
D. Section 03300 – Cast-in-Place Concrete

1.04 SUBMITTALS

A. Concrete mix design for footings.
B. Manufacturer's literature demonstrating compliance with these Specifications.
C. Manufacturer's installation instructions.
D. Color charts of manufacturer's standard color choices.
E. Manufacturer's written warranties.
F. Maintenance instructions, including recommended methods for repairing damage & abrasions to the powder coat finish.

1.05 REFERENCE STANDARDS

A. All work shall comply with the minimum standards of the latest editions of the following codes and specifications, subject to modifications and amendments outlined herein:

1. Americans with Disabilities Act Accessibility Guidelines (ADAAG
2. Massachusetts Architectural Access Board Regulations, CMR 521 (MAAB)

1.06 DELIVERY, STORAGE AND HANDLING

A. Deliver, store, and handle metal fabrication items to prevent damage and deterioration. Store assembled items off the ground.

1.07 EXAMINATION OF SITE AND DOCUMENTS

A. The Contractor shall inform him/herself of existing conditions of the site before submitting his/her bid and shall be fully responsible for carrying out all required site work to fully and properly execute the work of the Contract.

PART 2 – PRODUCTS

2.01 RECYCLED PLASTIC SITE FURNITURE

A. Recycled Plastic lumber shall be composed of a minimum of 90% high density polyethylene (HDPE), all of which shall be derived from recycled material.

B. Recycled plastic shall have a ten-year warranty against structural failure, splitting, cracking, or splintering during that period.

2.02 FINISH FOR STEEL FRAMES, SUPPORTS AND STEEL BENCHES

A. Finish for steel frames for benches and picnic tables shall be powder-coating equivalent to the following:

1. All parts shall be processed through an 8-stage phosphorous wash system.
2. Parts shall be coated with zinc-rich epoxy primer to an average of 4-5mils.
3. Parts shall be finished with a top coat of TGIC-polyester powder to an average of 4-5 mils.
4. Powder-coat shall be cured with infrared and convection heat for approximately 20 minutes.
5. Finished parts shall comply with the following ASTM Standards for coating and coating method: ASTM-D-523, ASTM-D-3363, ASTM-D-1737, ASTM-D-3359, ASTM-D-2794, ASTM-B-117 and ASTM-D-3451.

2.03 RECYCLED PLASTIC BENCHES WITH BACKS

A. Recycled plastic benches with backs shall be Dumor Model 88 or equal product conforming to the following:

1. Benches shall be dimensioned as shown on the drawings.
2. Provide surface mounted option.

3. Supports shall be 3/8” x 4-1/2” ASTM A36 carbon steel flat bar and 3” x 3” x ¼” wall ASTM A500 steel tubing.
4. Seat slats shall be manufactured from 3” x 6” and 3” x 4” nominal HDPE recycled plastic slats.
5. Top and bottom slats shall be “bull-nose” profile.
6. Expansion anchors shall be stainless steel.

2.04 RECYCLED PLASTIC BACKLESS BENCHES

A. Backless benches shall be Dumor Model 163 or equal product conforming to the following:

1. Supports shall be 3” x 3” x ¼” wall ASTM A500 steel tubing, 3/8” x 4-1/2” ASTM A36 carbon steel flat bar and ½” x 3” ASTM A36 carbon steel flat bar.
2. Seat assembly shall be slats manufactured from 2” x 3” and 3” x 4” nominal HDPE recycled plastic slats.
3. Seat brace shall be manufactured from 1” (1 5/16” OD) ASTM A500 Schedule 40 steel tubing and 3/16” thick ASTM A36 steel plate.
4. Expansion anchors shall be stainless steel.

2.05 RECYCLED PLASTIC PICNIC TABLES

A. Picnic tables shall be sized as shown on the Drawings and shall be Dumor Model 100 series or equal conforming to the following:

1. Table and seat support shall be 3” x 3” x ¼” wall ASTM A500 steel tubing and ½” x 3” ASTM A36 carbon steel flat bar.
2. Table top assembly shall be 1” (1 5/16 OD) ASTM A500 Schedule 40 steel tubing, 3/16” thick ASTM A36 steel plate, 3” x 4” and 3” x 6” nominal HDPE recycled plastic slats.
3. Seat assembly shall be 1” (1 5/16” OD) ASTM A500 Schedule 40 steel tubing, 3/16” thick ASTM A36 steel plate, 3” x 4” and 3” xx 6” nominal HDPE recycled plastic slats.
4. Anchors shall be stainless steel expansion bolts.

2.06 STEEL BENCH WITH BACK

A. Bench shall be Dumor Model 118 or equal conforming to the following:

1. End supports shall be 2” x 2” x 11 gauge ASTM A513 steel tubing.
2. Seat assembly shally be 1” x 1” x 13 gauge ASTM A513 steel tubing.
3. Expansion bolts for anchoring shall be stainless steel.

PART 3 - EXECUTION

3.01 GENERAL REQUIREMENTS

A. Site improvements shall be installed in accordance with the Drawings and approved Shop Drawings. Site improvements shall be installed in a level, plumb condition, true to the lines and grades shown on plans.

B. Shim bolt connections as necessary and secure bolts. Exposed bolts shall be fastened with an approved semi-permanent adhesive to protect against vandalism.

C. Install site furniture level and plumb, true to line and grade, and at height shown on the Drawings and recommended by the manufacturer. Where necessary provide shims to level.

D. Field touch-up all abraded or scratched surfaces with manufacturer's recommended paint and/or cold galvanizing materials.

3.02 CONCRETE FOOTINGS

A. Cast-in-place concrete footings for site improvements shall be conform to the requirements of Section 03300 - Cast-in-place Concrete and shall be 4,000 psi minimum strength at 28 days.

B. Compacted gravel backfill shall conform to the requirements of Section 02200 - Earthwork.

END OF SECTION

SECTION 02810

BICYCLE RACKS

PART 1 - GENERAL

1.01 GENERAL

A. Attention is directed to the General Conditions of the Contract, all Divisions of the Specifications and the Contract Drawings, all of which apply to this Section.

1.02 DESCRIPTION OF WORK

A. Work under this Section shall include all labor, materials, services, equipment, transportation and accessories and the performance of all operations necessary to complete the work of this Section, as indicated on the Contract Drawings and/or as specified herein and includes but is not limited to the following:

1. Loop Bicycle Racks on Concrete Pad

B. Related Work

1. Section 03 30 00 - Cast-in-Place Concrete

1.03 SUBMITTALS

A. Submit the following in accordance with the requirements of Article V. 2 of the General Conditions and Section 01 33 00 Submittal Procedures:

1. Manufacturer's literature demonstrating compliance with the Specifications for recycled wood, steel supports, and steel finishes

2. Manufacturer's standard color choices for steel finishes

1.04 DELIVERY, STORAGE AND HANDLING

A. Deliver, store, and handle metal fabrication items to prevent damage and deterioration.

B. Store assembled items off the ground.

1.05 REFERENCE STANDARDS

A. Work shall comply with the minimum standards of the latest editions of the following codes and specifications, subject to modifications and amendments outlined herein.

1. American Institute of Steel Construction, (AISC).
2. American Welding Society, (AWS)
3. American Society for Testing and Materials, (ASTM).
4. National Association of Architectural Metal Manufacturers, (NAAMM).

PART 2 - MATERIALS

2.01 PRODUCTS

A. Bicycle Racks shall be one of the following models or equal:

1. Dumor Series 83, local representative M.E. O'Brien & Sons, Medfield, MA, Tel:508-359-4200

2. Heavy Duty Hoop Rack" as manufactured by Dero Bike Rack Company, Minneapolis, MN, Tel 612-359-0689,

3. Madrax Challenger Plus Bike Rack, Madrax, Inc. Middleton, WI Tel: 800-448-7931

B. Racks shall conform to the following:

1. Pipe for loop shall be 2" schedule 40 minimum.

2. Finish for steel loop shall be TGIC UV resistant powder coat of no less than 6 mils thickness.

a) Prior to application of powder coat, steel shall have been prepared for painting by hard sandblasting, and then coated with an epoxy primer electrostatically applied. .

b) Color shall be chosen by the Owner from manufacturer's standard colors.

PART 3 - EXECUTION

3.01 INSTALLATION

A. Bicycle Racks shall be fabricated and fastened in accordance with the Drawings and approved Shop Drawings.

B. Surface mount rack into concrete pad.

C. Install level and plumb, true to the lines and grades shown on the Drawings.

D. Shim bolt connections as necessary and secure bolts. The Contractor shall render all connections vandal-proof by a method approved by the Project Engineer.

E. Field touch-up abraded or scratched surfaces with manufacturer's recommended cold-galvanizing material and paint.

END OF SECTION

SECTION 02810

IRRIGATION SYSTEM

PART 1 - GENERAL

1.01 GENERAL REQUIREMENTS

A. All of the Contract Documents, including the Contract Form, General Provisions, General Conditions, Supplemental Conditions, and all Attachments to the General Provisions, and Division 1 - General Requirements, apply to the work of this Section.

B. Coordinate work of this Section with other underground utilities and with trades responsible for their installation. Refer to respective Drawings pertaining to other work.

1.02 SCOPE OF WORK

A. The irrigation system shown on the Drawings and described within these Specifications represents a new controller, turf and landscape irrigation system supplied from municipal water. The system is designed for 50 gallons per minute. Minimum 75-psi dynamic pressure at full system flow is required from the irrigation contractor's point of connection.

B. Work to be done includes furnishing all labor, materials, equipment and services required to complete all irrigation work indicated on the Drawings, as specified herein, or both.

C. The mechanical point of connection for the irrigation system piping, generally where shown on the drawings.

D. The electrical point of connection for the irrigation system shall be to a new controller to be located in the new electrical enclosure as shown on the drawings.

E. The Drawings and Specifications must be interpreted and are intended to complement each other. The Contractor shall furnish and install all parts, which may be required by the Drawings and omitted by the Specifications, or vice versa, just as though required by both. Should there appear to be discrepancies or question of intent, the Contractor shall refer the matter to the Owner's Representative for decision, and his interpretation shall be final, conclusive and binding.

F. Changes to the Drawings necessary to avoid any obstacles shall be made by the Contractor with the approval of the Owner's Representative.

G. Trench excavation, back filling and bedding materials, together with the testing of the completed installation shall be included in this work.

H. The work shall be constructed and finished in every workmanlike and substantial manner, to the full intent Drawings and Specifications. All parts necessary for the respect in a good. and meaning of the proper and complete execution of the work, whether the same may have been specifically mentioned or not, or indicated on the Drawings, shall be done or furnished in a manner corresponding with the rest of the work as if the same were specifically herein described.

I. Record Drawing as well as Operating & Maintenance Manual generation, in accordance to these specifications shall also be included in this work.

1.03 RELATED WORK

A. Carefully examine all of the Contract Documents for requirements that affect the Work of this Section.

1. Section 02200 - Earthwork.

2. Section 02510 - Bituminous Concrete Paving.

3. Section 02725 - Drainage and Sewer Pipe.

4. Section 02780 - Unit Pavers.

5. Section 02930 - Sodded Lawn.

6. Section 03300 - Cast-In-Place Concrete

1.04 ORDINANCES, PERMITS AND FEES

A. The Work under this Section shall comply with all ordinances and regulations of authorities having jurisdiction.

B. The Contractor shall obtain and pay for any and all permits, tests and certifications required for the execution of Work under this Section.

C. Furnish copies of Permits, Certifications and Approval Notices to the Owner's Representative prior to requesting payment.

D. The Contractor shall include in their bid any charges by the Water Department, Utility Company, or other authorities for work done by them and charged to the Contractor.

1.05 EXAMINATION OF CONDITIONS

A. The Contractor shall fully inform himself of existing conditions on the site before submitting his bid, and shall be fully responsible for carrying out all work required to fully and properly execute the work of the Contract, regardless of the conditions encountered in the actual Work. No claim for extra compensation or extension of time will be allowed on account of actual conditions inconsistent with those assumed, except those conditions described in the GENERAL CONDITIONS.

1.06 QUALITY ASSURANCE

A. Installer: A firm which has at least five (5) years experience in work of the type and size 'required by this Section and which is acceptable to the Owner's Representative.

B. References: The Contractor must supply three references for work of this type and size with their bid including names and phone numbers of contact person(s).

C. Applicable requirements of accepted Standards and Codes shall apply to the Work of this Section and shall be so labeled or listed:

1.	ASTM D P1784	Rigid Poly (Vinyl Chloride) (PVC) Compounds and Chlorinated Poly (Vinyl Chloride) (CPVC) Compounds.
2.	ASTM D 1785	Poly (Vinyl Chloride) (PVC) Plastic Pipe, Schedules 40, 80, and C1200.
3.	ASTM D P2464	Threaded Poly (Vinyl Chloride) (PVC) Plastic Pipe Fittings, Schedule 80.
4.	ASTM D 2466	Poly (Vinyl Chloride) (PVC) Plastic Pipe Fittings, Schedule 40.
5.	ASTM D 2564	Solvent Cements for Poly (Vinyl Chloride) (PVC) Plastic Piping Systems..
6.	ASTM D P2737-99	Polyethylene (PE) Pressure rated tube.

7. National Plumbing Code (NPC)

8. National Electric Code (NEC)

9. National Sanitary Foundation (NSF)

10. American Society of Agricultural Engineers (ASAE)

11. Underwriters Laboratories, Inc. (UL)

12. Occupational Safety and Health Regulations (OSHA)

1.07 TESTS

A. Observation: The Owner's Representative will be on site at various times to insure the system is being installed according to the Specifications and Drawings.

B. Coverage Test: After completion of the system, test the operation of entire system and adjust sprinklers as directed by the Owner's Representative. Demonstrate to the Owner's Representative that all irrigated areas are being adequately covered. Furnish and install materials required to correct inadequacies of coverage due to deviations from the Drawings or where the system has been willfully installed when it is obviously inadequate or inappropriate without bringing it to the attention of the Owner. See Part 3 - Execution.

C. The Owner's Representative shall be notified 48 hours in advance for observations.

D. During final observation, the contractor shall be responsible for having two-way communication and sufficient personnel to provide instantaneous communication between the observation area and the controller for the system.

1.08 SHOP DRAWINGS

A. The Contractor shall provide copies of product specification sheets on all proposed equipment to be installed to the Owner's Representative for approval prior to the start of work, in accordance with the parameters of Division-i. Work on the irrigation system may not commence until product sheets are submitted and approved. Submittals shall be marked up to show proper nozzles, sizes, flows, etc. Equipment to be included:

1. Sprinkler Heads, Spray Heads.

2. Valves: Manual and Automatic.

3. Valve Boxes.

4. Pipe and Fittings.

5. Wire and Connectors.

6. Automatic Controller.

7. Quick Coupling Valves.

8. Miscellaneous Materials.

B. Project Record Documents:

1. The Contractor shall provide and keep up-to-date a complete redlined Record Set of Drawings of the system as the project proceeds. Drawings shall be corrected daily, showing every change from the original Drawings and Specifications. Record Drawings shall specify and exactly locate sprinkler type; pop up height and nozzle for each sprinkler installed. Each valve box location to be referenced by distance from a minimum of two permanent locations. Controller(s), rain sensor(s), quick coupling valves, water meters, back flow prevention device and all other equipment shall be indicated on the drawings. All wire routing, wire size and splices shall be indicated. Main line pipe and wire route shall have two (2) distinctly different graphic symbols (line types). Prints for this purpose may be obtained from Owner's Representative at cost. This redlined record set of drawings shall be kept at job site and shall be used only as a record set.

2. This redlined set of documents shall also serve as work progress sheets and shall be the basis for measurement and payment for work completed. This record set of drawings shall be available at all times for observation and shall be kept in a location designated by Owner's Representative. Should this record set of drawings not be available for review or not be up-to-date at the time of the observation, it will be assumed no work has been completed. Provide copies of the redlined record set of drawings for Owner's Representative review on a monthly basis.

3. Make neat and legible notations on this record set of drawings daily as the work proceeds, showing the work as actually installed. For example, should a piece of equipment be installed in a location that does not

match the plan, indicate that equipment in a graphic manner in the location of installation and so as to match the original symbols as indicated in the irrigation legend. Should the equipment be different from that specified, indicate with a new graphic symbol both on the drawings and the irrigation legend. The relocated equipment dimensions and northing and easting coordinates should then be transferred to the appropriate drawing in this record set of drawings at the proper time.

4. On or before the date of final field observation, deliver corrected and completed AutoCAD computer plots of "record drawings" on vellum and AutoCAD electronic files on disk to Owner's Representative as part of contract closeout. Delivery of plots will not relieve Contractor of the responsibility of furnishing required information that may have been omitted from the prints.

C. At the end of each segment of the project the contractor shall submit the following to the Owner's Representative.

1. Plumbing permits: If none required, so state.

2. Material approvals.

3. Pressure line tests: By whom approved and date.

4. Materials furnished: Recipient and date.

1.09 DELIVERY, STORAGE AND HANDLING

A. Store and handle all materials in compliance with manufacturer instructions and recommendations. Protect from all possible damage. Minimize on-site storage.

1.10 GUARANTEE

A. The Contractor shall obtain in the Owner's name the standard written manufacturer's guarantee of all materials furnished under this Section where such guarantees are offered in the manufacturer's published product data. All these guarantees shall be in addition to, and not in lieu of, other liabilities that the Contractor may have by law.

B. In addition to the manufacturers guarantees the Contractor shall warrant the entire irrigation system, both parts and labor for a period of one (1) year from the date of acceptance by the Owner.

C. As part of the one-year warranty the Contractor shall perform the first year-end

winterization and spring start-up for the irrigation system.

D. Should any problems develop within the warranty period because of inferior or faulty materials or workmanship, they shall be corrected to the satisfaction of the Owner's Representative at no additional expense to the Owner.

E. A written warranty showing date of completion and period of warranty shall be supplied upon completion of each segment of the project.

1.11 COORDINATION

A. The Contractor shall at all times coordinate his work closely with the Owner's Representative to avoid misunderstandings and to efficiently bring the project to completion. The Owner's Representative shall be notified as to the start of work, progression and completion, as well as any changes to the drawings before the change is made. The Contractor shall also coordinate his work with that of his sub-contractors.

B. The Contractor shall be held responsible for and shall pay for all damage to other work caused by his work, workmen or sub-contractors. Repairing of such damage shall be done by the Contractor who installed the work, as directed by the Owner's Representative.

1.12 MAINTENANCE AND OPERATING INSTRUCTIONS

A. Contractor shall include in their Bid an allowance for four (4) hours of instruction of Owner and/or Owner's personnel upon completion of check/test/start-up/adjust operations by a competent operator (The Owner's Representative office shall be notified at least one (1) week in advance of check/test/start-up/adjust operations).

B. Upon completion of work and prior to application for acceptance and final payment, a minimum of three (3) three ring, hard cover binders titled "MAINTENANCE AND OPERATING INSTRUCTIONS FOR THE CEDARWOOD PLAYGROUND IRRIGATION SYSTEM", shall be submitted to the Owner's Representative office. After review and approval, the copies will be forwarded to the Owner. Included in the Maintenance and Operating binders shall be:

1. Table of Contents
2. Written description of Irrigation System.
3. System drawings:
    a. One (1) copy of the original irrigation plan;
    b. One (1) copy of the Record Drawing;
    c. One (1) reproducible of the Record Drawing;

d. One (1) copy of the controller valve system wiring diagram

4. Listing of Manufacturers.
5. Manufacturers' data where multiple model, type and size listings are included; clearly and conspicuously indicating those that are pertinent to this installation.
   a. "APPROVED" submittals of all irrigation equipment.
   b. Operation.
   c. Maintenance: including complete troubleshooting charts.
   d. Parts list.
   e. Names, addresses and telephone numbers of recommended repair and service companies. A copy of the suggested "System Operating Schedule" which shall call out the controller program required (zone run time in minutes per day and days per week) in order to provide the desired amount of water to each area under ''no-rain'' conditions.
6. Winterization and spring start-up procedures.
7. Guarantee data.

1.13 PROCEDURE

A. Notify all city departments and/or public utility owners concerned, of the time and location of any work that may affect them. Cooperate and coordinate with them in the protection and/or repairs of any utilities.

B. Provide and install temporary support, adequate protection and maintenance of all structures, drains, sewers, and other obstructions encountered. Where grade or alignment is obstructed, the obstruction shall be permanently supported, relocated, removed or reconstructed as directed by the Architect.

PART 2 - PRODUCTS

2.01 GENERAL

A. All materials to be incorporated in this system shall be new and without flaws or defects and of quality and performance as specified and meeting the requirements of the system. All material overages at the completion of the installation are the property of the Contractor and shall be removed from the site.

B. No material substitutions from the irrigation products described in these specifications and shown on the drawings shall be made without prior approval and acceptance from the Owner's Representative.

2.02 PE IRRIGATION PIPE

A. Irrigation pipes shall be polyethylene (PE3408) pipe, SIDR 15, Class 100, Type III, Grade 3, Class C conforming to ASTM P2239, with a minimum pressure rating of 100 psi as manufactured by Oil Creek or equal. Polyethylene pipe shall only be used in landscape areas.

2.03 POLYETHYLENE IRRIGATION FITTINGS

A. Fillings for polyethylene pipe shall be insert PVC or Nylon type fittings. Fittings shall conform to NSF standards and be attached with two (2) dog-eared stainless steel clamps. Clamps shall be as manufactured by Oetiker or approved equal.

B. Supply only pipes and fittings that are marked by the manufacturer with the appropriate ASTM designations and pressure ratings and are free from cracks, wrinkles, blisters, dents or other damage. Fittings shall be per ASTM P2609 as manufactured by Dura, Lasco or approved equal.

2.04 PVC PIPE FOR SLEEVES

A. All pipe shall bear the following markings: Manufacturer's name, nominal pipe size, schedule or class, pressure rating in psi, and date of extrusion.

B. All PVC Schedule 80 pipe shall be manufactured from a Type I, Grade I Polyvinyl Chloride (PVC) compound with a Cell Classification of 12454 per ASTM D1784. The pipe shall be manufactured in strict compliance to ASTM D1785, consistently meeting and/or exceeding the Quality Assurance test requirements of this standard with regard to material, workmanship, burst pressure, flattening, and extrusion quality. Standard lengths of pipe sizes 6" and larger shall be beveled each end by the pipe manufacturer. All pipe shall be stored indoors after production at the manufacturing site until shipped from factory. This pipe shall carry the National Sanitation Foundation (NSF) seal of approval for potable water applications.

C. Sleeves for PE irrigation pipe shall be two times pipe diameter minimum.

2.05 GEAR DRIVEN SPRINKLERS

A. The sprinkler shall be Hunter Industries Incorporated I-20 gear-driven, rotary type, capable of covering a 17 foot to 46 foot radius at 50 PSI with a discharge rate of 0.36 to 14.8 GPM. The sprinkler shall be available with thirty four (34) nozzles discharging 0.36 GPM to 14.8 GPM. The sprinkler shall have radius adjustment capabilities by means of a stainless-steel nozzle retainer/radius adjustment screw.

B. The sprinkler shall be both full-circle and adjustable part-circle operation in a single unit. The sprinkler shall be minutely adjustable from 50° to 360°. It shall be adjustable in all phases of installation (i.e., before installation, after installation while static, and after installation while in operation). The sprinkler shall be equipped with a self-adjusting stator to ensure constant rotation speed regardless of nozzle installed.

C. The sprinkler shall have a non-strippable drive mechanism that allows the nozzle turret to be turned during operation, without damage. It shall also have an automatic arc return feature that returns the nozzle turret to its proper orientation if it is turned outside its intended arc of coverage.

D. The sprinkler shall be equipped with a drain check valve to prevent low head drainage, and be capable of checking up to 15 feet (4.5 m) in elevation change. The sprinkler shall have a minimum of 4 inch (10.16 cm) pop-up stroke to bring the rotating nozzle turret into a clean environment. The sprinkler shall have a rubber cover firmly attached to the top of the riser. When specified, the sprinkler shall have a cover molded of purple Alcryn rubber to indicate the use of reclaimed water. The rubber cover shall be surrounded by a protective rubber boot when sprinkler is in the retracted position.

E. The sprinkler shall have an exposed surface diameter after installation of 2 inches (5 cm) and have an overall height of 7-7/8 inches (20 cm). The unit shall have a 1-inch Female National Pipe Thread (FNPT) inlet. When specified, the unit shall have a 1-inch Female British Standard Pipe Thread inlet.

F. The sprinkler shall be serviceable after installation by unscrewing the body cap, removing the riser assembly, and extracting the inlet filter screen. The sprinkler shall have an optional turf-cup kit that, once installed, provides the means to grow living turf on top of the sprinkler riser.

G. The body of the sprinkler shall be constructed of corrosion resistant, impact resistant, heavy-duty A.B.S. It shall have a stainless steel riser and spring for positive retraction of the riser when irrigation is complete. The riser and nozzle-turret assembly shall be encased in stainless steel. The sprinkler shall carry a five-year, exchange warranty (not prorated).

2.06 STREAM SPRAY SPRINKLERS

A. The sprinkler shall be Hunter Industries Incorporated Pro-Spray PSR 30 Spray Sprinkler, capable of matched precipitation rate of 8 foot to 17 foot radius at 30 PSI. The sprinkler shall have radius adjustment capabilities, adjustable from 0 degrees to 360 degrees by means of a stainless-steel nozzle retainer/radius adjustment screw.

B. The sprinkler shall be available with a 4-, 6-, or 12-inch (10-, 15-, or 30-cm) pop-up stroke, depending on the body specified, to bring the nozzle into a clean environment. The sprinkler shall be available as an aboveground shrub head. The sprinkler shall have the option of either a factory-installed or field-installed drain check valve capable of checking up to 10 feet (3.0 m) in elevation change. When specified as factory-installed, the sprinkler shall have the words "CHECK VALVE" stamped in white lettering on the body cap. The sprinkler shall have available an optional, snap-on cap, molded in purple alcryn rubber, or a replacement body cap, molded in purple to indicate the use of reclaimed water. A vandal-resistant locking cap shall be available as a field-installed option.

C. The sprinkler shall have a standard pressure-regulating device as an integral part of the pop-up riser. This regulator will prevent fogging or misting of the nozzle spray pattern by maintaining a constant nozzle outlet pressure of 30 PSI with inlet pressures of up to 100 PSI, regardless of the nozzle installed.

D. The body of the sprinkler shall be constructed of corrosion and UV-resistant, heavy-duty A.B.S. The riser of the sprinkler shall be constructed of abrasion and UV-resistant A.B.S. and shall be adjustable for pattern alignment. The riser shall be compatible with female threaded nozzles and shall have a stainless steel spring for positive retraction when irrigation is complete.

E. The sprinkler shall have a pressure-activated, multi-function, UV stable wiper seal that will clean debris from the pop-up stem while it retracts. The seal shall be molded around a rigid plastic ring to prevent seal deformation. This seal shall prevent the sprinkler from sticking in the up position and be capable of sealing the sprinkler riser stem to the sprinkler cap under normal operating pressures. The seal shall be removable from the cap for easy service and shall be replaceable.

F. The sprinkler shall have a factory-installed, removable flush cap with a pull-up tab that shall prevent debris from entering the sprinkler during installation and allow the system to be flushed before installing the nozzle. The flush cap shall have a directional flushing action that allows the water to escape only in one direction. The flush cap shall open as the stem extends and completely close when the stem is in the retracted position.

G. The sprinkler shall have an exposed surface diameter after installation of 2-1/4 inches (6 cm). In addition, the 6-inch (15 cm) and 12-inch (30 cm) sprinklers shall be available with a 1/2-inch FNPT side inlet. When specified with a factory-installed check valve, the 6-inch (15 cm) and 12-inch (30 cm) sprinklers will be supplied without the side inlet.

H. The sprinkler shall carry a five-year, exchange warranty (not prorated).

2.07 ELECTRIC CONTROL VALVES

A. Electric control valves shall be one-inch remote control, diaphragm type, fiberglass or reinforced nylon body plastic valves with manual flow control, manual bleed screw and 200 psi pressure rating.

B. Valves shall be manufactured by Rain Bird model PEB, Hunter Industries model ICV or approved equal.

2.08 VALVE BOXES

A. All valve boxes shall be manufactured from unformed resin with a tensile strength of 3,100-5,500 psi conforming to ASTM P63 8. All boxes shall be green in color. Covers shall be green in color unless otherwise specified.

B. Valve boxes for single valves, isolation valves and quick coupling valves shall be 10-inch round valve boxes with metal detection and bolt down covers.

C. Valve boxes for dual electric valves shall be 12-inch standard valve boxes with metal detection and bolt down covers. When multiple electric valves arc installed in the same area, they are to be installed two (2) valves per box in a 12-inch standard box.

D. Valve box extensions shall be provided and installed as required for proper box depth. Valve box extensions shall be made by the same manufacturer.

E. Valve boxes shall be manufactured by Armor, Carson Specification Grade or approved equal.

2.10 QUICK COUPLING VALVES

A. The valve body shall be of cast brass construction with a working pressure of 125 psi. The valve seat disc plunger body shall be spring loaded so that the valve is normally closed under all conditions when the key is not inserted.

B. The top of the valve body receiving the key shall be equipped with ACME threads and smooth face to allow the key to open and close the valve slowly. The quick coupling valve shall be equipped with a vinyl cover.

C. The valve body construction shall be such that the coupler seal washer may be removed from the top for cleaning or replacement without disassembling any other parts of the valve.

D. Keys shall be ACME with 1-inch male thread and 3/4-inch female thread at the top.

E. Contractor shall provide two (3) keys for quick couplers and two (3) 1-inch x 3/4-inch swivel hose ells.

F. Quick coupling valves, keys and swivels shall be manufactured by Hunter Industries, model HQ-44RC-AW, HK-44 and HS-1 or approved equal.

2.11 AUTOMATIC CONTROL SYSTEM

A. I-CORE Controller:

1. The controller shall be of a modular design with a standard 6-station model. The controller shall be expandable with either 6-station modules or a 48 station decoder output module.

2. The decoder output module shall occupy no more than 3 expansion slots, and may coexist with up to (2) 6-station modules in the plastic enclosure, or (4) 6-station modules in the metal enclosure.

3. The removable station modules shall allow servicing of, and removing of the module(s) without removing field wires from the controller.

4. The controller shall have four independent programs (A, B, C, and D) with 8 start times per program for programs A, B, and C; and 16 start times for program D for a total of up to 40 daily start times. Any two programs shall have the capability of running concurrently. Watering times shall be available from 1 minute to 12 hours in 1-minute increments per station. There shall be a programmable delay between stations available of up to 9 hours. The controller shall have 4 weekly schedule options to choose from: 7-day calendar, 31-day calendar, odd day programming and even day programming. It shall also have a 365-day calendar clock to accommodate true odd-even watering. Operation shall be available in automatic, semi-automatic and manual modes. All programming shall be accomplished by use of a programming dial and selection buttons with user feedback provided by a backlit LCD display. The front panel of the controller shall be removable and capable of being programmed when not attached to the controller cabinet.

5. The controller shall be equipped with a rain sensor on-off switch that allows the user to override a sensor that has suspended watering. The controller shall have a programmable rain delay that turns off the controller for a predetermined period of time, from 1 to 180 days.

6. The controller shall have a cycle and soak scheduling capability by station that allows a cycle to be programmed for up to 60 minutes and a soak period to be programmed for up to 120 minutes.

7. The controller shall have a seasonal adjustment feature with 3 different modes that allows station run times to be altered from 0% to 300% by program to compensate for weather changes. The modes shall include a Global Adjust, Monthly Adjust, and a Solar Sync Adjust. The Global Adjust shall increase the station run times in a given program by a fixed percentage. The Monthly Adjust shall allow all the seasonal adjustment values for the full year to be programmed into the controller, for each program. The Solar Sync Adjust shall allow the seasonal adjustment values to occur on a daily basis when a Hunter Solar sync is connected to the controller.

8. The controller shall be capable of monitoring up to two Clik-type sensors or flow sensors in the plastic configuration, and up to three Clik-type sensors or flow sensors in the metal configuration.

9. The controller shall permit connection of a flow meter which is calibrated by the operator for the pipe diameter in which it is installed. The flow meter shall measure actual flow in gallons or liters. The controller shall have a learning mode in which the controller operates each single station for a short period, learns the actual flow for each station, and stores the information internally by station.

10. When the learned flow is exceeded during normal operations the controller shall record a flow alarm event, cease irrigating the station or stations contributing to the high or low flow readings, and resume irrigation with any

stations which do not cause alarms. The controller shall have the ability to determine high or low flow conditions when multiple stations are operating, and shall perform diagnostics to identify stations which contribute to the problem flow. Allowable limits and duration of incorrect flow shall be preset, but reprogrammable by the operator for unique local conditions. The flow meter shall be a Hunter Industries HFS in an appropriately sized FCT fitting. . It shall also be possible to except certain stations from flow monitoring devices. The controller shall also be equipped with a flow-totalizing function that will provide a running total of all the gallons or liters of water used between two reference dates.

11. Automatic programs shall have user-programmed Non-Water windows to except certain time windows from watering, regardless of the water day schedule.

12. Automatic programs shall also permit the designation of non-water days, even when Odd/Even or Interval Day patterns have been set. Non-water window violations shall be detected and the operator shall be alerted when an irrigation program would have run during a non-water window.

13. The controller shall also save an Easy Retrieve Program which stores all original programming settings. The installing contractor shall be able to restore the system to this saved state at any time after initial installation. The stored Easy Retrieve settings may also be updated at any time by the operator.

14. The controller shall have a one-button manual station advance in Test mode for quick diagnostics checks.

15. The controller shall be equipped with a programmable pump start/master valve circuit that can activate the pump start relay by zone. It shall also have a programmable delay between valve stations. Delays between stations shall be programmable up to a maximum of 10 hours.

16. Transformer input shall be 120/240 VAC, 50/60Hz. Transformer output shall be 24 VAC, 1.5A (40VA). All AC power wiring connections shall be made in an internal junction box. Maximum output per conventional station shall be 24 VAC, 0.56A. Program backup shall be provided by a non-volatile memory circuit that will hold the program information indefinitely. The controller shall have Metal Oxide Varistors (MOVs) on the AC power input portion and the secondary output portion to help protect the micro-circuitry from power surges. The secondary MOVs shall be enclosed in the station modules for easy servicing. There shall be self-diagnostic, electronic short circuit protection that detects a faulty circuit, continues watering the remainder of the program, and reports the faulty station on the display. The diagnostic procedure shall also be capable of being initiated by the user manually. The controller shall provide backup timekeeping in the event of a power outage with the use of an internal long-life lithium battery.

17. The controller shall have a diagnostic feature that provides a visual indication via LED lights that show the current status of sensor activity, station activity and flow activity. Any station or flow alarms shall be report on the LCD display.

18. The controller shall have the option of 3 different enclosures; wall-mounted plastic cabinet, powder coated steel wall-mounted cabinet, and a full plastic pedestal. The steel cabinet shall also be available with a matching pedestal. The pedestal versions shall have the option of a Pedestal Wiring Board (PWB) that allows connection of the field wiring in the pedestal. Additionally, the PWB shall be equipped with MOVs that help protect the secondary output portion of the controller.

19. The controller shall have as an option, the ROAM or ICR remote control package that enables remote operation of the controller. Connection of remotes to the controller shall be provided through factory-installed SmartPort® outlet.

20. The controller shall have a multi-language capability that allows programming of the display in 6 different languages: English, French, Spanish, German, Italian, and Portuguese. It shall also be capable of setting the units of measure to either English (GPM) or Metric (LPM).

21. The controller shall be installed in accordance with the manufacturer's published instructions. The controller shall carry a conditional five year exchange warranty. The automatic controller(s) shall be the IC series controller as manufactured for Hunter Industries Incorporated, San Marcos, California or approved equal.

2.02 I-Core Decoder Specifications:

A. Decoder Output Module:

1. The decoder output module shall include its own user interface dedicated to decoder programming and diagnostics, including a backlit LCD display and navigational buttons. The decoder output module shall fit into 3 of the slots that accommodate conventional station output modules. The decoder output module shall co-exist with conventional station output modules, so that a hybrid system of conventional solenoid wiring and two-wire decoder wiring is possible in the same controller.

2. The decoder output module shall include a Programming Port for field programming of decoder station addresses via the decoder wires. Decoder programming shall not require the use of serial numbers or external devices.

3. The decoder output module shall offer 3 separate two-wire paths to the field. Up to 48 decoder stations may be on any one path, or dispersed over 2 or 3 paths.

4. The decoder output module shall display active stations by number, and shall

also be able to display current draw in milliamps on the two-wire paths at any time, without disruption to running irrigation. The decoder output module shall detect and display Line Open and Line Fault conditions on the two wire path.

5. The decoder output module shall use a current sensing logic to determine whether active stations are drawing sufficient current and shall provide alarm notification when either an underdraw or overdraw situation is detected.

6. The decoder output module shall provide a solenoid finder feature, which chatters a solenoid loudly, for location purposes.

B. Decoders:

1. The decoders shall be completely waterproof. Each decoder shall have a single red and a single blue wire, for connection to the color-coded two-wire path. Each decoder shall include 2 waterproof connectors, UL listed to 600V direct burial, to insure proper connection.

2. The decoders shall be available in a single-station configuration, and a two-station configuration. The individual station outputs shall also be color-coded to insure proper connection.

3. Each decoder station output shall be capable of activating a minimum of 2 typical 24VAC irrigation solenoids. Individual solenoid specifications should be referenced for any difficulties with decoder operations (such as solenoids containing extra components for surge protection).

4. Decoders shall be installed within 100 ft/30 m of the solenoids they are intended to operate. In high lightning areas, the use of webbed wire pairs for decoder-to-solenoid connections is highly recommended.

5. All decoder installations shall be made in appropriately sized valve boxes. At each decoder splice, approximately 5 ft/1.5 m of wire slack shall be provided, looped inside each valve box, to prevent strain on the connection over time.

6. The system shall accommodate up to 48 decoder stations in any combination of single or two-station decoders.

7. All decoder stations shall be compatible with license-free wireless remote control.

C. Surge Protection:

1. Surge suppression devices designed for use with the decoder system shall be installed at a minimum of every 1000 ft/300 m or every 12 decoder modules, whichever is first. A surge suppression module must be installed at the end of each two-wire path.

2. The surge suppression device shall be completely waterproof, and shall include two of each color-coded wire leads, to match the two-wire path.

3. When the surge suppression device is installed in-line, one red/blue pair shall be connected to the wire path on the controller side of the device, and another red/blue pair shall be connected on the field side, continuing the decoder wiring path. When the surge suppression device is installed at the end of the two-wire path, the two red leads shall be joined together with the red wire on the path. The two blue leads shall also be joined together with the blue wire on the two-wire path, so that no leads are left un-terminated.

4. All surge suppression device installations shall be made in appropriately sized valve boxes. At each decoder splice, approximately 5 ft/1.5 m of wire slack shall be provided, looped inside each valve box, to prevent strain on the connection over time.

5. Earth ground hardware shall not be located in the same valve box as the surge suppression devices.

6. Each surge suppression device shall have a single bare copper earth ground lead, for connection to earth grounding hardware. The lead shall be routed at right angles to the two wire path, a minimum of 8 ft/2.5 m away from the two-wire path, and connected to a copper-clad steel ground rod or copper plate of 4"/100 mm width and 36"/1 m length. Nominal resistance of this earth ground connection shall be approximately 10 Ohms or less, and ground-enhancement materials may be required to achieve this.

D. Decoder Wiring:

1. Each two-wire path shall consist of approved decoder cable for this specific system. The wire shall consist of two twisted solid-core copper wires, color-coded red and blue, within a polyethylene jacket for solar and cut protection. Wire conductors shall be 14AWG /2mm2 for distances up to 5000 ft/1500 m, or 12AWG/3.3mm2 for distances up to 7500 ft/2300 m.

2. All splices made within the two-wire path shall be made with UL-listed waterproof connections rated to 600V direct burial with a robust strain relief. All splices in the wire path shall be made in valve boxes, with a minimum of 5 ft/1.5 m slack in each valve box. All decoders and surge suppression devices shall include the minimum number of such connectors in the box from the manufacturer to insure proper connection.

3. The controller shall be of a fixed-station design that is provided and shall have 24 stations. It shall have a UL listed, NEMA 3R rated cabinet for use in the outdoor models. The front panel of the controller shall be removable to allow for remote programming.

2.12 CONTROLLER GROUNDING EQUIPMENT

A. Grounding shall be as shown on the drawings, and as Specified in Section 16100 Electrical Service Systems.

2.13 RAIN SHUT OFF-WIRELESS RAIN-CLICK

A. Rain shut-off shall be plastic in construction with adjustable interruption point and attached mounting bracket. Rain shut-off shall be wireless Rain-Clik as manufactured by Hunter Industries or equal.

B. One rain sensor shall be supplied for each controller. Install the receiver unit next to the irrigation controller, with the transmitter anywhere that the device can receive representative rainfall.

C. Mount unit within 300' from the receiver unit with built in bypass switch on received panel.

D. Sensor Dimensions: 3.25" diameter x 4" high; Wiring: normally closed or normally open; Operational Temperature: 32^0F - 1 30^0F; Receiver Power: 22-28 VAC/VDC, 100 mA (from timer transformer); Switching capabilities: Single Pole Double throw - 24 volts 3 amps.

2.14 WIRE

A. All valve control wire shall be minimum #14-awg, common #12-awg, single strand, solid copper, UL- approved direct burial AWG-U.F. 600V and shall meet all state and local codes for this service. Individual wires must be used for each zone valve. Common wire shall be white in color, control wire shall be red in color. White color shall be used for common wire only.

B. In ground wire connections shall be UL listed, manufactured by 3M, model DBY6 splice kits. All wire splices shall be made in valve boxes, at controller, or at valves.

C. Wire type and method of installation shall be in accordance with local codes for NEC Class II circuits of 30-volt A.C. or less.

2.15 ISOLATION VALVES

A. Isolation valves 2-1/2 inches and smaller in size shall be gate type, of bronze construction, US Manufacture, 200 WOG with steel cross handle and 200 psi rating. Gate valves to be as manufactured by Nibco, model T- 113-K, or approved equal.

2.16 SWING JOINTS

A. Gear driven rotary sprinklers shall be installed on pre-assembled swing joints, minimum length 12 inches, maximum 18 inches.

B. Standard configuration has swivel ells on both ends for maximum versatility.

C. Pressure rated to 150 PSI.

D. Quick coupling valves to be installed on 1-inch prefabricated PVC unitized swing joint assemblies with double 0-ring seals, minimum 315 psi rating and minimum length of 12 inches with brass insert and stabilizer (unless stabilizer is an integral part of the quick coupling valve).

2.17 CRUSHED STONE

A. Crushed stone shall be as specified in Section - 02200 Earthwork. Crushed stone shall be used under valve boxes.

2.18 SAND

A. Sand used for backfilling of trenches; under, around and over PVC lines shall be aas specified in Section 02200 - Earthwork.

2.19 SPARE PARTS

A. Contractor shall supply the following tools and equipment to the Owner's Representative before final observation:

1. Two (2) wrenches for disassembling and adjusting each type of sprinkler head provided.
2. Four (4) quick coupler key assemblies with HS-O Hose Swivel Adaptor.
3. One (1) of each type of gate valve used in the project.
4. Two (2) of each type sprinkler head and pattern (PC & FC) used in the project.
5. Two (2) of each type nozzle used in the project.

B. Before final observation can occur, written evidence that the Owner's Representative has received the tools and equipment must be shown to the Owner.

PART 3 - EXECUTION

3.01 GENERAL

A. Before work is commenced, hold a conference with the Owner's Representative to discuss general details of the work.

B. Examine all contract documents applying to this Section noting any discrepancies and bringing the same to the attention of the Owner's Representative for timely resolution.

C. All work indicated on Drawings shall be provided whether or not specifically mentioned in the Specifications.

D. If there are ambiguities between Drawings and Specifications, and specific interpretation or clarification is not issued prior to bidding, the interpretation or clarification will be made only by Owner's Representative, and Contractor shall comply with the decisions. In the event the installation contradicts the directions given, the installation shall be corrected by Contractor at no additional cost to Owner.

E. Verify dimensions and grades at job site before work is commenced. Do not proceed with installation of the landscape irrigation system when it is apparent that obstructions or grade differences exist or if conflicts in construction details. Legend or specific notes are discovered. All such obstructions, conflicts, or discrepancies shall be brought to the attention of the Owner's Representative.

F. Make all field measurements necessary for the work noting the relationship of the irrigation work to the other trades. Coordinate with other trades (landscaping and other site work trades). Project shall be laid out essentially as indicated on the Irrigation Plans, making minor adjustments for variations in the planting arrangement. Major changes shall be reviewed with the Owner's Representative prior to proceeding.

G. Layout of sprinkler lines indicated on Drawings is diagrammatic only. Location of sprinkler equipment is contingent upon and subject to integration with all other underground utilities. Contractor shall employ all data contained in the Contract Documents and shall verify this information at the construction site to confirm the manner by which it relates to the installation.

H. Coordinate installation of all sprinkler materials, including pipe, to avoid conflict with the trees, shrubs, or other plantings.

I. During progress of work, a competent superintendent and all assistants necessary shall be on site. All shall be satisfactory to the Owner's Representative. The superintendent shall not be changed, except with the consent of the Owner's Representative, unless that person proves unsatisfactory and ceases to be employed. The superintendent shall represent the Contractor in his absence and all directions given to the superintendent shall be as binding as if given to the Contractor.

J. At all times, protect existing irrigation, landscaping, paving, structures, walls, footings, etc. from damage. Any inadvertent damage to the work of another trade shall be reported at once.

K. Replace, or repair to the satisfaction of the Owner, all existing paving disturbed during course of work. New paving shall be the same type, strength, texture, finish, and be equal in every way to removed paving.

3.02 PIPE AND FITTINGS INSTALLATION

A. Using proper width trencher chain, excavate a straight (vertical) and true trench to a depth of 2-inch of pipe invert elevation.

B. Loam or topsoil encountered within the limits of trench excavation for irrigation mains and branch lines shall be carefully removed to the lines and depths as shown on the Drawings and stockpiled for subsequent replacement in the upper 6 inches of the trench from which it is excavated. Such removal and replacement of the quantities of loam shall be considered incidental to the irrigation system and no additional compensation will be allowed therefore.

C. Pipe shall be laid on undisturbed trench bottom provided suitable base is available - no rock larger than 1-inch or sharp edges; if not, excavate to 2-inch below pipe invert and

provide and install sand base or crushed stone upon which to lay pipe.

D. Back filling shall be accomplished as follows: the first 10-inch of backfill material shall contain no foreign matter and no rock larger than 1-inch in diameter. Carefully place material around pipe and wire and tamp in place. Remainder of backfill shall be laid-up in 6-inch (maximum) lifts and tamped to compaction with mechanical equipment. Compact backfill in trenches to dry density equal to the adjacent undisturbed soil, and conform to adjacent grades without dips, sunken area, humps, or other irregularities. Frozen material shall not be used for backfill

E. Do backfilling when pipe is cool. During hot weather cool pipe by operating the system for a short period, or by backfilling in the early part of the morning before the heat of the day.

F. Do not, under any circumstances, use truck wheels for compacting soil.

G. Where feasible, Owner's Representative may authorize the use of flooding in lieu of tamping.

H. Restore grades and repair damage where settling occurs.

I. Make all solvent-weld joints in strict accordance with manufacturer's recommendations, making certain not to apply an excess of primer or solvent, and wiping off excess solvent from each connection. Allow welded joints at least 15 minutes set-up/curing time before moving or handling. When the temperature is above 80° F, allow connections to set minimum 24 hours before pulling or pressure is applied to the system. When temperature is below 80° F, follow manufacturer's recommendations. Provide and install for expansion and contraction as recommended. Wire shall be laid in same trench as mainline and at pipe invert (see Wire Installation).

J. Mainline pipe shall have minimum 18 inches of COVER (excavate to invert as required by pipe size). Lateral pipe shall have minimum 16 inches of COVER for PVC and 12 inches of cover for Polyethylene (excavate to invert as required by pipe size).

K. Cut plastic pipe with handsaw or pipe-cutting tool, removing all burrs at cut ends. All pipe cuts are to be square and true. Bevel cut end as required to conform to Manufacturer's Specifications.

L. Every precaution shall be taken to prevent foreign material from entering the pipe while it is being placed in the trench. At times, when installation of the piping is not in progress, the open end(s) of the pipe shall be closed by a watertight plug or other means. All piping, which cannot temporarily be joined, shall be sealed to make as watertight as possible. This provision shall apply during the lunch hour as well as overnight. Pipe not to be installed that day shall not be laid out. Should water enter the trench during or after installation of the piping, no additional piping may be installed or back filled until all water is removed from the trench. Pipe shall not be installed when water is in the trench, when precipitation is occurring, or when the ambient temperature is at 40° F or below. Pipe installed at temperatures below 40° F shall be removed and replaced at no cost to the Owner. PVC pipe shall be snaked in the trench to accommodate for expansion and contraction due to changes in temperature.

M. In installing irrigation pipe the Contractor shall route the pipe as necessary to prevent damage to tree roots. Where trenching must occur near trees, the Contractor shall provide proper root pruning and sealing methods to all roots 1-inch and larger.

N. Maintain 6-inch minimum clearance between sprinkler lines and lines of other trades. Do not install sprinkler lines directly above another line of any kind.

O. Maintain 1-inch minimum between lines which cross at angles of 45 to 90 degrees.

P. Exercise care when excavating, trenching and working near existing utilities.

Q. Throughout the guarantee period it will be the responsibility of the Contractor to refill any trenches that have settled due to incomplete compaction.

R. Pulling of pipe will be allowed provided soil is suitable and specified depth of bury can be maintained.

3.03 ISOLATION VALVE INSTALLATION

A. Install isolation valves per detail where indicated on the Drawings. Install all isolation valves on a level crushed stone base so that they can be easily opened or closed with the appropriate valve wrench. Install specified valve box over each isolation valve.

B. Check and tighten valve bonnet packing before valve box and backfill installation.

3.04 VALVE BOX INSTALLATION

A. Furnish and install a valve access box for each electric valve, quick coupling valve, isolation valve and wire splice.

B. All valve access boxes shall be installed on a minimum 4-inch crushed stone base. Finish elevation of all boxes shall be at grade. All crushed stone to be supplied by the Contractor and installed before valve box. Crushed stone shall not be poured into previously installed valve boxes.

3.05 24 VOLT CONTROL VALVE INSTALLATION

A. Control valves shall be installed on a level crushed stone base. Grade of bases shall be consistent throughout the project so that finish grades fall within the limits of work. Valves shall be set plumb with adjusting handle and all bolts, screws and wiring accessible through the valve box opening. Valves shall be set in a plumb position with 24-inch minimum maintenance clearance from other equipment.

B. Install at sufficient depth to provide more than 6-inch, nor less than 4-inch cover from top of valve to finish grade.

C. Adjust zone valve operation after installation using flow control device on valve.

3.06 AUTOMATIC CONTROL SYSTEM INSTALLATION

A. Controller Installation:

1. Contractor to install controller in enclosure. Contractor to wire valves into controller and set proper program. Controller to be mounted on panelboard in enclosure.

2. Wire controller to 120-volt electrical supply provided for the controller as indicated on the Drawings.

3. Contractor to install controller in specified enclosure, as shown on the drawings. Contractor to wire valves into controller and set proper program.

4. Keys shall be turned over to the City of Waltham.

B. Control Wiring:

1. Wiring shall be installed along with the main line. Multiple wire bundles shall be cinched together at maximum 12-foot centers using plastic cable cinches and shall be laid beside, and at the same invert as, the irrigation lines. Sufficient slack for expansion and contraction shall be maintained and wiring shall at no point be installed tightly. Provide an additional 8 inches to 12 inches slack at all changes of direction. Wiring in valve boxes shall be a sufficient length to allow the valve solenoid, splice, and all connections to be brought above grade for servicing. This additional slack shall be coiled for neatness in the valve box. Each valve shall have a separate wire back to the controller.

2. Power wire shall be installed in 1000 foot lengths. No splicing shall be allowed on circuits from power source to controller and from controller to controller below 1000 feet of power wire laid. Minimum burial depth shall be 14 inches.

3. Wire shall not be installed directly off the roll. Wire must be first laid out and then installed. Specified depth of burial is to be maintained.

4. All in-ground wire connections shall be waterproofed with 3M DBY-6, DBR-6 or 82-A Scotch Pak splice kits of the appropriate size for the voltage being carried and the wire sizes involved. All splices shall be made in valve boxes (wire runs requiring splices between valve locations shall be provided in splice box--valve box shall be used). Splice locations shall be shown on the Record Drawings.

5. All power wire (1 20v) shall be installed with no in-ground splices. All splices shall be in valve boxes (black covers) or field controllers. Wire splices shall not be in the same valve box with isolation valves and valve covers to be marked “Electrical”.

6. All wire shall be laid in trenches and shall be carefully back-filled to avoid any damage to the wire insulation or wire conductors themselves. In areas of unsuitable material, the trench shall have a 2 inches layer of sand or stone dust on the bottom before the wires are laid into the trench and back-filled. The

wires shall have a minimum of 12 inches of cover. Wire not to be installed that day shall not be laid out.

7. Control wiring located beneath paved areas shall be installed in a separate schedule 80 PVC sleeve.

8. Wiring shall occupy the same trench and shall be installed along the same route as pressure supply or lateral lines wherever possible to the side of pipeline. Control wires shall be laid loosely in trench without stress or stretching to allow for contraction of wires. Where more than one (1) wire is placed in a trench, the wiring shall be taped together at intervals of ten (10) feet.

9. An expansion curl shall be provided within three(3) feet of each wire connection. Expansion curl shall be of sufficient length at each splice connection at each electric control valve, so that in case of repair, the valve bonnet may be brought to the surface without disconnecting the control wires. An expansion curl shall be provided every 100 feet on runs of more than 100 feet in length. Provide looped slack at valves and changes in direction of 90 degrees.

3.07 CONNECTIONS

A. Connect piping to sprinklers, devices, valves, control valves, specialties, and accessories to provide a fully operational irrigation system as part of this work.

B. Connect water supply to irrigation system.

C. Electrical Connections: Connect to power source, controllers, rain sensor, and automatic control valves to provide a fully operational irrigation system as part of this work.

D. Ground systems according to Section 16100 - Electrical Service Improvements.

3.08 CONTROLLER GROUNDING INSTALLATION

A. Ground controller to bare copper ground wire and grounding rods.

3.09 WIRING INSTALLATION

A. Wiring shall be installed along with the main line. Multiple wire bundles shall be cinched together at maximum 12-foot centers using plastic cable cinches and shall be laid beside, and at the same invert as, the irrigation lines. Sufficient slack for expansion and contraction shall be maintained and wiring shall at no point be installed tightly. Provide and install an additional 8 inches to 12 inches slack at all changes of direction. Wiring in valve boxes shall be a sufficient length to allow the valve solenoid, splice, and all connections to be brought above grade for servicing. This additional slack shall be coiled for neatness in the valve box. Each valve shall have a separate wire back to the controller.

B. All wire shall be laid in trenches and shall be carefully back-filled to avoid any damage to the wire insulation or wire conductors themselves. In areas of unsuitable material, the trench shall have a 2 inches layer of sand or stone dust on the bottom before the wires

are laid into the trench and back-filled. The wires shall have a minimum of 12 inches of cover. Wire not to be installed that day shall not be laid out.

C. An expansion curl shall be provided and installed within 6 inches of each wire connection to a solenoid and at least every 100 feet of wire length on runs more than 100 feet in length. Expansion curls can be formed by wrapping five *(5)* turns of wire around a 1-inch diameter or larger pipe and then withdrawing the pipe.

D. Provide and install a common ground wire of white color. No white color shall be used for power wire. Control wire shall be red.

E. Service wiring in connection with Drawings and local codes for 24-volt service. All in-ground wire connections shall be waterproofed with 3M DBY-6 splice kits. All splices shall be made in valve boxes (wire runs requiring splices between valve locations shall be provided and installed in splice box-valve box shall be used). Splice locations shall be shown on the Record Drawings.

F. Contractor shall provide a complete wiring diagram showing wire routing for the connections between the controller and valves. See section one for the inclusion of wiring diagram in operation and maintenance manuals.

3.10 SPRINKLER INSTALLATION

A. Spray sprinklers, small rotary sprinklers and medium rotary sprinklers shall be installed flush (perpendicular) to grade on swing pipe assemblies, minimum length 6 inches, maximum 18 inches.

B. Sprinklers shall not exceed maximum spacing indicated.

C. Adjust sprinkler zone after installation using flow control device on valve.

3.11 QUICK COUPLING VALVE INSTALLATION

A. Provide and install quick coupling valves where indicated on the Drawings.

B. Quick coupling valves to be mounted on 1-inch prefabricated PVC unitized swing joint assemblies with integral o-rings, minimum length 12 inches with brass insert and stabilizer as per details.

3.12 CHECK/TEST/START-UP/ADJUST

A. Flushing:

1. After all piping, valves, sprinkler bodies, pipe lines and risers are in place and connected, but prior to installation of sprinkler internals, open the control valves and flush out the system under a full head of water.

2. Sprinkler internals, flush caps and riser nozzles shall be installed only after flushing of the system has been accomplished to the full satisfaction of the Owner's Representative.

3. Contractor shall be responsible for flushing the entire system after installation is complete and will be responsible for any clogged nozzles for thirty (30) days after substantial completion of this portion of the landscape irrigation system.

B. Testing:

1. Leakage test: test all lines for leaks under operating pressure. Repair all leaks and re-test.

2. Coverage test: perform a coverage test in the presence of the Owner's Representative (notify Architect at least seven (7) days in advance of scheduled coverage test). Representative will determine if the water coverage is complete and adequate. Readjust heads and/or head locations as necessary or directed to achieve proper coverage.

3. All testing shall be at the expense of the Contractor.

3.13 CLEANING AND ADJUSTING

A. At the completion of the work, all parts of the installation shall be thoroughly cleaned. All equipment, pipe, valves and fittings shall be cleaned of grease, metal cuttings and sludge which may have accumulated by the operation of the system for testing.

B. Adjust sprinkler heads, valve boxes, and quick coupling valves to grade as required, so that they will not be damaged by mowing operations.

C. Continue sprinkler coverage adjustment as required by settlement, etc., throughout the guarantee period.

D. Each control zone shall be operated for a minimum of *5* minutes and all heads checked for consistency of delivering water. Adjustments shall be made to sprinklers that are not consistent to the point that they match the manufacturer's standards. All sprinklers, valves, timing devices or other mechanical or electrical components, which fail to meet these standards, shall be rejected, replaced and tested until they meet the manufacturer's standards.

3.14 ACCEPTANCE AND OPERATION BY OWNER

A. Upon completion of the work and acceptance by the Owner, the Contractor shall be responsible for the training of the Owner's Representative(s) in the operation of the system (provide minimum 48 hours written notice in advance of test). The Contractor shall furnish, in addition to the Record Drawings and operational manuals, copies of all available specification sheets and catalog sheets to the Owner's personnel responsible for the operation of the irrigation system. The Contractor shall guarantee all parts and labor for a minimum period of one (1) year from date of acceptance.

B. Conditions for acceptability of work for start of maintenance by Owner issued by Owner or Owner's Representative shall include but not be limited to:

1. Punch list items complete and approved by Owner or Owner's Representative.
2. Landscape irrigation system complete and in place.
3. Record drawings complete.
4. Maintain installation and watering schedules until all conditions noted above have been completed.

3.15 CLEANUP

A. Upon completion of all installation work, Contractor shall remove all leftover materials and equipment from the site in a safe and legal manner.

B. Contractor shall remove all debris resulting from work of this section.

C. Contractor shall regrade, lightly compact, and replant around sprinkler heads where necessary to maintain proper vertical positioning in relation to established grade.

D. Contractor shall fill all depressions and eroded channels with sufficient soil mix to adjust grade to ensure proper drainage. Compact lightly, and replant filled areas in accord with Drawings requirements.

END OF SECTION

SECTION 02815

CONCRETE PADS FOR BIG BELLY KIOSKS

PART 1- GENERAL

1.01 GENERAL PROVISIONS

A. All of the Contract Documents, including the Contract Form, General Provisions, General Conditions, Supplemental Conditions, and all Attachments to the General Provisions, and Division 1 - General Requirements, apply to the work of this Section.

1.02 SCOPE OF WORK

A. Work under this Section shall include all labor, materials, services, equipment, transportation and accessories and the performance of all operations necessary to complete the work of this Section, and as indicated on the Drawings and as specified.

B. The work shall include, but is not limited to, the following:

1. Provision of concrete pads for Big Belly Kiosks.

C. Work not included in the Contract:

1. Furnishing and Installation of Big Belly Kiosks on the concrete pad will be by Others.

1.03 RELATED SECTIONS

A. Section 02200 – Earthwork
B. Section 03300 – Cast-in-Place Concrete

1.04 SUBMITTALS

A. Concrete mix design for concrete pad.

1.05 DELIVERY, STORAGE AND HANDLING

A. Deliver, store, and handle metal fabrication items to prevent damage and deterioration. Store assembled items off the ground.

PART 2 – PRODUCTS

2.01 CONCRETE SLAB FOR INSTALLATIONOF KIOSK

A. Cast-in-place concrete for slab shall conform to the requirements of Section 03300 - Cast-in-place Concrete and shall be 4,000 psi minimum strength at 28 days.

B. Compacted gravel backfill under slab shall conform to the requirements of Section 02200 - Earthwork.

PART 3 – EXECUTION

3.01 GENERAL

A. Provide concrete pad as dimensioned on the drawings. Concrete pad shall be installed level.

B. Finish for pad shall be a broom finish.

END OF SECTION

SECTION 02820

WATER PLAY EQUIPMENT

PART 1 - GENERAL

1.01 GENERAL PROVISIONS

A. Attention is directed to the General Conditions of the Contract, all Divisions of the Specifications and the Contract Drawings, all of which apply to this section.

1.02 SCOPE OF WORK

A. The Owner will furnish the water play features, controller, and below ground equipment vault with wiring harness for connection from controller to individual valves, for installation by the Contractor. See Section 01040 - Control of the Work, Section 1.13 for a description of the Contractor's responsibilities in checking, receiving, storing and coordinating with the manufacturer to receive a complete and satisfactory order.

B. The Contractor shall be responsible for furnishing and installing footings for play features, water piping and wiring, electrical supply equipment including all grounding, and electrical connection between activators and controller.

C. For those items to be supplied by the Owner, the Contractor shall provide any incidental hardware and all footings and other materials not supplied by the manufacturer, but required for installation of these items.

D. All work shall be performed as indicated on the Contract Drawings and Specifications and shall include every aspect of work as obvious or implied and necessary to make the work complete and fully operational.

E. The Contractor shall provide to the City a two year warranty and maintenance, including training of City personnel.

1.03 QUALIFICATIONS

A. The Contractor performing all of the plumbing related work of this Section shall be a Massachusetts Licensed Master Plumber.

B. The Contractor performing all of the electrical related work of this Section shall be a Massachusetts Licensed Electrician.

1.04 RELATED WORK

A. Section 02200 - Earthwork

B. Section 02510 - Bituminous Concrete Paving

C. Section 02667 - Water Service Systems

D. Section 03300 - Cast-in-Place Concrete

1.05 SUBMITTALS

A. Provide manufacturer's information and catalog cuts for the following: Water Play Features, Water regulators, Valves, Valve boxes and Controllers including wiring diagrams.

B. Shop Drawings: Show water play equipment, including plan layout and locations, types, sizes, capacities, and flow characteristics of water play piping components. Include connections to water meters, backflow preventers, valves, piping, accessories, controls, and wiring. Show areas of sprinkler spray and overspray.

C. Coordination Drawings: Indicate interface and spatial relationship between water play elements, water supply, drainage, and electrical connections.

D. Maintenance Data: Include complete maintenance instructions for system.

1.06 QUALITY ASSURANCE

A. Electrical Components, Devices, and Accessories: Listed and labeled as defined in NFPA 70, Article 100, by a testing agency acceptable to authorities having jurisdiction.

B. Comply with ASTM F 645, "Guide for Selection, Design, and Installation of Thermoplastic Water Pressure Piping Systems."

C. Comply with NFPA 70, "National Electrical Code," for electrical connections between wiring and electrically operated devices.

PART 2 - MATERIALS

2.01 GENERAL

A. The water play features and equipment vault with mechanical and electrical equipment and controls to be supplied by the Owner are manufactured by Vortex Aquatic Structures International, Inc., of Montreal, Quebec, Canada (Telephone #1-514-948-0096 or approved equal. Vortex is locally represented by

O'Brien & Sons, Inc. (1-508-359-4200). **The Owner is supplying the vault without the pre-packaged backflow preventer**. A backflow preventer shall be furnished by the Contractor and installed by the Contractor as stipulated in Sections 02667, Water Service Systems and Section 02670, Backflow Preventer Cabinet. The City is supplying the following spray elements:

1.	(1)VOR-611.2008	Bollard Activator
2.	(1)VOR-7214.2008	Watergarden Snake No. 2
3.	(4)VOR-0327	Wave
4.	(3)VOR-0322	Water Bloom No. 1
5.	(3) VOR-301.1000	Ground Geyser
6.	(6)VOR-305.4000	Directional Water Jet
7.	(1)VOR-555.2000	Aquadome No. 1
10.	(1) VOR-1606.3500R05 VCC 6V BFP, PR 2x2" / 50mm with RLC	Equipment Vault **without pre-packaged backflow preventer** (Refer to 02820-3)
11.	(1) VOR-710.6000R01 FT Smartflow 2 Controller, 10 Output (120VAC)	10 Station Vortex Controller to be installed in the Electrical Equipment Enclosure Cabinet

2.02 CONTROLLER

A. The Controller to be supplied by the City and installed by the Contractor is VOR-710.6000 SmartFlow 2.0™ Splashpad Controller.

2.03 COMMAND CENTER

A. General Materials Specifications:

1. Stainless Steel Structural Tubing: Shall be type 304/304L, structurally strong, durable, and resistant to corrosive environments. Rigid centricast fiber reinforced (FRP) and/or molded fiberglass, PVC, filament wound tubing, Galvanized Steel, or Aluminium shall **not** be utilized for any distribution systems manifolds.

2. Bronze: All Backflow devices and Pressure Regulators shall be

manufactured from bronze. Plastics such as PVC, and Nylon shall not be utilized.

3. Painted Finish: Shall be a polyester smooth glossy heat-cured powder coat that is UV and chemical resistant.

B. Mounting and Assembly Hardware: Shall be 304/304L stainless steel. Exposed and accessible hardware shall be tamper resistant, requiring a special tool for removal to deter vandalism and theft.

C. Safety & Craftsmanship: All edges shall be machined to a rounded edge. All welds shall be watertight, buffed smooth, or polished to a non-visible finish and factory pressure tested. Accessibility to the water distribution systems shall be such that no permit for confined spaces would be required as per OSHA Standards.

D. Subterranean Command Center: The Subterranean Command Center shall be a pre-fabricated water distribution system containing piping, valves and electrical wiring. They shall be factory assembled; water pressure tested, and shall be delivered from the Splashpad equipment manufacturers facilities. They shall be equipped with threaded connections for the water inlet and water outlets. The solenoid valves shall be pre-wired to the controller or to a junction box (when the controller is placed in a remote location). The installer shall provide the plumbing equipment required from the water source to the water inlet or backflow device and pressure regulator if so configured. The installer shall provide the plumbing equipment required from the water outlets to the play elements, as well as adequate drainage ball valves at the low point of each of the play element's water distribution lines (if applicable). Should the controller be located remotely, the installer shall supply the electrical equipment required from the junction box to the controller.

E. Subterranean Command Centers: Shall consist of a reinforced frame and access hatch suitable for use in public spaces. The side walls shall be paneled with PVC sheets predrilled for all applicable water line inlets and outlets. The access hatch shall be constructed of 1/8" thick, reinforced; powder coat painted checker plate, and shall be lockable using a standard padlock. For equipment servicing, an integrated corrosion resistant step down pedestal/seat shall be included. All hardware shall be stainless steel.

F. Water Distribution Manifolds: Shall be constructed of 3 ½" outside diameter stainless steel structural tubing with a power coat painted finish. Each water distribution port shall be a 1-1/2" NPT connection. The manifold shall be equipped with a pressure gauge. All welded joints shall be watertight and

pressure tested to 150 psi.

G. Solenoid Valves: There shall be one (1) solenoid valve installed on each of the water distribution ports for the play elements. They shall be a normally closed 24 VAC 50/60 cycle solenoid actuated globe/angle pattern design. The valve pressure rating shall not be less than 150 psi. The valve body and bonnet shall be constructed of PVC with stainless steel fasteners. The valve shall have a manual override capability (manual open/close control). It shall house a fully encapsulated, one-piece solenoid. Each Solenoid valve shall have in integrated flow control adjustment valve stem for fine tuning of spray effects.

H. Piping and Fittings: All piping and fittings shall be schedule 80 CPVC. All factory-assembled components, fittings and connections shall be water pressure tested prior to delivery.

I. Electrical Enclosures, Conduit, Wiring and Connections: All electrical wiring shall be # 16 AWG with a 600V rating. All electrical connections, enclosures, and conduit shall be Nema 4x watertight.

2.04 PIPING MATERIALS

A. CPVC Pipe: Pipe shall be Schedule 80, solvent weld, ASTM No. D-1784 sized as shown on the Drawings and Details as manufactured by Creline or approved equal.

B. Fittings: Fittings for all CPVC piping shall be Schedule 80, solvent weld CPVC as manufactured by Dura, Lasco, or approved equal.

C. Solvent: PVC solvent shall conform to ASTM and be NSF approved. Solvent shall be appropriate for gluing of pipes and fittings up to 6 inches in size. Solvent shall be as manufactured by IPS, Rectorseal, UniWeld, or approved equal and shall be used in conjunction with an appropriate primer.

2.05 CONCRETE

A. Cast-in-place concrete for use in water spray feature foundations and footings shall conform to Section 03300, Cast-in-Place Concrete.

2.06 SAND

A. Sand borrow for pipe bedding shall conform to Section 02200, Earthwork.

2.07 THRUST BLOCKS

A. Concrete thrust blocks shall be installed in locations as indicated on the

Drawings. Installation of thrust blocks shall include furnishing and placing the concrete and any additional excavation as required. Straps in conjunction with thrust blocks shall be furnished and installed where shown on the plans or directed by the Landscape Architect.

PART 3 - EXECUTION

3.01 GENERAL

A. Install manufactured items in strict conformance with the requirements of the manufacturer, the Drawings, and as directed by the Landscape Architect. Where the Drawings and the manufacturer's details differ, the Drawings shall be followed.

3.02 LAYOUT

A. Accurately layout play elements horizontally and vertically such that required finish grades of surrounding paving can be achieved.

3.03 GROUNDING

A. Each play element shall be separately grounded with a UL listed compression cooper grounding lug. Attach to each spray feature in a continuous loop and back to grounding bus.

3.04 PIPE AND FITTINGS

A. The installation and backfilling of pipe, fittings and other related items shall be installed and tested in conformance with the requirements set forth in Section 02667, Water Service Systems. **Pipe shall be set with a minimum cover of 12" above the invert of the pipe.**

B. The installation of the electrical service to the equipment vault shall be performed in conformance with Section 16100, Electric Service Improvements.

C. Pour concrete foundations and footings to the dimensions indicated on the Drawings. Footing and foundation sizes shown on the Drawings shall take precedence over those shown on manufacturer's details.

D. Install manufactured items in strict conformance with the requirements of the manufacturer and as shown on the Drawings. Where a conflict exists between manufacturer's details and detailing on the Drawings, the Drawings shall take precedence.

3.05 FLUSHING OF CPVC SUPPLY LINES

A. **Prior to start up and testing of water spray elements**, remove all spray nozzles from play elements and flush CPVC supply lines to remove sand, CPVC pipe shavings and other debris. Flush until water runs completely clear to prevent nozzles from being plugged with grit.

3.06 TRAINING

A. At Substantial Completion, provide complete operations and maintenance manuals for all water spray components to the City Representative.

3.07 WARRANTY & MAINTENANCE

A. Contractor's Warranty:

1. The working of the water play system shall be fully warrantied by the Contractor against plumbing, mechanical, and electrical defects for a period of one year after the date of Substantial Completion of the project, a period which will include one full season of use. The water play system is defined as water play features, water piping and wiring from the features to the below ground equipment vault, and equipment within the vault. The Warranty shall provide for the cost of labor and materials to repair the system in good working condition. Where defects are covered by the Manufacturer's warranty, the Contractor shall be responsible for obtaining replacements from the manufacture, as well as providing labor or other costs not reimbursed by the manufacturer necessary to restore the system to good working condition.

B. Contractor's Maintenance Period

1. The Contractor shall be responsible for two system start-ups and two system close-downs, over the period of two years.

a. For start-ups and shut-downs, the Contractor shall be solely responsible for performing all required procedures including draining, yearly maintenance recommended by the manufacturer, and any other tasks normally associated with start-up and shut-down.

b. At the Contractor's last shut-down in the second season of operation, the Contractor shall schedule the shut-down to include City Representatives, including a representative from the City of Waltham Water and Sewer Division of the Engineering Department, to whom he will teach shutdown and start-up procedures.

END OF SECTION

SECTION 02825

CHAIN LINK FENCING

PART 1 - GENERAL

1.01 GENERAL PROVISIONS

A. Attention is directed to the General Conditions of the Contract, all Divisions of the Specifications and the Contract Drawings, all of which apply to this section.

B. Examine and coordinate all Contract Drawings and other sections of the specifications for requirements which affect work of this section whether or not such work is specifically mentioned in this section. Coordinate work with other trades to assure the steady progress of all work under the Contract.

1.02 SCOPE OF WORK

A. Work under this Section includes:

1. Furnishing and installing vinyl-clad chain link fence and gates in the heights and locations shown on the drawings.
2. Furnishing and installing vinyl-clad chain link baseball backstop.

1.03 RELATED WORK

A. Section 02100 - Site Preparation and Demolition
B. Section 02200 - Earthwork
C. Section 03300 - Cast-in-Place Concrete

1.04 REFERENCE STANDARDS

A. Comply with standards of the Chain Link Fence Manufacturer’s Institute.

1.05 SUBMITTALS

A. Submit manufacturer's product literature demonstrating compliance with the Specifications.

1.06 DELIVERY, STORAGE AND HANDLING

A. Packaged materials shall be delivered to the site in original, unopened and unaltered containers clearly indicating the manufacture, brand name, lot or serial number and other identifying information.

B. Materials shall be stored in a dry location, off the ground and in such manner as to prevent damage, intrusion of foreign matter and weather. All materials which have become damaged or otherwise unfit for use during delivery or storage shall be replaced at the expense of the Contractor.

C. The Contractor shall be responsible for timing the delivery of items so as to minimize onsite storage time prior to installation. Stored materials and items must be protected from the weather, careless handling and vandalism.

D. Contractor shall handle, pack and transport in a manner to minimize damage to the finish of materials. Upon arrival at the job site, it is the responsibility of the contractor to take equal precautions. Should minor damage occur to the finish the contractor shall restore damaged finishes and test for proper function. Clean and protect work from further damage.

E. Handle and store salvaged chain link fence components in a way to prevent damage and deterioration.

PART 2 - PRODUCTS

2.01 Vinyl Coated Chain Link Fence, Gates & Back-stop

A. Fabric shall meet the following requirements as a minimum:

1. Wire gauge shall be 9 gauge **prior to PVC coating**.

2. Wire finish: Wire shall have a polyvinyl chloride (PVC), plastic resin finish, factory applied over galvanizing prior to fabrication of fabric. Thickness of PVC coating shall be not less than 7 nor more than 20 mils thick. PVC coating shall be applied by the thermal fusion method over a thermoset plastic bonding agent. The bond shall exhibit equal or greater strength than the cohesive strength of the vinyl. All cut ends shall be coated with vinyl at the factory. PVC coated wire shall be capable of being woven into fabric without the PVC coating cracking, crazing, or peeling. Color shall be black.

3. Top and bottom selvages shall be knuckled.

B. Framework (Posts, Rails, and Gate Frame)

1. Steel parts shall be hot-dipped galvanized inside and out prior to vinyl coating.

a) Round pipe shall be Type 1, ASTM F 1083 round cold-formed steel standard weight Schedule 40, Minimum yield strength shall be 25,000 psi. Galvanizing shall conform with ASTM A-120 standard weight Schedule 40 except the hydrostatic testing requirement is waived.

2) Square gate posts and frames shall meet ASTM A500 Grade B with a minimum yield strength of 40,000 psi, sized as indicated.

2. Galvanized steel parts shall be coated with a polyvinyl chloride (PVC) plastic resin finish. PVC coating for framework shall meet the above specifications for fabric coating. Frame color shall match fabric color.

3. Sizes for fence posts, gate frames and other framework members shall be as shown on the Drawings.

   a) Weights for posts shall be as follows:

Outside Diameter (Inches)	Minimum Pounds per Foot Tolerance ±5%
1.66	2.27
2.375	3.65
2.875	5.79
4.00	9.11

4. Provide continuous top rails in manufacturer's longest lengths, with expansion type couplings for each joint. Provide necessary fittings for attaching top rail to each gate, corner, pull and end post.

C. Hardware and accessories: Provide galvanized (ASTM A153) PVC-coated accessories and hardware, with the exception of nuts and bolts. Nuts and bolts shall be galvanized and powder-coated to match fabric color. Coating for all other parts shall meet the above specifications for fabric coating.

1. Post Tops: Galvanized, pressed steel or malleable iron, weather tight closure caps, 1 top for each post. Where top rail is used, provide tops with openings to accommodate top rails. Provide one (1) rounded cap for each end, corner or gate post.

2. Stretcher Bars - One piece lengths with minimum cross section of 3/16" x 3/4". Provide one (1) cross stretcher bar for each end post and two (2) for each corner and pull post.

3. Stretcher Bar Bands - Heavy pressed steel or malleable iron of 1/8" x 3/4" minimum cross section and be of sufficient size to secure stretcher bars to end, corner and pull posts.

4. Rail clamps to be standard clamps (boulevard clamps) furnished complete with fasteners with ASTM Designation A153.

5. Rail brace ends: Formed steel, malleable of cast iron, for connection of rail and brace to posts.

6. Ties - Fabric shall be attached using "Bandit" multi-lock cable ties as furnished by Hin and Coon of Boston, MA (Tel 617-268-1010), or an approved equal. Multi-lock cable ties shall match color of fence fabric.

D. Concrete for footings shall conform to the requirements of Section 03300-Cast-in-Place Concrete. Compressive strength shall be 4,000 psi minimum.

2.02 Chain Link Swing Gates

A. Hinges: Structurally capable of supporting gate leaf and allow opening and closing without binding. Hinge shall permit gate to swing180° inward.

1. Latches for double gates: Provide drop bolt and latch as detailed on the drawings, and padlock keyed into the City's system.

PART 3 - EXECUTION

3.01 GENERAL

A. Install and fasten materials and systems in proper relation with adjacent construction and with uniform appearance. Items shall be installed in a level, plumb condition, true to the lines and grades shown on the Contract Drawings.

3.02 FENCE INSTALLATION

A. Rails - All rails, top, bottom, middle (where required) shall form a continuous brace from end to end of each fence run. Couplings shall be located a maximum of 12" from line posts. All end and corner posts shall be braced to the nearest line post with center brace rails.

B. Fabric - Dimension between finish grade and bottom selvage varies. Refer to drawings. Pull fabric taut and tie to posts and rails.

C. Stretcher Bars - Thread through fabric and secure to posts with tension bands spaced as shown on the Drawings.

D. Tie Wires - Wire shall be spaced as shown on the drawings and securely fastened by twisting around pipe to which attached, clasping and fasten firmly. Bend twisted ends of wire to minimize hazard to persons or clothing.

E. Fasteners - Install nuts for tension band and hardware bolts on side of fence opposite fabric side.

3.03 GUARANTEE

A. The Contractor shall cover the replacement of any damaged items or components, at no extra charge for the period of one year.

END OF SECTION

SECTION 02830

WELDED WIRE FENCE

PART 1 - GENERAL

1.01 Include General Conditions and all other Division 1 – General Requirements as part of the Section.

A. All of the Contract Documents, including the Contract Form, General Provisions, General Conditions, Supplemental Conditions, and all Attachments to the General Provisions, and Division 1 - General Requirements, apply to the work of this Section.

B. Coordinate work with trades affecting, or affected by, work of this Section. Cooperate with such trades to assure the steady progress of all work under the Contract.

C. The contractor shall provide all labor, materials and appurtenances necessary for the complete installation of the industrial steel ornamental fence system as specified.

1.02 WORK INCLUDED

A. Furnish and install welded steel wire fence and gates at play area.
B. Provide lock for gates.

C. Related Work in other Sections:

1. Section 02200 - Earthwork.
2. Section 03300 - Cast-in-Place Concrete.

1.03 QUALITY ASSURANCE

A. The work of this Section shall be completely coordinated with the work of other Sections. Verify dimensions and work of other trades which adjoin materials of the Section before installing items specified.

1.04 SUBMITTALS

A. Product Information: Provide manufacturer's product data and information showing installation and limitations in use. Supply Certificates of Compliance for all materials required for fabrication and installation on all components. Provide color samples of surface finish for approval before fabrication.

B. Shop Drawings:

1. Shop drawings for welded steel wire fence shall show size and thicknesses of all members, types of materials, methods of connection and assembly, complete dimensions, clearances, anchorage, relationship to surrounding work by other trades, shop paint and protective coatings, and other pertinent details of fabrication and installation.

2. Indicate elevation, sections, sizes, connection attachments, reinforcing, anchorage, openings, size and type of fasteners, size of welds, and any accessories.

C. Certificate of Conformance: Provide certificate verifying that each item was prepared, coated, inspected, and repairs made in accordance with this specification.

D. Warranty: Provide warranty that all materials furnished and work executed under this Section comply with Specifications and authorized changes.

E. Structural Certification: Provide written certification that structural requirements meet or exceed specifications included in Article 1.05 Performance Requirements.

1.05 PRODUCT HANDLING AND STORAGE

A. Upon receipt at the job site, all materials shall be checked to ensure that no damage occurred during shipping or handling. Materials shall be stored in such a manner to ensure proper ventilation and drainage and to protect against damage, weather, vandalism and theft.

PART 2 - MATERIALS

2.01 Welded steel wire fence

A. The welded wire fence system shall be Legi R/W fence (OuterSpace Landscape Furnishings, 7533 Draper Ave., La Jolla, CA 92037 858-459-0994) or approved equal.

B.

1. Mesh panels shall be Legi R-S.W.O. Mesh, or equal conforming to the following:

a) Panels for playground perimeter:

1) Panels shall be 4' ht nominal welded steel wire with straight top, with 50 x 200 mm (1.9" x 7.9") rectangular mesh openings, manufactured from 6 mm (.24") o.d. vertical wire, 8 mm (.31") o.d. double horizontal wire as shown on the Drawings.

2. Fence Posts shall be Legi “R” fence post, or equal, conforming to the following:

a) Post shall be rectangular steel tube (2.4" x 1.6") in cross section, with welded top cap (1.6" x 3.5") and 40 mm wide backing plate x the length of the mesh. Interior threaded inserts to receive bolts shall be spaced 7.9" o.c. along back of post.

b) On center post-spacing shall be 2500mm (98.4" or 8.2').

3. Bolts shall be .31" x 1.8" V2A stainless steel security one-way vandal resistant bolts removable only with a special tool.

4. Mesh ends to be overlapped behind post. Bolts to be passed through backing

plate and mesh ends into threaded insrts. Overlapping mesh ends shall be 2.75" wide, which shall allow up to 0.8" tolerance in post spacing. Extra mesh shall be taken up at the corner panels, as shown on the drawings. Corners panels shall be field cut, and finished as shown on the Drawings.

C. Gates, Hinges & Latches

1. Gate shall be Legi “Klassik” double swing gate or approved equal, and as shown on the Drawings.

a) Gate posts shall consist of square tube steel 100 mm square with welded head and foot plates.

b) Gate leafs shall be composed of rectangular tube frames 60 x 40 mm or larger with mesh welded directly the frame.

c) The gate hinges shall have 65 x 40 mm mounting plate, brass washer and hinge pin welded to gate post.

d) Gate hinge plate 260 mm wide (10.2") with oval holes shall allow for a 0.4 inch adjustment of the gate wing.

e) Gates hinges shall be completely contained within the gate profile.

f) A base bolt (locking pin) shall be provided for double wing gates and shall be stored within the frame of the gate leaf and be immovable unless the opposite gate leaf is open.

2. Provide gate without manufacturer’s standard latch.

3. Furnish each gate with one (1) D & D Technologies MagnaLatch and one (1) Gate Stop (Model TCGS3) per gate. In addition, provide Owner with 1 extra Magnalatch and 1 extra Gate Stop per each gate.

4. Field drill gate to install latch and stop.

D. Finish: All material, unless otherwise indicated, shall be hot-dip galvanized after fabrication, with a zinc layer a minimum of 1.8 oz/sq.ft., stainless steel sand-blasted for optimum coating adhesion, and polyester powder-coated in non-lead, UV stable, thermally set powder paints.

1. Fence and gate color shall be chosen by the Owner from manufacturer’s standard color choices.

PART 3 - EXECUTION

3.01 INSTALLATION - GENERAL

A. The installation shall be laid out by the contractor in accordance with the construction documents.

B. Cutting, Fitting, and Placement: Perform cutting, drilling, and fitting required for installing metal fabrications. Set metal fabrications accurately in location, alignment, and elevation; with edges and surfaces level, plumb, true and free of rack; and measured from established lines and levels.

C. Provide temporary bracing or anchors in formwork for items that are to be built or embedded into concrete, masonry or similar construction.

D. Fit exposed connections accurately together to form hairline joints. Do not weld, cut, or abrade surfaces of exterior units that are for bolted or screwed field connections.

3.02 INSTALLATION - WELDED WIRE FENCE

A. Field verify and adjust sections of the work prior to anchoring to ensure matching alignments and stability of members at abutting joints.

B. Install Ornamental Fencing posts plumb. Erect panels plumb true and free from rack and still maintain minimum, maximum, and typical clearances of bottom rail from finish grade. When holding panel true is not possible without exceeding those tolerances, rake assembled panels to approximate finished grade in as long and smooth gradients as possible.

C. Post Footings:

1. Coordinate installation of posts with construction of concrete walls and curbs.

2. When cutting/drilling rails or posts adhere to the following requirements:

a. Remove all metal shavings from cut area.

b. Apply zinc-rich primer to thoroughly cover cut edge and/or drilled hole.

c. Apply 2 coats of custom finish paint matching fence color.

2. Manufacturers spray cans or paint pens shall be used to prime and finish exposed surfaces; it is recommended that paint pens be used to prevent overspray.

3.03 GATE INSTALLATION

A. Install Gate posts and gate leaves plumb. Erect gate posts and leaves plumb true and free from rack and still maintain minimum, maximum, and typical clearances of bottom rail from finish grade.

1. Manufacturer’s gate drawings shall identify all necessary gate hardware required for the complete and proper installation of gates.

2. Gate hardware shall be installed per manufacturer’s recommendations.

3.04 ADJUSTING AND CLEANING

A. Touch-up Painting: Immediately after erection, clean bolted connections and abraded areas per manufacturer's recommendations, and paint exposed areas with the same material (from the same paint lot) as used for shop painting to comply with SSPC-PA 1 and manufacturer's instructions for touching up shop-painted surfaces.

1. Apply by paint pen or spray can to provide a minimum 2.0 mil (0.05mm) dry film thickness.

B. The contractor shall clean the job site of excess materials, and legally dispose of off-site.

END OF SECTION

SECTION 02835

STEEL SERVICE GATE

PART 1- GENERAL

1.01 GENERAL PROVISIONS

A. Attention is directed to the General Conditions of the Contract, all Divisions of the Specifications and the Contract Drawings, all of which apply to this section.

1.02 SCOPE OF WORK

A. Work under this Section shall include all labor, materials, services, equipment, transportation and accessories and the performance of all operations necessary to complete the work of this Section, as indicated on the Contract Drawings and/or as specified herein and includes.

B. The work shall include, but is not limited to, the following:

1. Steel Gate with Post-mounted Lock Box

1.03 RELATED SECTIONS

A. Section 02200 - Earthwork
B. Section 02510 - Bituminous Concrete Paving
C. Section 03300 - Cast-in-Place Concrete

1.04 SUBMITTALS

A. Submit the following in accordance with the requirements of section 01300-SUBMITTALS:

1. Steel gate: Submit complete shop drawings for steel vehicular gate showing details of fabrication and welds.

2. Submit standard paint colors for selection by the Owner.

1.04 DELIVERY, STORAGE AND HANDLING

B. Deliver, store, and handle metal fabrication items to prevent damage and deterioration.

C. Store assembled items off the ground.

1.05 REFERENCE STANDARDS

A. All work shall comply with the minimum standards of the latest editions of the following

codes and specifications, subject to modifications and amendments outlined herein.:

1. American Institute of Steel Construction, (AISC).
2. American Welding Society, (AWS)
3. American Society for Testing and Materials, (ASTM).
4. National Association of Architectural Metal Manufacturers, (NAAMM).

PART 2 - PRODUCTS

2.01 STEEL GATE

A. Steel pipe shall be seamless in conformance with ASTM Designation A53, Schedule 40, Grade A.

B. Steel plate shall conform to ASTM Designation A36.

C. Gate shall be hot-dip galvanized after fabrication. Galvanizing shall comply with ASTM A123, ASTM A 153, or ASTM A386. Provide at least 2 oz./sq. ft. zinc coating.

D. After galvanizing, provide shop applied prime and finish coat as follows:

1. One Coat Primer (dry film thickness 3.0 to 4.0 mils) of Tnemec No. 66 Hi-Build Epoxoline" Epoxy; Porter No. 4361 MCR-43 High Build Epoxy, Dupont "Corlar epoxy primer, or equal.

2. Apply two finish coats (dry film thickness 1.5 to 2.0 mils per coat) as follows: Tnemec No. 74 Endura-Shield IV Acrylic Polyurethane, Porter No. 8731 Hythane Ultra Acrylic Polyurethane, DuPont Imron Polyurethane, or equal.

E. Field touch up damaged or abraded galvanized surfaces with ZRC Cold Galvanizing Compound, PPG Speedhide Galvanized Steel Paint, or Tnemec 90-93 Zinc rich primer or approved equal, and touch up with above finish paint.

F. Key Security Lock Box shall be equal to 1650 Knox Residential Box supplied by the Knox Company, Irvine, CA and of type approved by the Waltham Fire Department.

1. The Contractor will need to apply to Waltham Fire Prevention and complete an application in order to purchase the Knox Box.

2. Lock Box shall be securely shop-welded to lock post of vehicular gate, facing swing post.

PART 3 - EXECUTION

3.01 GENERAL REQUIREMENTS

A. Site improvements shall be fabricated and fastened in accordance with the Drawings and approved Shop Drawings. Site improvements shall be installed in a level, plumb condition, true to the lines and grades shown on plans.

B. Steel fabrication for site improvements shall be accomplished using the highest standards of workmanship. Individual steel pieces to be welded shall be saw cut and carefully fitted together. All connections shall be full welded and ground flush and smooth. All fabricated steel items shall be fine sanded throughout prior to finishing to produce a high standard of surface smoothness. All surfaces and connections shall be without visible grinding marks, surface differentiation or variation.

C. Arc welding procedures shall conform to the current standards of the AWS. All welds shall be as designated on the plans and shall be ground smooth and flush to a neat finish. All welds shall be watertight and care shall be taken to minimize distortion due to heat. Metal shall not be primed, painted or galvanized before welding.

D. The Contractor shall be responsible for timing the delivery of items so as to minimize on-site storage time prior to installation and the Contractor shall handle site improvement materials and products in such a manner as to minimize any damage to the products' finish. Stored materials and items must be protected from weather, careless handling and vandalism. Suitable touch-up material shall be readily available to repair any damage immediately.

E. Shim bolt connections as necessary and secure bolts. Exposed bolts shall be fastened with an approved semi-permanent adhesive to protect against vandalism.

3.02 CONCRETE FOOTINGS

A. Cast-in-place concrete footings for site improvements shall be conform to the requirements of Section 03300 - Cast-in-place concrete and shall be 4,000 psi minimum strength at 28 days.

B. Compacted gravel backfill shall conform to the requirements of Section 02200 - Earthwork.

3.03 STEEL GATE

A. Install gate plumb, with swing arm level, and to layout dimensions shown on the Drawings.

END OF SECTION

SECTION 02845

WOOD GUARDRAIL

PART 1 - GENERAL

1.01 GENERAL PROVISIONS

A. Attention is directed to the General Conditions of the Contract, all Divisions of the Specifications and the Contract Drawings, all of which apply to this section.

B. Examine and coordinate all Contract Drawings and other sections of the specifications for requirements which affect work of this section whether or not such work is specifically mentioned in this section. Coordinate work with other trades to assure the steady progress of all work under the Contract.

1.02 SCOPE OF WORK

A. Work under this Section includes furnishing and installing wood guardrail in the location shown on the Drawings.

1.03 RELATED WORK

A. Section 02100 - Site Preparation and Demolition
B. Section 02200 - Earthwork

1.04 SUBMITTALS

A. Submit shop drawings for wood guardrail, demonstrating compliance with the Specifications.

B. Submit certification of wood type and grade.

1.05 DELIVERY, STORAGE AND HANDLING

A. Materials shall be stored in a dry location, off the ground and in such manner as to prevent damage, intrusion of foreign matter and weather. All materials which have become damaged or otherwise unfit for use during delivery or storage shall be replaced at the expense of the Contractor.

B. The Contractor shall be responsible for timing the delivery of items so as to minimize onsite storage time prior to installation. Stored materials and items must be protected from the weather, careless handling and vandalism.

C. Contractor shall handle, pack and transport in a manner to minimize damage to the finish of materials. Upon arrival at the job site, it is the responsibility of the contractor to take equal precautions. Should minor damage occur to the finish the contractor shall

restore damaged finishes and test for proper function. Clean and protect work from further damage.

PART 2 - PRODUCTS

2.01 Wood Guardrail

A. Wood guardrail shall be a dimensioned as shown on the Drawings.

1. Guardrail shall be constructed of solid pressure treated Southern Yellow Pine, planed to a smooth splinterless surface.

B. All hardware shall be galvanized steel.

C. Top beam of guardrail shall be fabricated to allow racking to smoothly align top rail with finished grade. End of rails shall be cut and angled to fit tightly together at posts.

PART 3 - EXECUTION

3.01 GENERAL

A. Install and fasten materials and systems in proper relation with adjacent construction and with uniform appearance. Items shall be installed in a level, plumb condition, true to the lines and grades shown on the Contract Drawings. Coordinate with work of other sections or trades.

1. Wood guardrail shall be installed to smoothly align with level or sloping finished grade. Posts shall be plumb.

B. Align posts and rails in consistent alignment, plumb and true.

END OF SECTION

SECTION 02850

ATHLETIC EQUIPMENT

PART 1 - GENERAL

1.01 GENERAL PROVISIONS

A. Attention is directed to the General Conditions of the Contract, all Divisions of the Specifications and the Contract Drawings, all of which apply to this section.

1.02 SCOPE OF WORK

A. Furnish and install two (2) basketball standards & goals.
B. Furnish and install tennis net and posts
C. Furnish and install tennis backboards.

1.03 RELATED WORK

A. Section 02540 - Safety Surfacing
B. Section 02590 – Color Coating
C. Section 03300 - Cast-in-Place Concrete

1.04 SUBMITTALS

A. Submit manufacturer's literature demonstrating compliance with the specifications.
B. Submit manufacturer's recommended installation details and instructions.
C. Where applicable, submit standard color choices.

1.05 DELIVERY STORAGE AND HANDLING

A. All materials shall be protected from weather and other damage prior to installation.

PART 2 - MATERIALS

2.01 BASKETBALL STANDARDS, BACKBOARDS, GOALS AND PADDING

A. Basketball standards shall be 6’ offset gooseneck posts manufactured by True Bounce (True Bounce, 56 Conduit St., New Bedford, MA 02745) PG Series Gooseneck, or equal.

1. Post shall be Schedule 40 steel pipe with a 6-layer galvanized finish, sized as shown On the Drawings.

B. Basketball backboards shall be a sound deadening backboard, True Bounce XL7042 or equal.

1. Backboard shall be 42" x 72" constructed of 1/2" thick resistant polycarbonate. Backboard shall have 1/2" hole pattern to allow for sound reduction.

2. The shot box and perimeter shall be striped with enamel paint.

3. Board shall have a heavy duty "E" channeled aluminum with stainless steel fasteners.

4. The lower edge and corners of basketball backboards shall be padded with manufacturer's supplied sports cushioning.

C. Basketball goals shall have regulation size (18" diameter) 5/8" diameter double rim of high tensile steel powder coated orange official size goal, with nylon net, and all required attaching hardware. Rim shall have 7/16" round steel braces, and 12 net-tie net holders.

1. Hardware shall be zinc-galvanized or stainless steel.

2.02 TENNIS BACKBOARDS

A. Tennis backboards shall be Bakko Bak Bord slimline flat series or equal conforming to the following:

1. Panels shall be 1 3/4" thick with interior metal channel.
2. Compartments shall be filled with sound deadening materials.
3. Panel shall be encased in thick fiberglass and UV protective gel coat.
4. Front & Edges of panel shall be sprayed with a high quality impact, solar and temperature resistant green polyurethane Imron paint.
5. Panel faces shall have no holes.

2.03 TENNIS NET AND POSTS

A. Tennis net shall be Douglas Championship Net 30036T or equal meeting the following:

1. Net shall be tapered, vinyl coated polyester, 2 ply.
2. Weight shall be 20 oz/sq. yd.
3. Netting shall be 3.5 mm
4. Break strength: 325 lbs.
5. Net shall have a 5 year warranty.

B. Provide heavy duty 2" wide polyester adjustable center strap.

C. Posts shall be Douglas Premier XS posts or equal conforming to the following:

1. 2-7/8 O.D. round 8 gauge steel.
2. Welded lacing rods
3. Die-cast zinc caps and gear housings
4. Baked on polyester powder coat finish.
5. Jam-free cable tensioning hardware with hardened stainless steel gears.

PART 3 - INSTALLATION

3.01 New Backboards and Goals

A. Install according to manufacturer's directions.

B. Install level and plumb.

3.02 TENNIS BACKBOARDS

A. Install on existing chain link fence posts as shown on the Drawings and in accordance with manufacturer's instructions.

3.03 TENNIS POSTS AND NET

A. Install according to manufacturer's instructions and as shown on the Drawings.

END OF SECTION

SECTION 02860

PLAYGROUND EQUIPMENT

PART 1- GENERAL

1.01 GENERAL PROVISIONS

A. All of the Contract Documents, including the Contract Form, General Provisions, General Conditions, Supplemental Conditions, and all Attachments to the General Provisions, and Division 1 - General Requirements, apply to the work of this Section.

1.02 SCOPE OF WORK

A. The Owner will furnish all play equipment for installation by the Contractor. See Section 01040 - Control of the Work, Section 1.13 for a description of the Contractor's responsibilities in checking, receiving, storing and coordinating with the manufacturer to receive a complete and satisfactory order.

1. For those items to be supplied by the Owner, the Contractor shall provide any incidental hardware and all footings and other materials not supplied by the manufacturer, but required for installation of these items.

B. The work shall include installation of the following play equipment furnished by the Owner.

1. Play Equipment is manufactured by Landscape Structures, and consists of equipment shown on the Drawings and summarized below:

(a) 2-5 year play equipment:

(1) Single post swing with one full bucket seat & one molded seat.

(2) LSI “Wee-saw”

(3) Aged 2-5 year old cluster with 4 decks & transfer steps and square poly roof with Double swirl polyslide, loop arch, curved polyslide, pods climber, pod climbers with handholds, critter canyon climber, match four panel, diver panel & wiggle ladder,

(4) Aged 2-5 Cozy Coaster slide with Weevos main structure, swiggly stix and bongo panel.

(5) Curved Balance Beam

(b) 5-12 yr play equipment:

(1) Single post swing with 2 bays (6 seats) including molded bucket seat and 5 belt swings.

(2) 2 Connected deck structures with skyport climber, 7 post netplex, rush slide, lolliladder, transfer module, pipe barrier with wheel, vertical ascent, recycled peaked roof, slidewinder2, canyon climber, tightrope, seat, sunbeam climber, loop pole, and elevated slide.

(3) 2 Welcome signs

1.03 PLAYGROUND AUDIT

A. At the completion of the work of this section, the Contractor shall arrange and pay for an Audit of the completed playground by a Certified Playground Safety Inspector. Audit shall be a comprehensive evaluation of the playground including compliance and accessibility. Audit shall be based on the current ASTM and CPSG standards for playgrounds. Audit shall contain a listing of each separate piece of equipment.

1.04 FOOTING AND INSTALLATION DETAILS

A. Footing and installation details are included on the Drawings for purposes of bidding. It shall be the Contractor's responsibility to obtain complete installation instructions from the manufacturer. Where the Drawings and Manufacturer's instructions differ, notify the Landscape Architect prior to proceeding.

1.05 RELATED SECTIONS

A. Section 02200 – Earthwork

B. Section 02540 – Safety Surfacing.

C. Section 03300 – Cast-in-Place Concrete

1.06 SUBMITTALS

A. Submit concrete mix, as required under Section 03300 - Cast-in-Place Concrete.

B. Submit manufacturer's installation instructions for each piece of play equipment.

C. The Contractor shall engage the services of the Equipment manufacturers to review the installation and to provide a written statement asserting that the supplied equipment and installation meet manufacturer's standards.

1.07 DELIVERY, STORAGE AND HANDLING

A. Deliver, store and handle metal fabrication items to prevent damage and deterioration. Store assembled items off the ground.

1.08 REFERENCE STANDARDS

A. Materials, layout and installation of play equipment shall comply with the following guidelines and standards:

1. ASTM F 1487 - American Society for Testing Materials Standard Consumer Safety Performance Specification for Playground Equipment for Public Use, latest edition.

2. ASTM F2373-08 - Standard Consumer Safety Performance Specification for Public Use Play Equipment for Children 6 months through 23 months

3. National Bureau of Standards, U.S. Consumer Product Safety Commission (CPSC), Public Playground Safety Handbook, 2008

4. IPEMA - International Play Equipment Manufacturers Association

1.09 QUALITY ASSURANCE

A. Installer Qualifications: An experienced installer who has specialized in installing work similar in material, design, and extent to that indicated for this project and who is acceptable to the manufacturer of playground equipment.

B. Provide the Owner with a two year warranty against failure of the installation.

C. A manufacturer's representative from each different manufacturer shall be engaged to provide on-site checking of the progress and process of installation of their respective equipment. The representative shall supervise the installation and adjustment of the playground equipment to ensure that equipment meets the requirements of CPSC and ASTM F1487.

1.10 COORDINATION

A. Coordinate construction of equipment use zones and fall heights during installation of playground equipment with installation of protective surfacing specified in Section 02540 Playground Surfacing. Sequence work so that protective surfacing can be installed as soon as possible after concrete footings have set.

PART 2 - PRODUCTS

2.01 CONCRETE FOOTINGS

A. Cast-in-place concrete footings for site improvements shall be conform to the requirements of Section 03300 - Cast-in-place Concrete and shall be 4,000 psi minimum strength at 28 days.

B. Compacted gravel backfill and crushed stone shall conform to the requirements of Section 02200 - Earthwork.

2.02 PLAY EQUIPMENT

A. Play equipment furnished by the Owner and to be installed by the Contractor is shown on the Drawings.

PART 3 - INSTALLATION

3.01 General

A. Do not begin installation before final grading required for placing protective surfacing is completed.

B. Comply with manufacturer's written installation instructions, unless more stringent requirements are indicated. Anchor playground equipment securely, positioned at locations and elevations indicated on Shop Drawings.

C. Maximum Equipment Height: Coordinate installed heights of equipment and components with installation of protective surfacing. Set equipment so fall heights and elevation requirements for age group use and accessibility are within required limits. Verify that playground equipment elevations comply with requirements for each type and component of equipment.

D.. The Contractor shall arrange and pay any fees necessary for playground equipment manufacturer’s technical personnel to inspect playground layout and playground equipment during installation and at final completion to certify compliance with ASTM F 1487 and CPSC guidelines.

1. Notify the Landscape Architect 48 hours in advance of date and time of final inspection.

3.02 Verification of Use Zones

A. Contractor shall layout all playground equipment as per the Drawings.

B. The Contractor shall be aware of all clear Use Zones around the play equipment, as indicated on the drawings, and shall ensure that all minimum Use Zones are complied with. Verify locations of playground perimeter.

C. Use Zones are the areas around all play equipment that shall be clear of any obstacles, including, but not limited to, curbs, trees, and fencing. Contractor shall bring to the attention of the Landscape Architect any discrepancies between plans and actual site conditions, where there is a conflict with the required use zone.

1. The Contractor shall notify the Landscape Architect for review of the layout prior to installation of play equipment and pouring of footings.

3.03 FOOTINGS

A. Provide concrete footings dimensioned and spaced as shown on the Drawings, and as required by the play equipment manufacturer. Top of footing shall be flush with and shall not protrude above aggregate base course in order to provide adequate depth of safety surfacing.

B. Post and Footing Excavation: Hand-excavate holes for posts and footings to dimensions, profile, spacing, and in locations indicated on Drawings, in firm, undisturbed or compacted subgrade soil. Level bearing surfaces with drainage fill to required elevation.

C. Post Setting: Set main-frame equipment posts in concrete footing. Protect portion of posts above footing from concrete splatter. Place concrete around posts and vibrate or tamp for consolidation. Verify that posts are set plumb or at the correct angle and are aligned and at the correct height and spacing. Hold posts in position during placement and finishing operations until concrete is sufficiently cured.

1. Concrete Footings: Smooth top, and shape to shed water.

D. Assemble play components according to manufacturer's instructions.

E. Pour concrete footings and let set a minimum of 24 hours before proceeding.

F. Place assembly in footings, block up, plumb and level.

3.05 ADJUSTING

A. Adjust movable playground equipment components to operate smoothly, easily, and quietly, free from binding, warp, distortion, nonalignment, misplacement, disruption, or malfunction, throughout entire operational range.

3.06 CLEANING

A. After completing playground equipment installation, inspect components. Remove spots, dirt, and debris. Repair damaged finishes to match original finish or replace component.

3.07 PLAYGROUND AUDIT

A. At the completion of the work of this Section, pay for and schedule a complete Playground Audit by a Certified Playground Safety Inspector . The audit shall list individual pieces of equipment in the playground. The audit shall be a detailed comprehensive playground safety report, including photographs of any non-compliant areas. Any violations of ASTM 1487-11, current CPSC or ADA regulations, or other playground hazards shall be identified. Final Acceptance shall not be granted until the Contractor's work is certified to be compliant.

END OF SECTION

SECTION 02865

BOCCE COURT

PART 1 - GENERAL

1.01 GENERAL PROVISIONS

A. Attention is directed to the General Conditions of the Contract, all Divisions of the Specifications and the Contract Drawings, all of which apply to this section.

B. Examine and coordinate all Contract Drawings and other section of the specifications for requirements which affect work of this section whether or not such work is specifically mentioned in this section. Coordinate work with other trades to assure the steady progress of all work under the Contract. The Contractor shall refer to the Contract Documents for all new work and coordinate how it relates to the paving.

1.02 SCOPE OF WORK

A. Work under this Section shall include all labor, materials, services, equipment, transportation and accessories and the performance of all operations necessary to complete the work of this Section, as indicated on the Contract Drawings and/or as specified herein.

B. The work shall include, but is not limited to, the following:

1. Furnish and construct a bocce court as shown & detailed on the Drawings with concrete curb, bumper board, and artificial turf surface.

1.03 RELATED WORK

A. Section 02200 – Earthwork

1.04 REFERENCE STANDARDS

A. Work shall comply with the minimum standards of the latest editions of the following codes and specifications, subject to modifications and amendments outlined herein.

1. MHDSS: Standard Specifications: Commonwealth of Massachusetts, Department of Public Works, Standard Specifications for Highways and Bridges, latest edition.
2. ASTM: American Society for Testing and Materials.
3. AASHTO: American Association of State Highway and Transportation Officials.
4. Federal, State and/or Municipal Codes
5. American National Standards Institute
6. ADA: Americans with Disabilities Act

1.05 QUALIFICATIONS

A. Installer: Company specializing in performing the work of this section with documented experience in installing artificial turf.

1.06 SUBMITTALS

A. Product data: Submit manufacturer's product data, including installation instructions.

B. Samples: Submit samples of synthetic grass and infill.

C. Warranty: Submit manufacturer's standard 10 year limited warranty.

D. Color chart for stain.

PART 2 - PRODUCTS

2.01 POURED IN PLACE CONCRETE CURB

A. Curb shall conform to the requirements of Section 3300 – Cast in Place Concrete.
   1. Concrete shall be fiber-reinforced.

2.02 LUMBER

A. Bumper board shall be constructed from 2 x 6 nominal pressure treated #1 Southern Yellow Pine in 12' lengths (possible source: Braintree Lumber 781-843-1300).

   1. Lumber shall be selected for straightness and to minimize knots.

B. Nailer board shall be pressure treated Southern Yellow Pine.

2.03 FILTER FABRIC

A. Filter fabric shall be Mirafi 180N or equal.

2.04 AGGREGATE BASE COURSES

A. Two layer aggregate base: Crushed angular hard stone ¾"=1" minus compatible stone as coarse base. ½" minus compactible stone as leveling base.

2.05 ARTIFICIAL TURF

A. Artificial turf shall be "Tour Greens Bent Grass" as manufactured by Tour Greens (local representative, Joseph Crowley, 781-320-2166) or equal.

   1. Synthetic grass shall consist of fibers that are 1-1/4" long. Turf fiber construction shall consist of polypropylene fibers tufted into a 2-layer stabilized woven polypropylene fabric, with a secondary backing of Duraflo.

a) Face weight: 34 oz./square yard
b) Face Yarn Type: Polypropylene
c) Fiber Mass: 7600 denier
d) Pile Height: 1.25 inches
e) Color: Green
f) Construction: Broadloom tufted
g) Tufting Gauge: 3/8”
h) Primary Backing: Stabilized dual layered woven polypropylene, 7 oz./square yard.
i) Secondary Backing: 10.0 oz DuraFlo scrim with PP adhesive
j) Total Product Weight: 53.7 oz/square yard
k) Finished roll width 180” untrimmed.
l) Warranty: 10 year fade

2. Top Dressing

a) 6.5 lbs/square feet of Round Quartz Sand

b) 1 lb/square foot of Green and Black Top Dressing

3. Splicing material: 1000 denier coated nylon (Cordua or equal) 12” wide premium.

4. Adhesive: Synthetic turf adhesive.

2.06 STAIN

A. Stain for the bumper board shall be an exterior opaque stain, Sherwin Williams “Woodscapes” or approved equal, color to be chosen by the Owner.

PART 3 - EXECUTION

3.01 CONCRETE CURB

A. Construct and finish curb in conformance with Section 03300 – Cast-In-place Concrete.

3.02 NAILER BOARD

A. Secure nailer board to concrete curb as detailed in the Drawings.

3.03 BASE CONSTRUCTION

A. Compact and level subgrade. Place filter fabric on subgrade.

B. Compacted stone base: Place and compact a coarse aggregate base compacted to 90-95% of maximum dry density per AASHTO T99 over the prepared substrate to a compacted depth of 6”. Aggregate size shall be ¾” minus. Compaction for all layers

shall be done with mechanical compactors, including vibratory compactors, and/or powered tampers, and rollers.

C. Leveling Base: Place and compact a 1” fine aggregate base as leveling layer directly over the coarse base. Compact with mechanical compactors.

3.04 SYNTHETIC GRASS

A. Place turf and cut to fit configuration.

B. Nail turf to top of nailer board.

3.05 TOP DRESSING

A. Topdress with rounded quartz sand at specified rate.

B. Topdress top layer with green & black mix at specified rate.

3.06 BUMPER BOARDS

A. Fill any knot holes.

B. Prior to staining, verify that pressure treatment has dried.

C. Provide stained sample for approval.

D. After staining, secure bumper boards to concrete curb as detailed in the Drawings.

1. Provide flush joints.

2. Install boards in 12’ lengths.

3. Recess bolts, and fill bolt holes. Stain filler to match board stain.

END OF SECTION

SECTION 02875

SHADE SHELTERS

PART 1 - GENERAL

1.01 GENERAL PROVISIONS

A. Attention is directed to the General Conditions of the Contract, all Divisions of the Specifications and the Contract Drawings, all of which apply to this Section.

B. Examine and coordinate all Contract Drawings and other section of the specifications for requirements which affect work of this section whether or not such work is specifically mentioned in this section. Coordinate work with other trades to assure the steady progress of all work under the Contract. The Contractor shall refer to the Contract Documents for all new work and coordinate how it relates to this Section.

1.02 SCOPE OF WORK

A. The work shall include, but is not limited to, the following:

1. Furnishing and installing metal and polyethylene fabric shade shelters in the locations shown on the drawings, in accordance with manufacturer's recommendations, and as specified herein.

1.03 RELATED WORK

A. Section 31 00 00 - Earthwork.
B. Section 03 30 00 - Cast-in-Place Concrete.

1.04 SUBMITTALS

A. Submit the following in accordance with the requirements of Part II:
1. Manufacturer's complete shop drawings indicating type, size & gauge of materials, connection details, and layout plan for footings and posts, demonstrating compliance with the Specifications.
2. The metal shade structure manufacturer shall submit structural calculations for the shade structure footings, sealed by a registered engineer in the state of Massachusetts.
3. Shop drawings for steel reinforcement of shade structure footings.
4. Manufacturer's installation instructions.
5. Manufacturer's standard color chart and samples. Manufacturer's drawings indicating type, size & gauge of materials, connection details, and layout plan for footings and posts, demonstrating compliance with the Specifications.
6. Shop drawings for steel reinforcement of shade shelter footings.
7. Manufacturer's installation instructions.
8. Manufacturer's standard color chart and samples.

1.05 QUALITY CONTROL

A. Manufacturer qualifications: Manufacturer shall have a minimum of 5 years experience in the fabrication of tubular steel shade shelters. Manufacturer shall have fabricated similar shelters to that which is specified.

B. Members shall be designed according to the American Institute of Steel Construction (AISC) specifications and the American Iron end Steel Institute (AISA) specifications for cold-formed members.

C. Fabrication welds shall be in strict accordance with the structural welding code of the American Welding Society (AWS) specifications. All structural welds shall be in compliance with the requirements of "Pre-qualified" welded joints. All welding shall conform to ASTM A-233 series E-7OXX electrodes - low hydrogen. Field welding is not allowed.

1.06 DELIVERY, STORAGE AND HANDLING

A. Deliver, store, and handle metal fabrication items to prevent damage and deterioration.

B. Store assembled items off the ground.

1.07 REFERENCE STANDARDS

A. Materials and methods of construction shall comply with the following standards:

1. ASTM A 36/A 36M - Standard Specification for Carbon Structural Steel; 2003a.

2. ASTM A 325 - Standard Specification for Structural Steel Bolts, Heat Treated, 120,000 PSI Minimum Tensile Strength; 2004.

3. ASTM A 307 - Standard Specification for Carbon Steel Bolts and Studs, 60,000 PSI Tensile Strength; 2003a.

4. ASTM A 563 - Standard Specification for Carbon and Alloy Steel Nuts; 2004.

5. ASTM A 500 - Standard Specification for Cold-Formed Welded and Seamless Carbon Steel Structural Tubing in Rounds and Shapes; 2003a.

6. ASTM A 653/A 653M - Standard Specification for Steel Sheet, Zinc-Coated (Galvanized) or Zinc-Iron Alloy-Coated (Galvanealed) by the Hot-Dip Process; 2003.

7. ASTM A 792/A 792M - Standard Specification for Steel Sheet, 55% Aluminum-Zinc Alloy Coated by the Hot-Dip Process; 2003.

8. American Institute of Steel Construction (AISC).

9. American Iron and Steel Institute (AISI) Specifications for Cold Formed Members.

10. American Society of Testing Material (ASTM).

11. American Welding Society (AWS).

12. OSHA Steel Erection Standard 29 CFR 1926.750 Part R.

13. SSPC-SP 2 – Hand Tool Cleaning; Society for Protective Coatings; 2000.

14. SSPC-SP 10 - Near-White Blast Cleaning; Society for Protective Coatings; 2000.

15. ICC Evaluation Service, ESR-1006, Structural Insulated Panels.

1.08 WARRANTY

A. Shade Shelter shall have manufacturer's limited 20 year warranty on upright posts and support structure frames against failure due to rust-through corrosion.

B. Shade shelter manufacturer shall provide a limited 10 year warranty on fabric and fabric stitching thread against degradation, cracking or material breakdown resulting from UV exposure, mold, or mildew, and on fastening devices and cables.

PART 2 - PRODUCTS

2.01 FABRIC SHADE SHELTERS

A. Shade shelter shall be a steel powder-coated frame supported polyethylene fabric shelter as manufactured by Shade Systems represented locally by O'Brien and Sons of Medfield, MA (Tel:508-359-4200) or approved equal.

1. Color of fabric and powder coated frame shall be chosen by the Landscape Architect/Owner from manufacturer's standard color choices.

B. Posts, Structural Frame Tubing and Hardware: All tubing used shall be cold-formed and milled per ASTM-A135 and ASTM A-500. Material testing shall be in accordance with ASTM E-8. Minimum yield shall be 40,000 psi with a minimum tensile strength of 45,000 psi on all posts. All tubing shall be pre-cut to appropriate lengths, and where applicable all outside surfaces shall be galvanized with an interior corrosion-resistant zinc-rich coating. Where required, support pipes shall be schedule 40 hot-dip galvanized or powder-coated black steel. All fastening hardware shall be stainless steel.

1. Tubing members shall be factory-welded by Certified Welders to American Welding Society (AWS) specifications and to the highest standards of quality workmanship. Weldments shall be finished with a zinc-rich galvanized coating.

2. Polyester Powder-Coating Process: Powder coated parts shall be completely cleaned and a hot zinc phosphate pretreatment with non-chromic sealer applied. Powder-coating shall be electrostatically applied and oven-cured at 375 to 425 degrees Fahrenheit. Polyester powders shall meet or exceed ASTM standards for Adhesion, Hardness, Impact, Flexibility, Overbake Resistance, and Salt Spray Resistance.

   a. Color for frame components shall be chosen by the Landscape Architect/Owner from manufacturer's standard color choices.

C. Fastening System:

1. Fastening System to consist of the Turn-N-Slide™ fastening device factory installed at each roof rafter corner, or approved equal fastening system. Fastening system shall distribute fabric tension evenly over rafters and secure the fabric at the proper tautness. A locking cap shall secure the end of each rafter with a vandal-resistant bolt . Fastening system shall allow ease of removal of fabric.

D. Fabric shall be "CoolNet" shade fabric supplied by Shade Systems Inc., or approved equal.

1. Fabric shall be knitted of monofilament and tape construction high density polyethylene with ultra violet stabilizers and flame retardant. UV block factor shall not be less than 91%.

   a. Fabric shall pass the requirements established under the NFPA 701 Test Method 2 test standards for flammability including the accelerated water leaching protocol.

   b. Fabric shall also meet the following criteria:

Nominal thickness	0.057 inches
Fabric Mass	Min. 337 g/m^2
Light Fastness	7-8 (Blue Wool Scale)
Weather Fastness	4-5 (Grey Scale Test)

Tear Resistance	Warp 210N;Weft 276N
Breaking Force	Warp 786N;Weft 1544N
Bursting Pressure	Mean 3125kPa
Bursting Force	Mean 1775N

c. Color of fabric shall be chosen by the Landscape Architect/Owner from manufacturer's standard color choices.

E. Fabric fastening: Fabric shall be attached to frame using a vinyl covered minimum 1/4" diameter galvanized and clear vinyl coated cable. Cable fasteners are zinc-plated copper for maximum corrosion resistance.

1. Fastening system shall be equivalent to the "Turn-N-Slide" fastening system provided by Shade Systems Inc., allowing fast removal of fabric, with sealed rafter and moving sleeve, independent per side, pre-looped and clamped at the factory.

F. Hardware shall be vandal resistant.

2.02 METAL SHADE STRUCTURE

A. Metal Shade Shelter shall be Polygon Ramada Model, 12' x 32' with custom round columns, standing seam roof, lightening protection, and Poli-5000 finish or equal.

B. Roofing nails shall not be visible from the interior of the shelter.

C. Finish color shall be chosen from manufacturer's standard colors.

D. Finish shall conform to the following:

Test Description	Test Method	Poli-5000 Results
Salt Spray Resistance	ASTM B 117/ ASTM D 1654 Method 2 (scraping)	10,000 hours, no creep from scribe line, rating of 10
Humidity	ASTM D2247-02	5,000 hours with no loss of adhesion or blistering
Light UV/ Resistance	ASTM G154-04 2000 hours exposure. Alternate cycles (4 hours UVC and 4 hours condensation)	a) No chalking b) 75% color retention c) Color variation-maximum 3.0 E variation CIE formula (before and after 2,000 hours exposure)
Stain Resistance	ASTM D1308-02e1 24 hours exposure with 10% concentration	No stain from following: Mustard, Tannic Acid, Catsup, Citric Acid, Coffee, Tartaric Acid, Pepsi Cola, Beer, Oleic Acid, Lactic Acid, Orange Juice
Scratch Resistance	Hoffman Scratch Hardness Tester	No substrate appearance with 1,000 gram load
Adhesion	ASTM D3359-02	ASTM Class 4B rating or better
Resistance Impact	ASTM D2794-93	100 in-lbs. w/o cracking
Hardness	ASTM D3363-92a	2H min-no indentation
Flexibility	ASTM D522-93a	1/8" no cracking/loss of adhesion at bend
Abrasion	Taber abraser CS10 Wheel (1,000 mg load)	14 mg. max weight loss per cycle
Solvent Resistance	50+ MEK rubs	Minimal to no dulling or color removal

PART 3 - EXECUTION

3.01 Assembly

A. Carefully lay out footings according to manufacturer's dimensions.

B. Construct steel reinforced footings in accordance with Section 03300 - Cast-in-Place Concrete. Footings shall be 4,000 PSI concrete.

C. Shelter shall be erected in a workman-like manner with framing and fabric installed according to the manufacturer's installation instructions.

1. Care shall be taken to avoid damaging the shelter during installation.

2. Touch-up any damage to finish with manufacturer supplied touch-up paint.

END OF SECTION

SECTION 02891

TRAFFIC SIGNS

PART 1 - GENERAL

1.01 RELATED DOCUMENTS

A. All of the Contract Documents, including the Contract Form, General Provisions, General Conditions, Supplemental Conditions, and all Attachments to the General Provisions, and Division 1 - General Requirements, apply to the work of this Section.

1.02 REQUIREMENTS INCLUDED

A. Provide all equipment and materials, and do all work necessary to complete the installation of exterior signs as indicated on the Drawings and as specified.

B. The work of this Section includes, but is not limited to:

1. Furnishing and installing signage identifying accessible parking spaces.

1.03 RELATED SECTIONS

A. Section 03300 - Cast-in-Place Concrete.B.

1.04 REFERENCE STANDARDS

A. Manual of Uniform Traffic Control Devices (MUTCD), latest edition.

B. Massachusetts Highway Department Standard Specifications for Highways and Bridges, latest edition.

1.05 SUBMITTALS

A. Product Data: Submit manufacturer's product data for the products of this Section. Provide complete product description and specifications, catalog cuts, and other descriptive data indicated compliance with the Specifications.

1.06 DELIVERY, STORAGE, AND HANDLING

B. Deliver materials and products unopened. Store and handle in strict compliance with manufacturer's instructions and recommendations. Store under cover and protect from weather damage.

PART 2 – PRODUCTS

2.01 ALUMINUM SIGNS PARKING SIGNS

A. General: Provide manufacturer's standard extrusions, sections, sheet, and plate, of alloy and temper recommended by aluminum manufacturer or finisher for type, use, and finish indicated, but not less than strength and durability properties specified below:

1. Structural Aluminum Shapes: ASTM B 308, 6061 alloy.

2. Extruded Aluminum Bars, Rods, Shapes, and Tubes: ASTM B 221, 6063 alloy.

3. Aluminum Sheet and Plate: ASTTv1 B 209, alloy 1100, 3003, or 5052.

B. Reflectivity: Aluminum signs shall have high performance Type III reflective sheeting conforming to M9.30.0 of the Massachusetts Highway Department Standard Specifications.

C. Aluminum signs shall be .080 thick flat.

D. Sign supports shall be heavy duty high tensile steel break-away 2 lbs / foot square sign posts.

E. All fastening hardware shall be galvanized.

2.03 MISCELLANEOUS MATERIALS

A. Fasteners: Unless otherwise indicated, use concealed fasteners in all work of this Section. Fabricate fasteners from metals that are non-corrosive to sign surface materials and mounting substrates.

1. Fasteners shall be roundhead or countersunk, and tamperproof.

2. Spacers and washers shall be neoprene.

PART 3 - EXECUTION

3.01 GENERAL

A. Locate sign units and accessories where shown and scheduled. Use mounting methods indicated.

B. Erect work square, plumb and true, accurately fitted, and with tight joints and intersections.

3.02 SIGN INSTALLATION

A. General Installation Requirements: Strictly comply with manufacturer's instructions and recommendations, except where more restrictive requirements are specified in this section.

B. Installation: Install units plumb, level, in alignment and plane without warp or rack. Anchor securely in place.

C. Install signs on breakaway post as detailed in the Drawings.

D. Touch-up damaged coatings and finishes.

3.03 TOLERANCES

C. The following allowable installed tolerances are allowable variations from locations and dimensions indicated by the Contract Documents. Do not add these tolerances to any allowable tolerances indicated for other work.

1. Allowable Variation from True Plumb: ± 1/8 in. in 10 ft. - 0 in.
2. Allowable Variation from True Line: ± 1/8 in. in 10 ft. - 0 in.
3. Allowable Variation from True Level: ± 1/16 in. in 10 ft. - 0 in.

END OF SECTION

SECTION 02901

PLANTING SOILS

PART 1 - GENERAL

1.01 RELATED DOCUMENTS

A. All of the Contract Documents, including the Contract Form, General Provisions, General Conditions, Supplemental Conditions, and all Attachments to the General Provisions, and Division 1 - General Requirements, apply to the work of this Section.

B. Examine all Contract Documents and all other Sections of the Specifications for requirements therein affecting the work of this trade.

1.02 SUMMARY

A. The work of this Section consists of providing all equipment and materials and performing all work necessary to supply, test, place, and amend planting soils as indicated on the Drawings and as recommended by the loam soils analysis.

1. Provide loam testing to demonstrate compliance with the Specifications and provide recommendations for fertilizer and soil amendments for specific species on the Plant List.

2. Supply loam as necessary to provide the required depth of topsoil and planting backfill volume. Topsoil stockpiled during site preparation operations may be utilized if it is unadulterated with subsoil, meets the Specifications for loam, and is screened. Supply additional off-site loam as necessary to provide the required volume of loam.

3. Refer to Sections 02902 Fertilizers & Amendments and Section 02925 Lawns & Native Grasses for specification of and incorporation of fertilizers & amendments. Refer to Section 02950 for specific planting mix backfill requirements.

4. Refer to Section 02901 for placing of loam for seeded areas.

1.03 RELATED WORK UNDER OTHER SECTIONS

A. The following items of related work are specified and included in other Sections of the Specifications:

1. Section 02100 - Site Preparation
2. Section 02200 - Earthwork
3. Section 02902 - Fertilizers & Amendments
4. Section 02925 - Lawns & Native Grasses

5. Section 02950 - Planting.

1.04 TESTING

A. The Contractor shall supply testing results for proposed loam source as follows:

1. Comprehensive mechanical sieve analysis of soil to determine USDA classification, determination of pH, soil organic matter, exchangeable acidity, Modified Morgan extractable nutrients (P, K, Ca, Mg, Fe, Mn, Zn, Cu, B, S), lead (Pb), and aluminum (Al), cation exchange capacity, and base saturation. , as well as crop specific lime and nutrient recommendations.

2. Testing shall also include recommendations by the testing lab for specific lime and nutrient recommendations for the lawns, and specific trees and shrubs listed on the planting plan. Should these recommendations differ from those required by the Specifications, the Contractor shall adjust amendments to match recommendations.

1.05 REFERENCES

A. Commonwealth of Massachusetts Highway Department (MHD): Standard Specifications for Highways and Bridges

B. USDA Soil Conservation Service Soil Classification System.

1.06 SUBMITTALS

A. Submit test results for loam.

C. Submit recommended rates and type of Nitrogen and Phosphorus fertilizers recommended by the soils testing agency for lawn areas, roses, and deciduous trees and shrubs.

PART 2 - PRODUCTS

2.01 LOAM BORROW

A. Loam shall be a sandy loam or loam soil determined by mechanical analysis based on the USDA Soil Conservation Service Soil classification system. It shall be of uniform composition with no admixture of subsoil.

B. Prior to amendment, loam shall have an acidity range of pH 6.0 to pH 6.8 and shall contain not less than 4% nor more than 20% organic matter.

C. Loam shall be screened to be free of stones greater than 3/4" diameter, lumps, plants, and their roots, debris and other extraneous matter over 3/4" in diameter, or excess quantities of smaller pieces of such material. It shall not contain toxic substances

harmful to plant growth.

2.02 STORAGE AND PROTECTION

A. Loam stockpiles shall be protected from erosion at all times. Off-site loam shall be spread immediately, or if scheduling requires that material is stock-piled on site for more than 24 hours, stockpiles shall be covered with tarpaulin or other soil erosion acceptable to the Owner's Representative and the Waltham Conservation Commission.

B. No loam shall be stock-piled within 50 feet of a wetland.

C. No loam borrow shall be handled in any way if it is wet or frozen.

END OF SECTION

SECTION 02902

FERTILIZERS & AMENDMENTS

PART 1 - GENERAL

1.01 SUMMARY

A. The Contractor shall provide all labor, materials, equipment and services necessary for, and incidental to, preparation of ground surfaces, fertilizing, liming, seeding, mulching, and maintenance of seeded areas as shown on the Drawings or as specified herein.

1.02 RELATED SECTIONS

A. Section 02200 - Earthwork
B. Section 02900 – Lawns & Native Grasses
C. Section 02901 - Planting Soils
D. Section 02950 - Planting

1.03 SUBMITTALS

A. Submit manufacturer's certification and/or literature for the following:

1. Fertilizers
2. Soil Amendments

1.04 DELIVERY, STORAGE, AND HANDLING

A. Deliver fertilizer materials in original unopened containers, showing weight, analysis, and name of manufacturer. Store in a manner to prevent wetting and deterioration.

B. Deliver packaged materials in containers showing weight, analysis and name of manufacturer. Protect materials from deterioration during delivery, and while stored at the site.

1.05 FERTILIZER BEST MANAGEMENT PRACTICES

A. Phosphate fertilizers shall not be used without testing soils and obtaining recommendations from testing agencies stating the need for and quantity of phosphate to be applied for grass areas based on the soils test result.

B. Fertilizer shall not be applied outside the growing season, defined as April 15th to October 31st. No late season fertilization is allowed.

C. No fertilizer shall be applied during rainfall or before prediction of rain.

D. Do not allow fertilizer to spill onto pavements or hard surfaces. Fertilizer inadvertently applied to impervious surfaces shall be swept or blown back into the target area or returned to its original container.

PART 2 - PRODUCTS

2.01 MATERIALS

A. Fertilizer for seeding or sodding:

1. Starter Fertilizer: The phosphate content of the starter fertilizer shall be based on recommendations by the Soils Testing Laboratory for the specific application of establishing new turf.

2. At least 50% of the nitrogen in the fertilizer shall be a slow release form of nitrogen, such as a polymer-coated time-release nitrogen Polyon 50% 20-10-10 (local distributor Harrell's Turf Specialties, 508-832-5008) or equal

3. Maintenance Fertilizer, if required, shall be a non-phosphate fertilizer with at least 80% of the nitrogen as controlled release polymer coated nitrogen, as manufactured by Polyon or equal.

B. Soil Additives

1. Acidulant for adjustment of loam borrow pH shall be commercial grade flours of sulfite, ferrous sulfate, or aluminum sulfate that are unadulterated. Acidulants shall be delivered in unopened containers with the name of the manufacturer, material, analysis and net weight appearing on each container.

2. Ground limestone for adjustment of loam borrow pH shall contain not less than eighty five percent (85%) of total carbonates and shall be ground to such fineness that forty percent (40%) will pass through 100 mesh sieve and ninety five percent (95%) will pass through a 20 mesh sieve. Contractor shall be aware of loam borrow pH and the amount of lime needed to adjust pH to specification in accordance with testing lab recommendations.

3. Peat moss shall he composed of the partly decomposed sterns and leaves of any of several species of sphagnum moss. It shall be free from wood, decomposed colloidal residue and other foreign matter. It shall have an acidity range cf 3.3 pH to 5.5 pH as determined in accordance with the methods of testing of A.O.A.C., latest edition. Its water absorbing ability shall be a minimum of 1,100% by weight on an oven-dry basis.

4. Gypsum ($CaSO4-2H2O$) shall be agricultural grade, granular form.

5. Phosphorus shall be superphosphate or triple superphosphate.

6. Potassium shall be sulfate of potash, $K2S04$.

END OF SECTION

SECTION 02925

LAWNS & NATIVE GRASSES

PART 1 - GENERAL

1 .01 RELATED DOCUMENTS

A. All of the Contract Documents, including the Contract Form, General Provisions, General Conditions, Supplemental Conditions, and all Attachments to the General Provisions, and Division 1 - General Requirements, apply to the work of this Section

1 .02 REQUIREMENTS INCLUDED

A. Provide all equipment and materials, and do all work necessary to complete the final grading of root zone mix, application of soil amendments and fertilizers, sodding; and maintenance of sodded lawn areas as indicated on the Drawings and as specified. The work shall include, but is not limited to, the following:

1. Placing of loam

2. Incorporation of fertilizer & amendments into spread and compacted loam

3. Hydroseeding native grass mixes. Limit of grading and earthwork shall be limit of seeding unless otherwise indicated on the Contract Documents. All lawn areas disturbed outside the limit of seeding shall be prepared and seeded as specified herein at no additional cost to the Owner.

4. Sodding with one year guarantee

5. Maintenance of seeded and sodded areas from substantial completion of the project thru a 60 day establishment period, or until final acceptance of entire project, whichever is longer.
6. The new irrigation system shall be utilized for watering during the establishment and maintenance period of lawns. The amount of water utilized during the establishment period shall be metered and the Contractor shall reimburse the City for the cost. The anticipated cost of the water shall be included in the Bid price.

1 .03 RELATED WORK

A. Examine Contract Documents for requirements which affect the work of this Section. Other specification sections which directly relate to the work of this Section include, but are not limited to:

1. Section 02100 - Site Preparation
2. Section 02200 - Earthwork
3. Section 02810 - Irrigation System
4. Section 02901 - Planting Soils: Loam testing
5. Section 02902 - Fertilizers & Amendments

1 .04 QUALIFICATIONS

A. Installer of lawns and native grass area shall have had experience successfully installing at least 3 projects of similar size within the last 5 years.

1 .05 REFERENCES

A. American Sod Producers Associations (ASPA), Specifications for Turfgrass Sod Materials and Transplanting/Installing.

1 .06 SUBMITTALS

A. At least 30 days prior to intended use, the Contractor shall provide the following samples and submittals for approval. Do not order materials until Owner's Representative's approval of samples, certifications or test results has been obtained. Delivered materials shall closely match the approved samples. Acceptance shall not constitute final acceptance. The Owner's Representative reserves the right to reject on or after delivery any material that does not meet these Specifications.

1. Material Sampling and Testing of Loam Borrow from on-site and off-site sources shall be as specified under Section 02901 - Planting Topsoil.

2. Seed: Submit a manufacturer's Certificate of Compliance to the Specifications with each shipment of each type of seed. These certificates shall include the guaranteed percentages of purity, weed content and germination of the seed, and also the net weight and date of shipment. No seed may he sown until the Contractor has submitted the certificates.

3. Hydroseeding: Prior to the start of hydroseeding, submit a certified statement for approval as to the number of pounds of materials to be used per 100 gallons of water. Submit proposed process to be used.

4. Hydroseeding Mulch: Submit 4 copies of manufacturer's literature and one material sample.

5. Sod:

a) Do not order sod until final approval is given by the Landscape Architect, based on the following information to be submitted by the Contractor:

b) Certification of grass seed mix for sod, identify sod source, including names and telephone number of supplier.

c) Two (2) samples of sod, 3' long x 18"wide.

1 .07 DEFINITIONS

A. Weeds shall include but not be necessarily limited to the following: Dandelion, Jimsonweed, Quackgrass, Morning Glory, Rush Grass, Mustard, Lambs quarter, Chickweed, Cress, Crabgrass, Canadian Thistle, Nutgrass, Poison Oak, Bermuda Grass, Johnson Grass, Poison Ivy, Nutsedge,

Nimble Will, Bindweed, Bent Grass, Wild Garlic, Perennial Sorrel, and Brome Grass.

1 .08 DELIVERY, STORAGE AND HANDLING

A. Store seed in a manner to prevent wetting and deterioration.

B. Harvest, store and handle sod according to the requirements of the American Sod Producers Association (ASPA), “Specifications for Turfgrass Sod Materials and Transplanting/Installing”

PART 2 - PRODUCTS

2 .01 MATERIALS

A. SEED

1. Seed mixture shall be fresh, clean, new crop seed. Grass shall be of the previous years crop. The weed seed content shall not exceed 0.01% by weight. The seed shall be furnished and delivered in the proportion specified below in new, clean, sealed and properly labeled containers. All seed shall comply with State and Federal seed laws. Seed that has become wet, moldy or otherwise damaged shall not be acceptable.

2. Seed Mixture #1 shall be Mowable Moist Native Mix A as supplied by Ernst Conservation seed, or equal. Mix shall be as follows, seeded at 7 lb/1000 SF:

% of Mix by Weight	Botanical Name	Common Name
5.0	Agrostis perennans	Autumn Bentgrass
50.7	Festuca rubra	Creeping Red Fescue
8.0	Lolium multiflorum	Annual Ryegrass
36.3	Poa palustris	Fowl Bluegrass

3. Non-mowble Seed Mix #2 for bio-detention basin bottom and sides shall be Ernst Conservation Seeds “Native Detention Area Mix - ERNMX-183"(1-800-873-3321) or equal with the following percentages and species. Seed at 1 lb/1000 square feet.

Proportion by Weight	Botanical Name	Common Name
28%	Panicum clandestinum “Tioga”	Deertongue
24%	Carex vulpinoidea, PA Ecotype	Fox Sedge
20%	Elymus virginicus, PA Ecotype	Virginia Wildrye
20%	Panicum virgatum “Shawnee”	Switchgrass
4%	Agrostis perennans, PA Ecotype	Autumn Bentgrass
3%	Juncus tenuis, PA Ecotype	Path Rush
1%	Juncus effusus	Soft Rush

B. SOD

1. Sod shall be nursery grown on agricultural land cultivated specifically for sod; free of objectionable grassy or broadleaf weeds (less than five such plants per 100 square feet); cut at a uniform minimum thickness of 3/4" inch (excluding top growth and thatch) at time of cutting; individual pieces cut to supplier's standard width and length with maximum allowable deviation of five percent; composed of grass mixtures recommended by the New England Sod Producers Association, as follows.

2. Sod shall have the following percentages of named grass species and named varieties. Possible source: Down East Turf Farms (1-800-634-0090):

   32% Jumpstart Kentucky Bluegrass
   32% Midnight Kentucky Bluegrass
   16% Ridgeline Kentucky Bluegrass
   10% Fairmount Chewings Fescue
   10% Charismatic II Perennial Ryegrass

3. Sod with broken pad and torn or uneven edges will not be acceptable.

4. Sod shall be harvested in big rolls equal to 250 square feet per roll, 4'-0" in width and 62'-6" in length for sodding the athletic field surface. Small rolls measuring 1'-6" in width shall only be used for detail and cut in work around existing site features and for repair work as required, unless large areas of repair are required which warrant the use of 4'-0" big rolls. Use of 1'-6" wide rolls shall be kept to a minimum.

2 .02 FERTILIZERS, LIMESTONE & AMENDMENTS

A. As required by the loam testing results of Section 02901 - Planting Soils and as specified in Section 02902 - Fertilizer and Amendments.

2 .03 WOOD FIBER MULCH

A. Mulch to cover hydroseeded areas shall be 100% wood fiber mulch processed from whole wood chips manufactured specifically for standard hydraulic mulching equipment.

B. The mulch shall be of such character that the fiber will be dispersed into a uniform slurry when mixed with water. It shall be nontoxic to plant life or animal life.

C. Mulch shall contain a non-petroleum based organic tackifier and a green dye to allow for easy visual metering during application but shall be non-injurious to plant growth.

2 .04 WATER

A. Water shall be supplied through use of the new irrigation system. Water use shall be metered and paid for by the Contractor.

PART 3 - EXECUTION

3 .01 EXAMINATION

A. Examine areas to receive lawns and grass for compliance with requirements and for conditions affecting performance of work of this Section. Do not proceed with installation until unsatisfactory conditions have been corrected.

3 .02 PREPARATION

A. Protect structures, utilities, sidewalks, pavements, and other facilities, trees, shrubs, and plantings from damage caused by seeding operations.

B. Protect adjacent and adjoining areas from hydroseed overspray.

C. Provide erosion-control measures to prevent erosion or displacement of soils and discharge of soil-bearing water runoff or airborne dust to adjacent properties and walkways.

3 .03 PLANTING SOIL PREPARATION

A. Limit subgrade preparation to areas that will be planted in the immediate future.

B. Scarify subgrade to a minimum depth of 6 inches prior to spreading planting soil mix. Remove stones larger than 3/4 inch in any dimension, sticks, roots, rubbish, and other deleterious material.

C. Mix soil amendments with loam at rates recommended by the testing agency. Either mix soil before spreading or apply soil amendments on surface of spread loam and mix thoroughly into top 6 inches of loam by harrowing or tilling before planting.

   1. Mix lime or other soil amendments with dry soil by harrowing or tilling prior to applying fertilizer

D. Spread planting soil mixture to depth required to meet thickness, grades, and elevations shown. Do not spread if planting soil or subgrade is frozen or wet.

E. Install loam in lifts, not to exceed 6" prior to compaction.

F. Compact each lift of loam sufficiently to reduce settling but not enough to prevent the movement of water and feeder roots through the soil. The loam borrow in each lift should feel firm to the foot in all areas and make only slight heel prints. At completionof the loam borrow installation, the soil should offer a firm, even resistance when a soil sampling tube is inserted from lift to lift.

G. Loam compaction shall be achieved with a 100 lb roller or other equipment to provide a firm seed bed of approximately 85% compaction.

H. Select equipment and otherwise phase the installation of the loam borrow to ensure that wheeled equipment does not travel over subsoil, placed fills, or ordinary borrow or already installed soil.

I. Preparation of Unchanged Grades: Where lawns are to be planted in areas unaltered or

undisturbed by excavating, grading, or surface soil stripping operations, prepare soil as follows:

1. Cut and remove and dispose of existing grasses, vegetation, and turf. Do not turn over into soil being prepared for lawns.

2. Till surface soil to a depth of at least 8 inches to a homogenous mixture of fine texture. Apply required soil amendments and mix thoroughly into top 6 inches of soil by harrowing or tilling. Trim high areas and fill in depressions.

3. Clean surface soil of roots, plants, sod, stones, clay lumps, and other extraneous materials harmful to plant growth.

4. Remove waste material, including grass, vegetation, and turf, and legally dispose of it off the Owner's property.

J. Grade lawn and grass areas to a smooth, even surface with loose, uniformly fine texture. Roll and rake, remove ridges, and fill depressions to meet finish grades. Limit fine grading to areas that can be planted in the immediate future. Remove trash, debris, stones larger than 3/4 inch in any dimension, and other objects that may interfere with planting or maintenance operations.

K. At the completion of fine grading, and before seeding, apply initial fertilization as recommended by the soil testing agency at specified rates.

L. Moisten prepared lawn areas before planting when soil is dry. Water thoroughly and allow surface to dry before planting. Do not create muddy soil.

M. Restore prepared areas if eroded or otherwise disturbed after fine grading and before planting.

N. Confirm that the final grade of loam borrow is at the proper finish grade elevations. Adjust the grade as required to meet the contours and spot elevations noted on the Plans. Request the Owner’s representative to inspect the final grade prior to proceeding with seeding.

3 .04 SCHEDULE FOR SEEDING OR SODDING

A. Contractor shall obtain Owner’s Representative’s written approval of fine grading and bed preparation before proceeding with seeding or sodding operations.

B. Do not begin seeding or sodding until the irrigation system is fully functional.

C. The season for seeding shall he from April 1 to June 1 and from August 15 to October 15. The actual planting of seed shall be done, however, only during periods within this season that are normal for such work as determined by weather conditions and by accepted practice in this locality. To prevent loss of soil via water and wind erosion and to prevent the flow of sediment, fertilizer, and pesticides onto roadways, sidewalks, and into catch basins, seed loam areas within 5 days of spreading the loam.

1. If detention basin native grasses are not seeded in the Spring, the Landscape Architect will make no-cost adjustment of species in mix.

3 .05 HYDROSEEDING

A. Do not hydroseed if rain is forecast to occur before completion of hydroseeding and straw mulching can be completed. If practicable, hydroseed after rain when soil is moist.

B. Perform seeding within 20 minutes after mixing seed and water. In no case should seed be left in the tank for longer than 1 hour.

C. When seeding native grasses, use mechanical paddle agitating equipment. Centrifugal pumps are more damaging to native grasses.

D. Seed only when the bed is in a friable condition, not muddy or hard.

3 .06 HYDROSEED PROCESS

A. Hydroseeding shall be a two-step process.

1. Step one shall consist of spreading 100 percent of the required seed with water uniformly over the prepared loam bed so that the seed comes into direct contact with the soil. To mark the progress of the hydroseeding operation the Contractor may add 10 percent of the wood fiber mulch to the slurry.

2. Step two shall consist of a separate application of wood fiber mulch immediately following the first step of hydroseeding noted above. Apply the wood fiber mulch at a rate of 2,000 pounds per acre. If hydroseeding occurs in hot weather, provide 3,000 pounds per acre.

3 .07 MAINTENANCE

A. Maintenance shall begin immediately after any area is seeded and shall continue for a minimum sixty (60) day active growing period or until Final Acceptance, whichever is longer, following the completion of all lawn construction work, and until final acceptance of the project. In the event that seeding operations are completed too late in the Fall for adequate germination and growth of grass, then maintenance shall continue into the following Spring for 60 days minimum in the Spring.

B. Maintenance shall include re-seeding, mowing, watering, weeding, fertilizing a minimum of two times in addition to the fertilizer incorporated by harrowing into the spread loam, and resetting and straightening of protective barriers. Lawn work maintenance shall also include chemical treatments as required for fungus and/or pest control.

C. During the maintenance period, any decline in the condition of seeded areas shall require immediate action to identify potential problems and to undertake corrective measures.

D. Watering shall be done in a manner that will provide uniform coverage, prevent erosion due to application of excessive quantities over small areas, and prevent damage to the finished surface by the watering equipment.

E. Protection:

1. Lawn areas shall be protected at a minimum by a barrier of plastic safety fencing.

2. Barriers shall be placed immediately after lawn construction and shall be maintained until Acceptance.

F. After the grass in seeded areas has germinated, reseed all areas and parts of areas that fail to show a uniform stand of grass. Reseed such areas and parts of areas repeatedly until all areas are covered with a satisfactory growth of grass with no less than 20 grass shoots per square inch and 2,880 grass shoots per square foot. Reseeding together with necessary grading, fertilizing, and trimming shall be done at the Contractor's expense.

G. Mowing and Edging:

1. The Contractor shall keep all lawn areas mowed until Acceptance of the contract by cutting to a height of 2 inches when growth reaches 3 inches.

2. At each mowing, all edges of walks, drives, plant beds and other border conditions shall be edge trimmed by hand or machine to produce straight and uniform edge conditions.

3. On paved areas, remove clippings and debris generated by each mowing, and legally dispose of off-site. Do not remove grass clipping from lawn areas.

4. Do not mow grass when wet.

H. Fertilizing Seeded and Sodded Areas: The first application of fertilizer for seeded areas shall be as specified Section 02901 - Planting Soil. A second application of fertilizer shall be applied to seeded and overseeded areas at the time of the first mowing. This second application shall be applied at a rate that ensures that one-half pound of nitrogen is applied per 1,000 square feet. For seeded areas phosphorus and potassium shall be applied proportionally in accordance with the recommendations of the soil tests and the quantities previously integrated into the soil during the first application. For overseeded areas phosphorus and potassium shall be applied proportionally in accordance with and in the quantities recommended of the soil tests for on-site loam. This second application shall correspond to the following application rates dependent upon the month of application.

1. May 1-15: Apply 1.0 pound of nitrogen per 1,000 square feet.
2. June 15-30: Apply 1.0 pound of nitrogen per 1,000 square feet.
3. August 15 through September 15: Apply 1.0 pound of nitrogen per 1,000 square feet.
4. November 1-15: Apply 1.5 pounds of nitrogen per 1,000 square feet.

I. Nitrogen fertilizer shall be composed of 50 percent slowly soluble or slow release nitrogen fertilizer.

J. Applying Limestone: Should the Contractor be required to return in the Spring due to inadequate germination and growth of grass, as specified in this Specification Section 02945 - Seeded Lawns, the Contractor shall at the beginning of the next seeding or sodding season and spread limestone across all lawn areas installed under this Contract. Limestone shall he spread at rates determined by the soil tests as specified in Section 32 91 10 – Planting Topsoil.

3 .08 ACCEPTANCE

A. Following the minimum required maintenance periods for lawn construction, the Contractor shall request the Owner's Representative in writing for a formal inspection of the completed work. Request for inspection shall be received by the Owner's Representative at least 10 Days before anticipated date of inspection.

B. Acceptance Requirements

1. At the end of the maintenance period, seeded areas shall have a close stand of grass as defined above substantially free of weeds, disease free, and with no bare spots greater than 3 inches in diameter over greater than 5 percent of the overall seeded area. At least 90 percent of the grass established shall be permanent grass species. If seeded areas are deficient, the Contractor's responsibility for maintenance of all seeded areas shall be extended until deficiencies are corrected. Seeded areas to be corrected shall be prepared and reseeded in accordance with the requirements of this Section.

2. At the time of acceptance, the Contractor shall remove temporary barriers used to protect lawn areas.

3 .09 CLEAN UP

A. Absolutely no debris may be left on the site. Excavated material shall be removed as directed. Repair any damage to site or structures to restore them to their original condition, as directed by the Owner's Representative, at no additional cost to the Owner.

END OF SECTION

SECTION 02950

PLANTING

PART I - GENERAL

1.01 RELATED DOCUMENTS

A. All of the Contract Documents, including the Contract Form, General Provisions, General Conditions, Supplemental Conditions, and all Attachments to the General Provisions, and Division 1 - General Requirements, apply to the work of this Section.

B. Examine all Contract Documents and all other Sections of the Specifications for requirements therein affecting the work of this trade.

1.02 REQUIREMENTS INCLUDED

A. The work of this Section consists of providing all labor, equipment, materials, incidental work, and construction methods necessary to perform all planting work and related items as indicated on the Drawings and as specified.

B. The work shall include, but is not limited to, the following:

1. Planting trees and shrubs.
2. Mulching planting beds.
3. Planting maintenance.
4. One year guarantee period for trees and shrubs.

1.03 RELATED WORK UNDER OTHER SECTIONS

A. The following items of related work are specified and included in other Sections of the Specifications:

1. Section 02901 - Planting Soils
2. Section 02902 - Fertilizers

1.04 REFERENCES

A. The following standards shall apply to the work of this Section.

1. MHD Standard Specifications: Massachusetts Highway Department Standard Specifications for Highways and Bridges, 1988 Edition.
2. Hortus III, 1976, L. H. Bailey Hortorium.
3. American National Standards Institute (ANSI):
   Z60.1 American Standard for Nursery Stock,, latest edition, published by American Association of Nurserymen, (AAN).

1.05 SUBMITTALS

A. Submit proof of landscape contractor's experience to the Owner's Representative in accordance with Quality Assurance paragraph of this Section 02950 - Planting.

B. Submit to the Owner's Representative representative samples, certifications, manufacturer's product data and certified test results for materials specified below. Materials shall not be ordered or delivered until the required submittals have been reviewed and approved by the Owner's Representative. Delivered materials shall closely match the approved samples. Approval shall not constitute final acceptance. The Owner's Representative reserves the right to reject, on or after delivery, any material which does not meet these Specifications.

C. Material Sampling and Testing:

1. Material Sampling and Testing of Loam Borrow from Off-Site Sources shall he as specified in Section 02901 - Planting Soils.

2. Planting Mulch: Submit a one cubic foot sample.

3. Antidesiccant: Submit manufacturer's product data.

4. Peat: Submit manufacturer's product data.

5. Mycorrhizal Fungal Inoculant:

a. Submit manufacturer's product data certifying that inoculant being supplied conforms to these Specifications.

. 6. Soil Additives: Submit manufacturer's product data for all soil additives needed to amend a specific soil in order to meet the requirements of this Section 02950 - Planting.

1.06 EXAMINATION OF CONDITIONS

A. All areas to he planted shall be inspected by the Contractor before starting work and any defects such as incorrect grading or inadequate drainage shall he reported to the Owner's Representative prior to beginning this work.

B. The Contractor shall be solely responsible for judging the full extent of work requirements involved, including but not limited to the potential need for storing and maintaining plants temporarily and/or rehandling plants prior to final installation.

C. Protection of plants is the full responsibility of the Contractor between the time of digging at the nursery and final acceptance.

1.07 QUALITY ASSURANCE

A. The Contractor shall locate plant material sources and ensure that plants are shipped in timely fashion for installation. No substitutions are allowed without the written permission of the Landscape Architect.

B. Qualification of Landscape Contractor: The work of this Section 02950 - Planting, shall he performed by a landscape contracting firm which has successfully installed work of a similar quality, schedule requirement, and construction detailing with a minimum of five years experience.

C. Qualification of Foreman or Crew Leader: All work of unloading, stockpiling, storing, transporting on-site - Planting, staking and guying, fertilizing, and maintenance of trees, shrubs, vines, groundcover, and perennials shall be supervised by a foreman or crew leader who is a certified landscape professional or a certified horticulturist.

1. Landscape professional shall mean a Massachusetts Certified Landscape Professional certified by the Associated Landscape Contractors of Massachusetts.
2. Horticulturist means a Massachusetts Certified Horticulturist as certified by the Massachusetts Nursery and Landscape Association.
3. Certification shall be current. Proof of certification shall be submitted per Submittals paragraph of this Section 02950 - Planting.

D. Qualification of Arborist: All work of pruning shall be performed by an arborist certified by the Massachusetts Arborist Association or the International Society of Arboriculture.

PART 2 - PRODUCTS

2.01 LOAM BORROW

A. Loam borrow for planting backfill shall he as specified in Section 02901 - Planting Soils, of this Specification.

2.02 SOIL ADDITIVES

A. Soil additives shall be as specified in Section 02901 - Planting Soils, of this Specification.

2.03 FERTILIZERS

A. Fertilizer shall be as specified in Section 02902 - Fertilizers.

2.04 PLANT MATERIAL INSPECTION

A. At least one month prior to the expected planting date, the Contractor shall request that the Owner's Representative provide a representative to select and tag stock to he

planted under this Section 02950 - Planting.

B. Plants to be inspected shall be in locations and conditions that allow direct and unobscured inspection by the Owner's Representative. Container grown or balled and burlapped shrubs shall be pulled from holding blocks by the nurseryman for scrutiny by the Owner's Representative at no additional cost to the Owner. Harvested trees held in storage shall not have branches tied up. Harvested trees shall not have trunks obscured by burlap, cardboard trunk protection, or other devices that would otherwise obscure inspection. In the event that branches are tied up, trunks are obscured by burlap or cardboard trunk protection, or root flares hidden by burlap and twine and the Owner's Representative cannot inspect root flares, trunks or branching habit, the Contractor shall bear all responsibility and costs associated with tree rejection at a later date during the course of the Contract.

C. Inspection and approval of plants at the source shall not impair the right of subsequent inspection and rejection upon delivery to the site, or during the progress of the work if the Owner's Representative finds that plants do not meet the requirements of the Plant List or this Contract, have declined noticeably due to handling abuse, lack of maintenance, or other causes. Cost of replacements, as required, shall be borne by the Contractor.

2.05 GRADES AND STANDARDS OF PLANTS

A. The Contractor shall furnish all plants shown on the Contract Documents, as specified, and in quantities listed on the Plant List. No substitutions will be permitted, without written approval by the Owner's Representative. All plants shall be nursery grown unless specifically authorized to he collected as noted on the Plant List.

B. All plants shall be typical of their species or variety and shall have a normal habit of growth and be legibly tagged with the proper name. Only plant stock grown within Hardiness Zones 1 through 6b, as established by the USDA Plant Hardiness Zone Map, latest edition, will be accepted.

C. Plants shall be in accordance with ASNI Standards of the American Association of Nurserymen except as noted in this Section - Planting. Botanical plant names shall be in accordance with plant designations included in Hortus III.

D. All deciduous trees shall meet the following standards:

1. Trees shall have a single, straight trunk, well formed, and sturdy. No part of the trunk shall be conspicuously crooked as compared with normal trees of the same variety.

2. All pruning wounds shall show vigorous bark on all edges at the time of harvest. Pruning scars within the crown of any tree shall be clean cut and shall leave no protrusion beyond the branch collar.

3. Trees shall be free from signs of pest and disease damage. The trunk shall be free from sun scald, frost cracks, and wounds resulting from abrasions, fire, animal damage, or other causes.

4. All trees shall have healthy, vigorous leaves or needles of normal size, color, shape, and texture for the particular species and variety.

5. Unless otherwise indicated on the Plant List, the height and spread of deciduous shade trees shall be the minimum requirements.

6. Take caliper measurements for deciduous trees 6 inches above ground level up to and including 4 inches caliper size and 12 inches above ground for larger sizes.

7. No deciduous tree shall be pruned after the Owner's Representative has tagged the plant in the nursery except as directed by the Owner's Representative.

8. Unless otherwise noted on the Plant List, the height to the first branch shall be not less than 6.5 from finish grade to comply with ADA requirements.

2.06 ROOT SYSTEMS

A. Each plant shall have an extensive, symmetrically balanced fibrous root system. Any root ball which shows signs of asymmetry, girdling, injury, or damage to the root system shall he rejected. All parts of the fibrous root system of all plants shall be moist and fresh with a white color when washed of soil. When the plant is removed from the container, the visible root mass shall be healthy with white root tips. The root systems of all plants shall he free of disease, insect pests, eggs, or larvae.

B. Minimum root ball diameters and depths shall he in accordance with ANSI standards.

C. No plants shall be loose in the container.

D. Curling or spiraling of the roots along the walls of rigid containers will not be accepted. Curling, spiraling or girdling roots within balled and burlapped material will not be accepted. Container grown plants which have roots growing out of the container will be rejected.

2.07 MYCORRHIZAL FUNGAL INOCULANT

A. Mycorrhizal fungal inoculant shall be live spores packaged in plastic packets. At minimum each packet of inoculant shall contain the following:

1. Live spores of VA Endomycorrhizal fungi: Vesicular-Arbuscular mycorrihizae fungi, minimum of 8 species.

2. Live spores of Ectomycorrhizal fungi: including ***Pisolithus tinctorius***.

B. Mycorrhizal fungal inoculant shall be manufactured by Plant Health Care Incorporated, 440 William Pitt Way, Pittsburgh, PA 15238, telephone, (800) 421-9051; Horticultunral Alliance, 2946 Louise Street, Sarasota, FL 34237, (800) 628-6373; BioPlex Organics, 2213 Huber Drive, Manheim, PA 17545 (800) 441-3573, or approved equal.

2.08 PLANTING BACKFILL MIX

A. Planting soil mix shall he an approved loam borrow as specified in Section 02910 - Planting Soils, of this Specification and that has been pH adjusted according to particular planting applications and improved through the addition of organic matter as recommended by testing results for the particular species being planted.

1. Planting mix for rose shrub beds shall be 1/3 sand, 1/3 amended loam and 1/3 peat moss, thoroughly mixed and compacted to 85% maximum dry density.

2.09 MULCH

A. Mulch shall be aged pine-bark mulch meeting the Specifications of the MHD Standard specifications for Aged Pine Bark Mulch, M6.04.5.

2.10 WATER

A. The Contractor shall provide labor and water required to establish plants. During the maintenance period the Contractor shall water as required to insure that soil moisture is maintained to a depth of six inches or greater at all times.

2. Watering shall be done in a manner that will provide uniform coverage, prevent erosion due to application of excessive quantities over small areas, and prevent damage to the finished surface by the watering equipment. The Contractor shall furnish sufficient watering equipment to maintain required water levels in the soil.

PART 3- EXECUTION

3.01 PLANTING - GENERAL

A. Furnishing and planting of plant material shall include, but is not limited to placing of weed barrier, digging of planting pits, furnishing the plants as specified as well as the labor of planting, fertilizing, and maintenance.

1. Loam for planting beds is placed and amended under Section 02901 - Planting soils.

B. Tree Planting

1. Contractor shall locate all existing underground utilities that are within 10 feet of the proposed planting pits and notify the Owner's Representative of any conflicts prior to digging plant pits.

2. It shall be the Contractor's option to place the weed barrier before or after tree planting.

C. Seasons for Planting:

1. Deciduous Plants - March 15 to May 15; October 10 to December 15
2. Evergreen Plants - September 1 to November 15; March 15 to May 1

D. Notify the Owner's Representative three working days prior to the proposed arrival of plant material on the site. Plants delivered to the site and not planted within 24 hours of delivery shall have their root balls covered with mulch and shall be watered on a daily basis such that root balls are kept moist throughout.

3.02 PLANTING OF TREES

A. Locations for trees shall be staked on the ground by the Contractor for approval by the Owner's Representative before any plant pits are dug. Notify the Owner's Representative no less than 3 days prior to desired date of inspection of staking to schedule site visit.

1. Circular plant pits shall not be required provided that the minimum dimension between the edge of the pit and the face of the rootball is not less than required by this Section 02950 - Planting.

2. All plant pits dug with a machine shall have the sides of the holes scraped with hand shovels to prevent glazing on compaction of the sides of the hole. Remove and stockpile excavated loam for reuse as backfill for plant pit. All subsoil excavated from the bottoms of planting pits shall be removed from the site.

3. Plant pits shall be dug to the dimensions shown on the Contract Documents.

4. Remove all soil from around the root flare of the stem of the plant and from the top of the rootball to determine the true depth of the rootball. Plants that have been planted such that root flares are buried will be rejected.

5. Plant rootballs must be damp and thoroughly protected from sun and wind from the beginning of the digging operation, during transportation, and at the site until the final planting.

6. Trees shall be placed in the center of plant pits, plumb, with the crown of their roots exposed and located above the surrounding finish grade.

7. Prior to completion of planting installations, remove rope and cut wire baskets from the top 1/3 of the root balls. Pull burlap away from the trunk or stem of the plant and cut burlap from the top 1/3 of the root balls.

8. Planting soil shall he backfilled with approved planting soil to the full depth of the planting pit. Eliminate air pockets and compact the soil by flooding the tree pit within 2 hours of planting installation. After water has drained from the planting pit and planting backfill has dried enough additional planting soil shall be spread in pit or bed to bring the finished surface of the planting pit or bed to grades shown on the Contract Documents. A saucer shall he formed around each plant at a depth of 3 inches for trees.

9. All trees shall be inoculated with mycorrhizal fungi. Inoculant shall be added after the trees have been placed in their holes. Open the required number of packets for each plant and thoroughly mix the inoculant powder into the upper 10 inches (250 mm) of backfill soil.

   a. The application rates for mycorrhizal fungal packets shall be in accordance with the manufacturers recommendations.

B. Contractor shall keep trees plumb and upright at all times.

C. Pruning:

1. As directed by the Owner's Representative, each plant shall be pruned in accordance with the workmanship requirements of "Pruning Standards" for Class I, fine pruning, to preserve the natural character of the plant.

2. Tree pruning, as required, shall be undertaken to the full height of affected trees.

3. All dead wood or suckers and all broken or badly bruised branches shall he removed. Never cut a leader.

D. In the event that rock or underground construction work or obstructions are encountered in any plant pit or bed excavation work, alternate locations will he selected by the Owner's Representative. Relocation of plant pits or beds shall be provided at no additional cost to the Owner. Provide the Owner's Representative with no less than 48 hours notice of obstruction so that a site visit can be scheduled to establish new locations for plants.

E. Absolutely no debris may be left on the site. Repair any damage to site as directed by the Owner's Representative, at no additional cost..

3.03 MULCH

A. Provide 3" of mulch continuous on planting beds.

3.04 WATERING

A. Plants shall be watered immediately following planting as necessary to thoroughly moisten rootball and plant pit loam and thereafter shall be inspected frequently for watering needs and watered, as required, to provide adequate moisture in the planting pit. The Contractor shall inspect tree pits 24 hours after initial watering to confirm that they are draining properly. If surface water or excessively saturated plant pit soils exist the Contractor shall immediately notify the Owner's Representative. The Owner's Representative will recommend remedial measures based upon site conditions.

3.05 MAINTENANCE

A. Maintenance shall begin immediately after each plant is planted and shall continue for a minimum 30-day period, and afterwards as necessary to ensure establishment through the one-year guarantee period.

B. Maintenance shall consist of keeping the plants in a healthy growing condition and shall include but is not limited to watering, weeding, cultivating, pruning, re-mulching, tightening and repairing of guys, straightening of trees to a plumb position, removal of dead material, resetting plants to proper grades or upright position, and maintaining the planting saucer.

1. Plants shall he inspected for watering needs at least twice each week and watered to promote plant growth and vitality.

2. For trees in lawn or mulched beds, apply water to the ground surface directly under the canopy. Water shall he applied at a sufficiently slow rate to prevent run off from the soil surface but great enough to equal 0.2 inches of water per square foot of canopy area per hour for 5 hours per week.

3. Planting beds and individual plant pits shall be kept free of weeds, and mulch shall be replaced as required to maintain the specified layer of mulch. Beds and individual pits shall be neat in appearance and maintained to the designed layout.

4. Plants that die during the maintenance period shall be removed and replaced by the Contractor during that growing season, unless directed otherwise by the Owner's Representative.

5. Spraying of insecticides or herbicides shall be done by State-licensed professionals. Spraying for insects, pests and diseases shall conform to the National Arborist Association Standards under the section entitled “Standards for Pesticide Application Operations”, as currently adopted and as approved by

the Landscape Architect. All insecticides, pesticides, and herbicides shall be EPA-approved and shall conform to the requirements MCRG: Massachusetts Control Recommendation Guide for Insect, Disease, and Weed Pests of Shade Trees and Woody Ornamentals, latest edition, University of Massachusetts, Amherst, College of Food and Natural Resources.

C. During the maintenance period, any decline in the condition of plantings shall require the Contractor to take immediate action to identify potential problems and undertake corrective measures.

3.06 ACCEPTANCE

A. Upon completion of all planting work, the Contractor shall request in writing that the Owner's Representative inspect the planting work.

B. Acceptance Standards: If plant material is reviewed when it is in full leaf, leaves shall be plump with water with a shape indicative of the species and shall be free of insect, pest and disease damage. Twigs shall have living cambium for their full length. Twigs and branches shall have a full bud set for their full length, including terminal buds. Trunks and branches shall be free of frost cracks; sun scald; damage due to insects, pests, and disease; structural defects; and damage resulting from machinery or tools. Plant material inspected and reviewed when the plants are not in full leaf shall have twigs, branches and trunks meeting the above requirements. All plants regardless of the season of review shall have a minimum of 75 percent healthy, balanced branching structure with a healthy terminal leader(s) with viable terminal bud(s).

C. If any number of plants do not meet these Acceptance Standards at the time of inspection, or if in the Owner's Representative's opinion, workmanship is unacceptable, written notice will be given by the Owner's Representative to the Contractor in the form of a punch list which itemizes necessary planting replacements and/or other deficiencies to be remedied. All plants that do not meet these Acceptance Standards shall be removed from the project within seven days of receipt of the punch list. Replacements shall conform in all respects to the Specifications for new plants and shall be planted in the same manner.

3.07 GUARANTEE

A. Trees and shrubs shall be guaranteed for one year from the date of Substantial Completion of the entire project.

B. At the end of the guarantee period, a final inspection will be held to determine whether any replacements are required. Each plant shall he plumb, shall have a character that is natural for its species as determined by the Owners Representative, and shall conform to the Acceptance Standards described in this Section 02950 - Planting. Plants found to be unacceptable shall be removed promptly from the site and replaced according to this Section 02950 - Planting. Replacements plants shall be guaranteed for an additional year.

C. All replacements shall be plants of the same kind and size specified in the Plant List. The cost shall be borne by the Contractor, except for replacements due to vandalism.

END OF SECTION

SECTION 03300

CAST IN PLACE CONCRETE

PART 1 - GENERAL

1.01 GENERAL PROVISIONS

A. Attention is directed to the Contract and General Conditions and all Sections within Division I which are hereby made a part of this Section of the Specifications.

1.02 DESCRIPTION OF WORK

A. Work Included: Provide labor, materials and equipment necessary to complete the work of this Section, including but not limited to the following site improvements:

1. Fiber re-inforced concrete paving and concrete curb wall
2. Concrete Base Course
3. Footings
4. A portion of the concrete spray deck paving is to be finished with a color hardener. Refer to Section 03350 - Colored Concrete Finishing.

B. Related Work:

1. Section 02200 - Earthwork
2. Section 02510 - Bituminous Concrete Paving
3. Section 02830 - Chain Link Fence
4. Section 02800 - Site Improvements
5. Section 02860 - Play Equipment

1.03 SUBMITTALS

A. Submit the following in accordance with Section 01300 - Submittals.

1. Concrete mix designs. Concrete mix design submittal shall include the following information:

(a) Proportions of cement, fine and coarse aggregate, and water.
(b) Water cement ratio, design strength, slump and air content.
(c) Type of cement and aggregates.
(d) Type and dosage of all admixtures.
(e) Percent of polypropylene fiber
(f) Range of ambient temperature and humidity for which the design is valid..
(g) Certification by ready-mix plant of psi of concrete mix design.

2. Submit Product data for the following:

(a) Curing materials.

(b) Joint fillers, Sealants, and Sealant Primers: Provide manufacturer's product data and manufacturer's installation instructions. Provide manufacturer's color choices for sealant.
(c) Form materials and form-release agents.
(d) Steel reinforcement and reinforcement accessories.
(e) Expansion Joint filler and sealant.

B. Steel Reinforcement Shop Drawings: Details of fabrication, bending, and placement, prepared according to ACI 315, "Details and Detailing of Concrete Reinforcement." Include material, grade, bar schedules, stirrup spacing, bent bar diagrams, arrangement, and supports of concrete reinforcement.

C. Submit results of concrete cylinder tests

1.04 TESTING

A. The Contractor shall engage an independent laboratory acceptable to the Owner shall pay for testing of concrete as follows:

1. 4 (2 each) cylinders of concrete for strength testing of concrete utilized in concrete retaining walls.

1.05 REFERENCE STANDARDS

A. Comply with applicable requirements of the following standards. Where these standards conflict with other specified requirements, after notifying the Architect the most restrictive requirement shall govern.

1. American Concrete Institute (ACI)

212 Guide for Use of Admixtures in Concrete
301 Specifications for Structural Concrete for Buildings
305 Hot Weather Concreting
306 Cold Weather Concreting
316 Recommended Practice for Construction of Concrete Pavements and Concrete Bases
347 Recommended Practice for Concrete Formwork

2. American Society for Testing and Materials (ASTM):

A615 Deformed and Plan Billet-Steel Bars for Concrete Reinforcement
C33 Concrete Aggregates
C94 Ready-Mixed Concrete
C143 Slump of Portland Cement Concrete
C150 Portland Cement
C171 Sheet Materials for Curing Concrete
C260 Air-Entraining Admixtures for Concrete
C309 Liquid Membrane-Forming Compounds for Curing Concrete
C494 Chemical Admixtures for Concrete
C920 Elastomeric Joint Sealants

C920 Use of Elastomeric Joint Sealants
D1557 Moisture - Density Relations of Soils and Soil-Aggregate Mixtures Using 10-lb. (4.5-kg) Rammer and 18-in. (457-mm) Drop

3. Commonwealth of Massachusetts Highway Department, Standard Specifications for Highways and Bridges, latest edition, Construction and Materials specifications for Concrete.

1.06 QUALITY ASSURANCE

A. Installer Qualifications: An experienced installer who has completed concrete Work similar in material, design, and extent to that indicated for this Project and whose work has resulted in construction with a record of successful in-service performance.

B. Maintain field records of time, date of placing, curing, and removal of forms of concrete in each portion of the work.

1.07 PROJECT CONDITIONS

A. Establish and maintain required lines, surfaces, and elevations.

B. Do not install concrete work over wet, saturated, muddy, or frozen subgrade.

C. Do not install concrete when air temperature is below 40 degrees F. Use of calcium chloride, salt, or any other admixture to prevent concrete from freezing is prohibited.

D. Protect adjacent work. Provide temporary barricades and warning lights as required for protection of project work and public safety.

E. Calcium chloride, salt, or any other admixture to prevent concrete from freezing is prohibited.

1.08 DELIVERY, STORAGE AND HANDLING

A. Deliver, store, and handle steel reinforcement to prevent bending and damage.

PART 2 - PRODUCTS

2.01 BASE COURSES

A. Base material under footings and paving shall be as specified under Section 02200, Earthwork.

2.02 CONCRETE MIX

A. Provide ASTM C94 ready-mixed concrete. Batch mixing at site is not acceptable. Use ACI 301 Method 1 or Method 2 to determine mix proportions.

B. Concrete shall conform to ASTM C94. One copy of the certificate of delivery shall be submitted immediately upon arrival of each load of concrete at the site.

1. Indicate water added to mix at job site on each delivery ticket. Show quantity of water added. Site water tempered mixes exceeding specified slump range will be rejected as not complying with specification requirements.

C. Unless other indicated on the Drawings, minimum 28 day compressive strength shall be 4,000 psi.

D. Concrete Aggregate: Provide ASTM C33 normal weight aggregates, 3/4" maximum size, clean, uncoated crushed stone or gravel coarse aggregate free of materials which cause staining or rust spots; fine aggregate shall be clean natural sand.

E. Polypropylene reinforcement fibers shall be added at the rate of 1.0 lb/cubic yard of concrete.

1. Provide polypropylene fibrillated fibers of multi-design ASTM C1116C/116M, Section 4.1.3 Type III. Fibers must be made of 100% virgin polypropylene fibrillated fibers of multi-design gradation as manufactured by Fibermesh, Synthetic Industries, 4019 Industry Drive, Chattanooga, Tennessee 37416; Masterfiber M70 by BASF, or an approved equal.

F. Concrete slump shall be no less than 2" nor greater than 4" determined in accordance with ASTM C143.

G. Concrete shall be air entrained type. Air content by volume shall be 4 to 6%.

H. Concrete shall contain a water reducing agent to minimize the water cement ratio of the mix, at the specified slump.

I. No calcium chloride or admixtures containing calcium chloride shall be added to the concrete. No admixtures other than those specified shall be used in the concrete without the specific written permission of the Engineer.

J. No concrete shall be placed by pumping methods.

2.03 CEMENT

A. Cement shall be Portland Cement conforming to ASTM C150, Type 2.

2.04 ADMIXTURES

A. Except as otherwise specified, use of concrete admixtures shall conform to ACI 212.

1. Air entraining agent shall conform to ASTM C260.

2. Water reducing agent shall conform to ASTM C494, Type A.

3. Water reducing agent-retarder shall conform to ASTM C494, Type D.

2.05 WATER

A. Water shall conform to ASTM C94, Section 4.1.3.

2.06 STEEL REINFORCEMENT

A. Steel reinforcing bars shall conform to ASTM A615, Grade 60.

2.07 FORMWORK

A. All concrete work shall be formed.

B. The form facing materials shall produce a smooth, hard, uniform texture on the concrete to match finish of existing wall to remain.

C. Form material for walls shall be plywood, tempered concrete-form grade hardboard, or metal, capable of producing the required finish.

D. Forms shall be true to line and free of warp and shall be of sufficient strength when braced to resist the pressure of concrete during placement within the allowable tolerances.

E. Surfaces of the forms to be in contact with concrete shall be coated with non-staining form release compound, free of kerosene, oil and wax. Wetting or coating with grease or oil will not be accepted as a substitute.

F. Exposed concrete arises shall be chamfered. Chamfer shall be mitered at changes of direction.

G. Formwork for footings shall be metal, glass-fiber-reinforced plastic, paper, or fiber tubes that will produce surfaces with gradual or abrupt irregularities not exceeding specified formwork surface class. Provide units with sufficient wall thickness to resist plastic concrete loads without detrimental deformation

2.08 FORM RELEASE AGENT

A. Form-Release Agent: Commercially formulated form-release agent that will not bond with, stain, or adversely affect concrete surfaces and will not impair subsequent treatments of concrete surfaces.

2.10 FORM TIES

A. Form Ties: Factory-fabricated, removable or snap-off stainless steel or fiberglass -reinforced plastic form ties designed to resist lateral pressure of fresh concrete on forms and to prevent spalling of concrete on removal.

B. Furnish units that will leave no corrodible metal closer than 1 inch to the plane of the exposed concrete surface or that, when removed, will leave holes not larger than 1 inch in diameter in concrete surface.

2.10 CURING MATERIALS

A. Type 2 Liquid Membrane-Forming Compounds for Curing Concrete shall be used in accordance with ASTM Designation C-309-58 or AASHO Designation M140-57 or the latest revisions thereof.

2.11 EXPANSION JOINTS

A. Expansion joints

1. Joint filler shall be preformed filler conforming to ASTM D 1751 or AASHTO M 213. Joint filler shall be recessed ½" to receive sealant, and shall be one piece, extending to the full depth and width of the joint.

a. Provide W.R. Meadows “Snap-cap” or equal to provide ½" recess.

2. Seal joints horizontal joints with a non-staining, two component polyurethane based sealant conforming to Fed. Spec. TT-S-00227, Class A, and ASTM C920, Type M, Grade P, Class 25, Use T, with a Shore A Hardness of 30±5 or better.

3. Colors of sealant shall be selected from manufacturer’s standard colors to match concrete color as closely as possible.

2.12 CONTROL JOINTS

A. Tool control joints to not less than 25% of slab depth.

B. Unless otherwise indicated on the Drawings, control joints shall be located at 10 feet o.c. maximum.

C. Reinforcing shall continue through control joints.

PART 3 - EXECUTION

3.01 GRADING

A. Make any corrections necessary to base course material furnished and installed under SECTION 02200, Earthwork, to bring base material to the sections and elevations shown on the Contract Drawings.

B. Existing subgrade material which will not readily compact as required shall be removed and replaced with satisfactory materials. Additional materials needed to bring subgrade to required line and grade and to replace unsuitable material shall be material conforming to Section 02200 Earthwork.

3.02 FORMWORK

A. Formwork shall be constructed, braced and tied so that the formed surfaces of the concrete will be perfectly true, smooth and to the dimensions shown on the Drawings, within the tolerances for formed surfaces as specified in ACI 301.

B. Forms shall not be moved for seventy-two (72) hours after the Cement concrete has

been placed, or for a longer period if directed by the Landscape Architect/Engineer. Extreme care shall be taken in removing forms in order that no damage will be done to the Cement concrete. Under no condition shall any bar, pick or other tool be used which depends upon leverage on the Cement concrete for removal of the forms.

3.03 JOINTING

A. Unless otherwise indicated on the Drawings, expansion joints shall be located at 30 feet o.c. maximum and at all curbs and walls.

3.04 REINFORCEMENT

A. Reinforcing bars showing cracks after bending shall be discarded and replaced with new material conforming to this Section at no additional cost to the Owner.

B. Reinforcing shall be thoroughly cleaned of loose mill and rust scale, dirt, ice, and other foreign material which may reduce the bond between concrete and reinforcing. Where there is a delay in placing concrete after reinforcement is in place, bars shall be reinspected and cleaned when necessary.

C. After forms have been coated with form release agent, but before concrete is placed, reinforcing steel shall be securely wired in exact position called for, and shall be maintained in that position until concrete is placed and compacted.

D. Except as otherwise noted, laps at joints in welded wire fabric reinforcement shall be at least 6 inches and shall be securely tied with wire.

E. Except as otherwise specified, reinforcing steel shall be spliced by lapping bar ends, placing bars in contact, and tightly wiring. Minimum lap of spliced bars shall conform to ACI 318.

H. Unless otherwise indicated on the Drawings, reinforcing shall extend within 2 inches of formwork and expansion joints. Reinforcement shall continue through construction joints.

3.05 COLD WEATHER CONCRETING

A. Procedures shall be in accordance with provisions of ACI 306.

3.06 HOT WEATHER CONCRETING

A. Procedures shall be accordance with the provision of ACI 305.

B. Concrete just placed shall be protected from the direct rays of the sun and the forms and reinforcement just prior to placing shall be sprinkled with cold water. Every effort shall be made to minimize delays which will result in excessive mixing of the concrete after arrival on the job.

C. During periods of excessively hot weather (95 degrees or above) ingredients in the concrete shall be cooled insofar as possible and cold mixing water shall be used to

maintain the temperature of the concrete at permissible levels all in accordance with the provisions of ACI 305. Any concrete with a temperature above 95 degrees F., when ready for placement will not be acceptable and will be rejected.

D. Temperature records shall be maintained throughout the period of hot weather giving air temperature, general weather conditions (calm, windy, clear, cloudy, etc.) and relative humidity. Records shall include checks on temperature of concrete as delivered and after placing in forms. Data should be correlated with the progress of the work so that conditions surrounding the construction of any part of the structure can be ascertained.

3.07 CONCRETE PLACEMENT

A. Before placing concrete, forms and space to be occupied by concrete shall be thoroughly cleaned, and reinforcing steel and embedded metal shall be free from dirt, oil, mill scale, loose rust, paint and other material which might tend to reduce bond.

B. Existing concrete, earth and other water permeable material against which new concrete is to be placed shall be thoroughly damp when concrete is placed. There shall be no free water on the surface.

C. Concrete which has set or partially set before placing shall not be employed. Retempering of concrete will not be permitted.

D. Segregation of the concrete shall be prevented during handling; should any segregation occur, the concrete shall be remixed before it is placed. Concrete shall not be allowed to drop freely more than 4 feet. If the free drop to the point of placement must exceed 4 feet, the Contractor shall obtain the approval of the Engineer for the proposed method of depositing the concrete. The concrete shall not be required to flow over distances greater than 3 feet in any direction in the forms or on the ground, unless otherwise permitted by the Engineer.

E. Concrete shall be thoroughly spaded, and tamped, and vibrated to secure a solid homogeneous mass, thoroughly worked around reinforcement and into corners of forms.

3.08 FINISHING

A. Exposed tops of footings and curbs: Smooth trowel exposed surface. Provide light broom finish.

B. Spray deck paving shall have a mag float swirl finish.

C. Exposed surfaces of curb walls: Hand-rubbed smooth finish.

1. It is the intention that all concrete be sound and dense. Concrete exhibiting defects on surfaces exposed to public view shall be removed and replaced or repaired in accordance with method that achieves a surface which is acceptable to the Landscape Architect. All such removal or repairs shall be at the Contractor's expense.

2. Formed concrete surfaces which will be visible after completion of the structure shall have a "smooth form hand-rubbed" finish, as defined by ACI 301.

   (a) At formed surfaces exposed to view, chip off fins and other projections and trowel patch all voids, honeycombs and air pockets exceeding ½" in any dimension.

   (b) Pull tie-rods and patch voids formed by tie-rod cones flush with adjacent surfaces.

3.09 CURING AND PROTECTION

A. It is essential that concrete be kept continuously damp from time of placement until end of specified curing period. It is equally essential that water not be added to surface during finishing operations, and not earlier than 24 hours after concrete placement. Between finishing operations, surface shall be protected from rapid drying by a covering of waterproofing paper. Surface shall be damp when the covering is placed over it, and shall be kept damp by means of a fog spray of water, applied as often as necessary to prevent drying, but not sooner than 24 hours after placing concrete. None of the water so applied shall be troweled or floated into surface.

B. Walls and vertical surfaces shall be cured by maintaining wood forms continuously wet during curing period, or by wrapping with continuous .006" polyethylene with taped joints.

C. Concrete pavement surfaces shall be cured by completely covering with curing paper or by use of a curing compound.

   1. Concrete cured using curing paper shall be completely covered with paper with seams lapped at least 2" and sealed with tape. During curing period, surface shall be checked frequently, and sprayed with water or curing compound as applicable, as often as necessary to prevent drying, but not earlier than 24 hours after placing concrete.

   2. Concrete cured with a curing compound shall have curing compound applied at a rate of 200 square feet per gallon in two applications perpendicular to each other.

D. Curing period shall be 7 days, minimum.

3.10 PROTECTION OF CONCRETE SURFACES

A. Concrete surface shall be protected from traffic or damage. If necessary 1/2 inch thick plywood sheets shall be used to protect the exposed surface.

END OF SECTION

COLORED CONCRETE FINISHING

SECTION 03350

PART 1 - GENERAL

1.01 GENERAL PROVISIONS

A. Attention is directed to the General Conditions of the Contract, all Divisions of the Specifications and the Contract Drawings, all of which apply to this Section.

1.02 DESCRIPTION OF WORK

A. This Section specifies dry shake colored hardener applied to Spray Deck pavement to provide a colored, non-slip finish.

B. Related Work:

1. Section 03 30 00 – Cast-in-Place Concrete

1.03 QUALITY ASSURANCE

A. Manufacturer Qualifications: Manufacturer with 10-years of experience in manufacture of specified products.

B. Installer Qualifications: An installer with 5-year of experience with work of similar scope and quality, or installer qualified by manufacturer of color hardener.

C. Comply with the requirements of ACI 301.

D. Obtain each specified material from same source and maintain high degree of consistency in workmanship throughout Project.

E. Notification of manufacturer's authorized representative shall be given at least 1 week before start of Work.

F. Sample Panels:

1. Provide the number of mockups sample panels required to obtain a satisfactory visual appearance and to verify the adequacy of dry and wet slip resistance.

a. Mock-ups shall be a minimum of 4’ x 4’ in size.

b. Remove mockups when directed.

1.04 SUBMITTALS

A. Product Data: Submit manufacturer's complete technical data sheets for the following:

1. Dry-shake colored hardener.
2. Curing compound.
3. 6” x 6” sample of concrete finished with custom color hardener.

1.05 DELIVERY, STORAGE AND HANDLING

A. Deliver products in original factory unopened, undamaged packaging bearing identification of product, manufacturer, batch number, and expiration data, as applicable.

B. Store the product in a location protected from damage, construction activity, and precipitation in strict accordance with the manufacturer's recommendations.

1.06 ENVIRONMENTAL CONDITIONS

A. Schedule placements to minimize exposure to wind and hot sun before curing materials are applied.

B. Protect fresh concrete from moisture and freezing.

C. Comply with professional practices described in ACI 305R and ACI 306R.

PART 2 - MATERIALS

2.01 PRODUCTS

A. Dry-shake Colored Hardener shall be Lithochrome Color Hardener manufactured by L.M.Scofield Company, Douglassville, GA (201-672-9050) or equal.

1. Dry-shake Colored Hardener shall be factory proportioned, mixed, and packaged, ready to use surface hardener.

a. Color additives shall conform to ASTM C 979 Pigments for Integrally Colored Concrete.

2. Color shall be a custom factory-mixed color “T132-6 Toy Blue” Lithochrome Color Hardener manufactured by L.M. Schofield or equal.

B. Curing Compound for Dry-Shake Colored Hardener shall comply with ASTM C309 and be of the same manufacturer as colored hardener, for use with dry-shake colored hardener as follows:

1. Lithochrome Colorwax, or equal.

2. Color shall be as selected by the Landscape Architect.

PART 3 - EXECUTION

3.01 INSTALLATION - DRY-SHAKE COLORED HARDENER

A. Application rate shall be as recommended by the manufacturer for the particular application, ranging from 90 lbs/100 square feet to 120 lbs/100 square feet.

1. Apply 2/3 of specified application rate to freshly floated concrete surface. Bleed water shall not be present during or following application of first and second shake.

B. Distribute evenly by hand or mechanical spreader designed to apply floor hardeners. Consult manufacturer for recommended mechanical spreaders.

C. As soon as dry-shake material has absorbed moisture, indicated by uniform darkening of surface, mechanically float surface a second time, just enough to bring moisture from base slab through dry-shake color hardener.

D. Immediately following second floating, apply remaining 1/3 of specified application rate. If applied by hand, broadcast in opposite direction of first application for a more uniform coverage. If a mechanical spreader is used, apply the same manner as previously described.

E. As soon as dry-shake material has absorbed moisture, mechanically float concrete surface a third time.

F. Do not add water to the surface.

3.02 FINISHING

A. After application of the final shake, the surface shall be floated, and then hand or machine troweled. To prevent burning or darkening of the surface, hard steel troweling (burnishing) should be minimized, especially at edges and joint lines. Provide magnesium float non-slip finish.

B. All surfaces should be finished within reasonably the same time after placing.

3.03 SEALING

A. Prepare dry, cured concrete surfaces according to manufacturer's instructions.

1. The seal coat should not be applied until 28 days after placement of concrete, and assumes that a cure coat has been applied.

3.04 PROTECTION OF FINSIHED WORK

A. The Contractor is responsible for protecting the surface quality of the concrete slab before and after application of finish.

END OF SECTION

METAL RAILINGS

SECTION 05500

PART 1 - GENERAL

1.01 GENERAL PROVISIONS

A. Attention is directed to the General Conditions of the Contract, all Divisions of the Specifications and the Contract Drawings, all of which apply to this Section.

1.02 DESCRIPTION OF WORK

A. This section specifies furnishing, fabrication, and installation of:

1. Ramp rails

1.03 RELATED WORK

A. Section 03300 - Cast-In-Place Concrete

1.04 INSTALLER/FABRICATOR QUALIFICATIONS

A. Installer Qualifications: An experienced installer and fabricator who has completed metal work similar in material, design, and extent to that indicated for this Project and whose work has resulted in construction with a record of successful in-service performance.

1.05 QUALITY ASSURANCE

A. Provide shop-drawings stamped by a registered Engineer verifying that rails comply with all statutory load requirements.

B. Handrail fabrication and installation shall comply with ADA Accessibililty Guidelines (ADAAG) and Massachusetts Architectural Access Board Regulations (MAAB).

1.06 SUBMITTALS

A. Submit the following in accordance with the requirements of Division 1, Section 01300 Submittals.

B. Shop Drawings: Submit shop drawings of work showing size and thickness of each member, type of material, method of connection and assembly. Show dimensions, clearances, anchorages, relationships to surrounding work, coatings, and other

pertinent details of fabrication and installation.

1. Show profiles, reinforcing, fasteners, and any accessories.
2. Indicate welded connections using standard AWS welding symbols. Indicate net weld lengths.
3. Where feasible, take field measurements prior to preparation of shop drawings and fabrication. Do not delay job progress; allow for trimming and fitting where field measurements before fabrication will delay work.

C. For railings provide shop drawings stamped by a registered Engineer in the State of Massachusetts and structural calculations demonstrating compliance with loading requirements of all applicable codes.

D. Product Data: Provide manufacturer's product data, installation instructions, use limitations, and recommendations for each material used. Provide certifications that materials comply with requirements.

E. Welder's Certification: Provide certification, signed by Contractor, certifying that welders employed at project comply with requirements specified under AWS D1.1 and AWS D1.2.

1.07 QUALITY ASSURANCE

A. Engineering: Provide services of a professional engineer, registered in the Commonwealth of Massachusetts to design and certify that the work of this Section meets or exceeds performance requirements specified.

B. Shop fabricate work to greatest extent possible. Label each piece in shop to facilitate field assembly.

C. Welding: Perform welding in conformance with AWS D1.1 and D1.3 as applicable.

1.08 PROJECT DELIVERY, STORAGE, AND HANDLING

A. Store work off ground and under cover. Protect from damage. Repair and clean work before erection.

PART 2 - PRODUCTS

2.01 MATERIALS

A. General: Provide products and materials of new stock, free from defects, and of best commercial quality for each intended purpose.

B. Steel Plates, Shapes, and Bars: ASTM A 36.

C. Steel Pipe: ASTM A 53, Schedule 40, Type S (seamless), galvanized steel, Grade A for cold-bending.

D. Welding Rods: Conform to AWS Standards and recommendations of welding rod manufacturer.

E. Grout for Exterior applications: Provide factory packaged, non-shrink, latex-modified, non-staining, hydraulic controlled expansion cement formulation for mixing with water at project site. Provide formulation that is resistant to erosion from water exposure without need for protection by a sealer or waterproof coating.

2.02 FABRICATION - GENERAL

A. Fabricate work of this Section to be straight, plumb, level and square, and to sizes, shapes and profiles indicated on approved shop drawings. Ease exposed edges. Cut, reinforce, drill and tap metal work as required for proper assembly.

1. Fabricate miscellaneous supports, brackets, braces and the like required to fully complete the work.

2. Obtain loading requirements from suppliers of work to be supported. Design and support systems with a safety factor of at least 6 unless otherwise indicated.

3. Allow for thermal movement resulting from 100 degree F change in ambient temperature.

4. Shear and punch metals accurately. Remove burrs.

5. Ease exposed edges to a radius of approximately 1/32 inch unless indicated otherwise. Form bent corners to smallest radius possible without causing grain separation or impairing work.

6. Remove sharp or rough areas on exposed traffic surfaces.

7. Weld seams continuously. Spot welding is permitted for temporary welding only.

B. Work Exposed to View: For work exposed to view, select materials with special care. Provide materials which are smooth and free of blemishes such as pits, roller marks,

trade names, scale and roughness. Fabricate work with uniform hairline joints. Form welded joints and seams continuously. Grind welds flush and smooth. For exposed fasteners, use hex head bolts or Phillips head machine screws.

C. Ramp rails: Conform to ASTM E 985 for design and engineering for structural performance based on testing performed in accordance with ASTM E 894 and ASTM E 935, using load and deflection values specified below.
(1) 50 pounds per lineal foot applied in any direction at the top and to transfer this load through the supports to the structure

(2) 200 lb concentrated load applied in any direction at any point along the top and to transfer this load through the supports to the structure,

(3) Intermediate rails and components to withstand a 50 lbs/square foot horizontal load.

E. Provide members of type, size, style and profile indicated, unless otherwise required to support loads.

F. Provide fully welded construction, using internal slip connectors. Grind joints smooth and flush.

G. Provide coped joints at member intersections, fully welded all around. Provide mitered connections at square turns unless radius turns are indicated.

2.03 FINISH

A. Railings shall be shop primed and painted with a polyurethane coating as specified below.

1. Touch-up all breaks on hot-dip surfaces caused by cutting, welding, drilling or undue abrasion with liquid zinc coating.

2. One Coat Primer (dry film thickness 3.0 to 4.0 mils) of Tnemec No. 66 Hi-Build Epoxoline" Epoxy; Porter No. 4361 MCR-43 High Build Epoxy, Dupont "Corlar epoxy primer, or equal.

3. Apply one finish coat (dry film thickness 1.5 to 2.0 mils per coat) as follows: Tnemec No. 74 Endura-Shield IV Acrylic Polyurethane, Porter No. 8731 Hythane Ultra Acrylic Polyurethane, DuPont Imron Polyurethane, or equal.

4. Field touch up damaged or abraded galvanized surfaces with ZRC Cold

Galvanizing Compound, PPG Speedhide Galvanized Steel Paint, or Tnemec 90-93 Zinc rich primer or approved equal, and touch up with above finish paint.

B. Color of finish paint shall be chosen by the Owner from the manufacturer's standard color choices.

Part 3 - EXECUTION

3.01 PREPARATION

A. Coordinate and furnish anchorage devices, setting drawings, diagrams, templates, instructions, and directions for installation of concrete inserts, sleeves, anchors, bolts and miscellaneous items to be embedded or attached to concrete work, masonry work, or structural steel work.

3.02 INSTALLATION- GENERAL

A. Fastening to In-Place Construction: Provide anchorage devices and fasteners necessary for securing work of this Section to in-place construction.

B. Cutting, Fitting and Placement: Perform cutting, drilling, and fitting required for installation work of this Section.

C. Erect work square, plumb and true, accurately fitted, and with tight jonts and intersections. Avoid field cutting and drilling to the greatest extent possible.

D. Fit exposed connections accurately together to form hairline joints. Shop weld connections, except when work cannot be shop welded due to shipping size or galvanizing limitations.

E. Field Welding: Comply with AWS D1.1 and D1.2 for procedures of manual metal-arc welding, appearance and quality of welds, and correction methods for defective welds.

F. Where posts are fastened into concrete, set such members in proprietary type expanding grout manufactured specifically for such purposed. Use grouts strictly in accordance with manufacturer’s directions.

3.03 INSTALLATION

A. Install handrails as indicated on approved shop drawings. Adjust handrails prior to final anchoring and grouting. Plumb posts in all directions. Provide 1-1/2" clearance between walls and hand rails unless otherwise indicated.

END OF SECTION

SECTION 09614

DETECTABLE WARNING PANELS

PART 1 - GENERAL

1.01 GENERAL PROVISIONS

A. All of the Contract Documents, including the Contract Form, General Provisions, General Conditions, Supplemental Conditions, and all Attachments to the General Provisions, and Division 1 - General Requirements, apply to the work of this Section.

1.02 SCOPE OF WORK

A. Provide all equipment and materials, and do all work necessary to furnish and install wet-set Detectable Warning Panels as indicated on the Drawings and as specified.

1.03 RELATED WORK

A. Section 02700 - Granite Curbing.
B. Section 03300 - Cast-in-Place Concrete.

1.04 REFERENCE STANDARDS AND SPECIFICATIONS

A. Comply with applicable requirements of the following standards. Where these standards conflict with other specified requirements, the most restrictive requirements shall govern.

B. Detectable warning surface panels shall comply with detectable warnings on walking surfaces section of the American with Disabilities Act Section 705.1 of the 2010 ADA Standards for Accessible Design (ADAAG).

C. American Society for Testing and Materials (ASTM):

1. ASTM C-543 Chemical Resistance
2. ASTM D-1501 Simulated Sunlight
3. ASTM D-756 Procedure “E” Accelerated Service Test
4. ASTM D-570 Water Absorption

1.05 SUBMITTALS

A. Product Data: Submit manufacture’s literature describing products, installation procedures and maintenance.

B. Samples: Submit a sample of the panel proposed to be used.

1.06 QUALITY ASSURANCE

A. Provide wet-set Detectable Warning Panels and accessories as produced by a single manufacturer with a minimum of three (3) years experience in the manufacturing of wet-set Detectable Warning Panels.

1.07 DELIVERY, STORAGE AND HANDLING

A. Detectable Warning Panels shall be suitably packaged or crated to prevent damage in shipment or handling..

1.08 PROJECT CONDITIONS

A. Cold Weather Protection: Maintain minimum temperature of 40°F in areas to receive Place Detectable Warning Panels for at least 24 hours prior to installation, during installation, and for not less than 24 hours after installation.

1.09 GUARANTEE

A. Detectable Warning Panels shall be guaranteed in writing for a period of five (5) years from date of final completion. The guarantee includes defective work, breakage, deformation, fading, and loosening of panels.

PART 2 - PRODUCTS

2.01 MANUFACTURER

A. The Detectable Warning Panel specified is based on ADA Solutions, Inc. product (1-800-372-0519) or approved equal.

B. Color: Shall be chosen by the Owner from manufacturer's standard color choices.

2.02 DETECTABLE WARNING PANELS

A. Dome geometry of panels shall be in accordance with ADA Regulations for Detectable Warning on Curb Ramps with raised truncated domes with a diameter of nominal 0.9", a height of nominal 0.2" and a center to center spacing of 1.6" minimum and 2.4" maximum.

B. Detectable Warning Panels shall be a homogenous glass and carbon reinforced composite which is colorfast and UV stable.

1. Truncated domes shall be fiberglass reinforced.

2. Color shall be uniform throughout the interior and exterior of the material and shall not depend upon surface coating.

3. Thickness of units shall be 0.375" nominal with a 5/8" thick x 1" wide perimeter

flange.

C. Detectable Warning Panels shall be field replaceable without cutting existing concrete or pouring new concrete.

D. Slip resistance of Detectable Warning Panels when tested in accordance with ASTM C-1028 shall not be less than 0.80.

E. Chemical resistance of Detectable Warning Panels when tested in accordance with ASTM C-543 to withstand without any degradation or discoloration: 1% Hydrochloric Acid, Acetic Acid, Sulfuric Acid, Sodium Chloride, Sodium Hydroxide, Sodium Sulfate, Sodium Carbonate, Kerosene and Oil.

F. Detectable Warning Panels when tested in accordance with ASTM D-635 shall not sustain burning and be self extinguishing.

G. Detectable Warning Panels when tested in accordance with ASTM G-21 shall not promote fungus growth.

H. Detectable Warning Panel material surface flammability when tested in accordance with ASTM E-162 shall be less than 25.

I. Detectable Warning Panel smoke density when tested in accordance with ASTM E-662-03 shall be less than 0.5 at 1.5 minutes and less than 15 at 4 minutes.

2.03 MECHANICAL PROPERTIES

A. The panel shall meet the following for mechanical properties:

Test Method	**Mechanical Properties**	**Average Value**
ASTM C-170-99	Compressive Strength	28,900 PSI
ASTM C-580-02	Flexural Strength	29,300 PSI
ASTM C-307-99	Tensile Strength	11,600 PSI
ASTM C-1028	Slip Resistance	1.18 Dry, 1.05 Wet
AASHTO-H20	Load Bearing at 16,000#	No Damage

PART 3 - EXECUTION

3.01 INSTALLATION

A. Concrete shall be placed and finished true to line and grade and smooth to the required dimensions and gradient as indicated in the Drawings and as specified in Section 03300, Cast-in-Place Concrete.

B. Immediately after finishing concrete, an electronic level shall be used to verify that gradient and slope of finished concrete does not exceed maximum slope and gradient as indicated in the Drawings. No concrete shall be removed in the area to accept the panel.

C. Detectable Warning Panels shall be tamped (or vibrated) into the fresh concrete to ensure that the level of the panel is flush to the adjacent concrete surface. The embedment process shall not be accomplished by stepping on the panel as this may cause uneven setting which can result in air voids under the panel surface. The base of the truncated domes shall be set flush to the adjacent surface to permit proper drainage and eliminate tripping hazards between adjacent finishes.

D. Immediately after panel placement, the panel elevation shall be checked to be flush wih adjacent concrete. The elevation and slope shall be set as indicated in the Drawings. Ensure that the surface of the panel is flush with the surrounding concrete. Finish concrete around the panel's perimeter with a steel trowel.

E. Following the concrete curing stage, protective plastic wrap is to be removed from the panel surface by cutting the plastic wrap with a sharp knife tight to the concrete / panel interface.

3.02 CLEANING, PROTECTION AND MAINTENANCE

A. Protect panels against damage during construction period in compliance with manufacturer's specifications.

B. Protect panels against damage from rolling loads following installation by covering with plywood or hardwood.

C. Clean panels not more that four days prior to date scheduled for inspection intended to establish date of substantial completion.

D. Comply with manufacturer's maintenance instructions for cleaning and maintaining panel surface.

END OF SECTION

SECTION 16100

ELECTRICAL SERVICE SYSTEMS

PART 1 - GENERAL

1.01 SCOPE OF WORK

A. Labor, supervision, materials, tools, scaffolding, equipment, supplies, transportation and services for a complete and operational electrical system as specified shall be provided.

B. The Owner reserves the right to request references from all subcontractors and the right of final selection of Subcontractors.

C. Materials and equipment shall be installed in accordance with standards of the National Electrical Code, local codes, safety codes and ordinances.

D. New underground electrical service from existing EVERSOURCE utility pole. Electrical service to be 60A, single-phase 120/240V, installed in 2" conduit, installed into new 60A, main service panelboard installed in new outdoor NEMA 3R electrical cabinet, provided with utility meter socket. Work shall include all conduits, cable, excavation, backfill, surface restoration, concrete foundation, grounding and all associated equipment necessary for a complete installation.

E. Work under this Section shall include, but not be limited to:

1. New Basketball and Tennis LED lighting.
2. Installation of underground duct-bank from the control cabinets to the new sports lighting equipment and Splash Pad equipment.
3. Grounding system.
4. Metal raceways.
5. PVC raceways.
6. Power Wiring.
7. Foundation coring and foundation penetrations.
8. Excavation, backfill, resurfacing to match existing conditions as required to complete the entire project inclusive of restoration of all landscaping, etc. Work to be coordinated by the General Contractor
9. Anyother system herein after called for or shown on the drawings.

F. The Contractor shall include as an Allowance in his/her bid for charges by the utility companies or other authorities for work done by them and charged to the Contractor, or for any other fees or expenses required by utility companies necessary to complete the work of this Contract. Refer to Division I, Section 01020 Allowances and the Bid Form for the amount of the Allowance.

G. The Contractor shall provide any additional labor and materials required by the utility company to complete the work of this Section, at no additional cost to the Owner.

H. All work performed under this Section shall be performed by a MA licensed Electrician.

I. The Contractor is required to apply and obtain all permits required for this work. The City of Waltham will waive all fees associated with these applications.

J. An EVERSOURCE Electric - Work Order Application will be submitted to EVERSOURCE for the work specified in this section and as indicated on the Drawings by the City of Waltham Wires Department.

1.02 ELECTRIC UTILITY

A. The Electric Utility for this project is EVERSOURCE Electric. All coordination with the Electric Utility is the responsibility of the Contractor. All work and materials for the electric service shall be in accordance with the requirements of the Electric Utility, and are to be met under this Section and included in the bid price of the Contractor. Contractor shall adhere to EVERSOURCE's *"Information and Requirements for Electric Service (2008 or later)"*.

1.03 EXAMINATION OF SITE

A. Before submitting a Bid, this Contractor must visit the job site to determine the conditions under which the work is to be done.

1.04 DRAWINGS AND SPECIFICATIONS

A. Drawings and specifications are complementary to each other. Any labor and material which is called for by either, whether or not by both, or which is necessary for the successful operation of all systems, shall be furnished and installed. Discrepancies should be brought immediately to the attention of the Engineer.

B. Plans and specifications for this project should be examined to determine the scope and character of the work, the building design and function, and the required

C. Coordination with the Electrical Contractor and other Trades before and during construction.

D. Shop drawings and submissions of materials shall be made within five (5) days after the signing of the Contract; they are to be bound by section and submitted as a complete section. Seven (7) copies for approval shall be provided: two (2) copies for the Electrical Contractor; one (1) copy for the Electrical Engineer; one (1) copy for the City of Waltham; One (1) copy for the Site Engineer and two (2) copies to be held by the Electrical Contractor until job completion, at which time they are to be bound in

two (2) binders and transferred to the Owner.

E. This Contractor shall prepare an electrical set of coordination drawings to overlay with all other Trades. Drawings shall be prepared on translucent drawings to properly coordinate all of the other equipment to be installed. Prior to any installations, the Electrical Contractor must receive approval of drawings from the Engineer.

1.05 SUBMITTALS

A. Submit shop drawings and manufacturer's specifications for all materials to be furnished under this Section including:

1. Conduits and Wiring.
2. Panelboards.
3. Service Cabinets and Equipment.
4. Circuit Breakers.
5. Light poles and luminaries.
6. Wiring Devices and Receptacles.
7. Meter Sockets.
8. Grounding.

B. Submit samples of materials for use under this Section as directed by the Owner or Owner's Representative.

C. The Engineer's review shall be only for conformance with the design concept of the project and compliance with the specifications and Drawings. The responsibility of, and the necessity of, furnishing materials and workmanship required by the specifications and Drawings which may not be indicated on the shop drawings is included under the work of this Section.

1.06 INSURANCE

A. Insurance is to conform to the provisions and requirements as set forth in Information for Bidders Section.

1.07 CHANGES AND REVISIONS

A. Costs for changes and/or revisions shall be submitted to the Site Engineer with material and labor breakdown of charges and credits clearly itemized.

B. Work shall not be executed until approval has been received in writing from the Engineer.

1.08 WORKMANSHIP

A. Materials shall be new and shall conform to the standards of UL, Inc., in every case

where such a standard has been established for the particular type of material in question. Work shall be executed in a workmanlike manner and a competent Foreman shall be provided for the entire project.

B. After wires are pulled in and fixtures and equipment are installed, this Contractor shall make tests for performance, grounds, etc., and shall immediately remedy any defects. This Contractor shall provide equipment to be used for tests.

C. Work under this Contract must be so performed that the progress of the entire project, including work of all Trades, shall not cause delays or interference.

D. It will be the responsibility of the Electrical Foreman to instruct the Owner in the function, operation and maintenance of electrical systems and equipment. This is to be done upon completion of the installation, before leaving the job site and to the satisfaction of the Owner and Engineer.

1.09 MANUFACTURERS' NAMES AND TRADE NAMES

A. Throughout the specification types of materials may be specified by manufacturer's name and catalogue number in order to establish standards of performance and quality, and not to limit competition.

1.10 MATERIAL STORAGE AND OFFICE SPACE

A. This Contractor shall maintain at his own expense, where directed on the premises, neat covered storage for material and equipment, and office space where drawings and specifications shall be kept for records.

B. Equipment or material damaged during the construction period shall be replaced at this Contractor's expense.

1.11 GUARANTEE

A. Materials and labor incorporated in the work are to be guaranteed against defects for a period of one (1) year from date of substantial completion. This Contractor shall correct such defects that occur within the guarantee period and to the satisfaction of the Engineer without cost to the Owner, within a twenty-four (24) hour period.

B. This Contractor shall not be responsible for failures through normal usage, nor for those caused by neglect or abuse on the part of the Owner or his employees.

1.12 RELATED WORK

A. Following related work is not included in this Section and will be performed under the supervision of the electrical contractor by the general contractor.

1. Excavation, backfill and resurfacing required for underground electrical systems.
2. Major cutting and patching.

1.13 OPERATING INSTRUCTIONS

A. This Contractor shall furnish three (3) Operating and Maintenance Manuals outlining in detail the operational features of the following systems:

1. Basketball and Tennis sports lighting (on existing light poles).
2. Metal raceway and PVC system.
3. Cable.
4. Control Cabinets.

1.01 INSPECTIONS AND PERMITS

A. Obtain all necessary permits and licenses, and pay all fees for permits and inspections. Permit fees are the responsibility of the Contractor as part of his bid, as is all coordination with the local utility, EVERSOURCE.

B. The Contractor shall contact the City to arrange for inspection.

1.14 RECORD DRAWINGS

A. A set of record drawings shall be maintained at the job site for reference by the Engineer. Weekly, the Electrical Foreman will note changes and review drawings periodically with the Engineer. Changes, including feeders, lighting, power, panel schedules, duct-bank changes, etc., shall be recorded on the drawings. At the conclusion of the construction this Contractor shall order from the Engineer a three and one-half (3.5) inch disc with all drawing files. All changes shall be made on the disc and shall be compatible to that of AutoCAD Release 2010. Two (2) sets of black lined prints shall be submitted with all recorded changes, and with the file disc, to the Engineer for approval. Final payment for electrical work is contingent upon receipt of drawings. Cost of record drawings will be borne by this Contractor.

1.15 DEFINITIONS

A. The terms “Electrical Contractor”, “This Contractor", "Electrical Contractor", "Electrical Subcontractor", all refer to the work of this Section 26000.

1.16 PRODUCT DELIVERY, STORAGE, AND HANDLING

A. The General Contractor shall provide and pay for all dumpster services during the entire construction period. Suppliers and Sub-Contractors to bring all rubbish and

debris to the dumpster location daily. No costs are to be assessed to the suppliers or Sub-Contractors by the General Contractor for this service.

B. The Electrical Contractor, Sub-Contractors and suppliers, individually, shall furnish their own staging, scaffolding, and hoisting equipment to get workers, material and equipment from the point of delivery at the project site to the point of use or installation within the building and project site. All crane and rigging services required are the responsibility of each individual trade.

1.17 WORK CONDITIONS/SEQUENCE

A. If the Electrical Contractor find that conditions are not appropriate for them to begin the work of their trade, or if they are directed to perform their work out of sequence by the General Contractor, or if the General Contractor directs the Electrical Contractor to start and continue regardless of job conditions, the Electrical Contractor shall notify the Site Engineer in writing by certified mail immediately.

PART 2 - PRODUCTS
BASIC MATERIALS AND METHODS

2.01 RACEWAYS AND FITTINGS

A. Rigid conduit where used shall be heavy wall hot dipped, galvanized: Midland-Ross, Wheatland or Republic.

B. Size of conduit used shall be as indicated on the contract drawings.

C. Electrical Metallic Tubing (EMT) shall be mild steel, electrically welded, galvanized, Midland-Ross, Wheatland or Republic.

D. Plastic conduit shall be Type PVC40 Carlon Co. as noted on the drawings.

E. Conduit installed underground shall be rigid galvanized or Type PVC40 plastic conduit. Raceways and underground sweeps rising up into the control cabinets shall be rigid galvanized conduit.

F. During construction, ends of conduit shall be kept tightly plugged to exclude plaster, dirt, dust, moisture and debris.

G. Ends of conduit entering boxes shall be equipped with galvanized locknuts or bushings. Cut ends of conduit shall be reamed free of burrs and sharp edges.

H. A 200 pound tensile strength plastic line shall be left in each interior conduit run in which permanent wiring is not installed. Each spare underground conduit or duct between service points shall be provided with a fish wire.

I. Feeder conduits entering panels, junction boxes and similar equipment shall be provided with galvanized malleable iron locknuts and O.Z. or union malleable iron bakelite insulated type bushings or approved PVC adapter. Fittings shall have a ground lug and be grounded at all points in the system.

2.02 WIRE

A. Unless otherwise specified, conductors installed in conduit shall be Type THHN, 600V, 90 degree C. - Anaconda Densheath 900. Conductors shall be copper.

B. Covering of wires and cables designed to meet the above specifications shall have distinctive markings as required by the latest standards of UL, Inc., making them readily identifiable in the field.

2.03 GROUNDING

A. The entire system shall be grounded in accordance with the National Board of Fire Underwriters', State and local requirements.

B. Framework of the sports lighting poles, panels, control cabinet equipment, etc., shall be grounded to a ground loop or buss to receive a ground conductor.

C. This Contractor shall furnish and install an equipment ground wire in feeder runs to meet requirements of the National Electrical Code.

2.04 OUTLET BOXES

A. Outlet boxes shall be weatherproof, Steel City, Appleton, or Raco, galvanized of a type best adaptable to their respective use and in general four (4) square or octagon.

B. Outlet boxes shall be provided with only the holes necessary to accommodate conduit connected. Boxes shall be furnished with lugs, ears, covers and/or outlet devices for attachment.

C. Plastic boxes are NOT acceptable.

2.05 PULL AND JUNCTION BOXES

A. Pull and junction boxes shall conform to requirements of the National Electrical Code. They shall be galvanized code gauge steel construction with removable cover plate secured by 1/4" brass machine screws. Junction boxes shall be supported to the structure.

2.06 COMPOSITE HANDHOLES

A. Composite (polymer concrete) handholes for electrical facilities.

1. Manufactured from heavy-duty, fire-retardant polymer concrete reinforced composites, with UV stabilizers and vertical ribs for structural stiffness.

2. Dimensions shall be as required.

3. Color of electrical hand holes and covers to be green in grass areas and grey in sidewalk areas, as approved by the Engineer. Handholes to be installed flush with finish grade. Handholes to have open bottom. A layer of 6-inches of washed crushed stone (#57) shall be installed under each handhole to assist with drainage, and this compacted gravel base material shall extend out beyond the sidewalls of the handhole. Conduits shall sweep up and be at least 4-inches above handhole bottom and have all penetrations waterproofed.

4. Handholes and Covers shall be designed for street-rated, heavy duty applications, meeting the requirements of either: AASHTO HS-20 or ANSI/SCTE 77-2002 Tier 15 loading, with a minimum design load of 15,000 lbs for both the hand hole box and cover.

5. Quarzite or equal.

6. Provide with bolted, gasketed cover, containing two (2) stainless steel (penta-head) captive bolts and self-centering corrosion resistant nuts. Cover to have two (2) 5/8" x 4" lifting slots.

7. Cover to have skid resistant surface and be permanently engraved with "ELECTRICAL" logo.

8. Handholes shall meet the requirements of the latest edition of the National Electrical Code (latest edition) with regards to structural integrity, installation methods, grounding of the cover and metallic parts, etc. Handholes shall be UL listed for the intended use. Pullboxes shall be in accordance with the City of Waltham Wiring Department and as otherwise designated on the contract drawings.

2.07 SYSTEM OF LIGHT AND POWER

A. The secondary distribution system's is 120/240 volt, 1 phase, 3 wire, 60HZ AC.

2.08 BASKETBALL & TENNIS LED LIGHT FIXTURES

A. It shall be the responsibility of the Electrical Contractor to disconnect and remove the existing light fixtures on the existing basketball and tennis court light poles (poles shall remain in place).

B. The Electrical Contractor shall furnish and install new LED style sports lights on the existing basketball and tennis court light poles. Refer to drawings for quantities and types.

2.09 CIRCUIT BREAKERS

A. Circuit breakers for lighting and small power loads shall be bolt-on thermal magnetic, quick-make, quick-break, trip free and sized as designated on panel schedules.

B. Circuit breakers for distribution and power panels shall be bolt-on quick-make, quick-break, trip free, molded case type and sized as shown on panel schedules.

C. Circuit breakers shall be manufactured by Cutler Hammer Co., Siemens Co., Square D, General Electric or equal.

2.10 PANELS

A. Panels shall be circuit breaker type, sized as indicated on drawings.

B. Panels shall be mounted in code gauge steel cabinets having not less than six (6) inch gutters, equipped with hinged doors, flush catch lock and keys, having surface or flush trims as designed on schedules and drawings.

C. Provide engraved bakelite nameplate on trim of panels, indicating number and voltage.

D. Panels shall have equipment ground buss isolated from the system ground buss to receive the fifth wire, which is the equipment ground wire.

E. Panels shall have typewritten legends.

F. Panels shall be Cutler Hammer Co., Siemens Co., General Electric, Square D, or equal.

G. All panels shall have a door on door with locking devices.

2.11 METER SOCKETS

A. Meter Sockets: UL 414, UL 486B, and ANSI C12.7.

B. Outdoor meter sockets are to be NEMA 3R. Unless otherwise noted, meter sockets shall be ringless, with lever bypass, tin plated connections, and have provision for a fifth terminal on single-phase applications. Meter Sockets shall also meet the requirements of the local electric utility.

C. Meter Socket shall be either heavy duty or medium duty, 100 ampere minimum, ringless, 5 terminal, with approximate dimensions of 19”H x 13”W x 5”D. (Milbank U2860-XL-5T9 or approved equal).

2.12 WARNING TAPE

A. Warning tape shall be six (6) inches wide, polyethylene not less than 3.5 mil thick with a minimum strength of 1,500 psi and shall be manufactured by W.H. Brady Co., Panduit Corp., or approved equal. Tape shall be red for electric conduit, and red or yellow for communication conduit. Tape shall have black lettering on two lines as indicated below:

CAUTION CAUTION CAUTION
BURIED ELECTRIC LINE BELOW

2.13 CONTROL CABINET NEMA 4 ENCLOSURE (TWO DOOR TYPE)

A. The exterior grade outdoor enclosure shall be NEMA 4 as manufactured by Wiegmann Enclosures, Inc. #N4D746012-3PT; or Model Number MEAN4-607212 as Manufactured by Mass Electrical Apparatus, 42 Oakville Street, Lynn, MA, or approved equal. The cabinet doors, E body, shall be constructed from #10 & #12 steel which has a minimum thickness of 14 gauge. External welds will be made by using the Heliarc welding method; whereas, internal welds will be continuous. All welds shall be neatly formed and free of cracks, blow holes and other irregularities. All exterior welds will be continuous and ground smooth. The cabinets shall be ANSI 61 Grey baked powder coat finish.

1. Back panels shall be provided.

B. All inside and outside edges of the cabinet shall be free of burrs.

C. The cabinet shall be designed with a crowned to prevent the accumulation of water on its top surface.

D. The door opening shall be double flanged on all (4) sides which increases strength around openings and keeps dirt and liquids from entering the enclosure when door is opened.

E. A door restraint shall be provided to prevent door movement in windy conditions.

F. Reinforced lifting rings will be provided which will safely support an equipment load of at least 600 pounds in addition to the weight of the enclosure.

G. Floor stands shall be provided to raise the enclosure above ground level.

H. The cabinet doors will be a minimum of 80% of the front surface area.

1. The doors shall be furnished with a gasket that satisfies the physical properties as found in UL508 table 21.1 and shall form a weathertight seal between the cabinet and door.

I. The hinges shall be continuous and welded to the cabinet and door.

1. The hinges will be made of stainless steel and shall have a .250 inch diameter

stainless steel hinge pin.

2. The hinge pin shall be capped top and bottom by weld to render it tamperproof.

J. The latching mechanism shall be a 3-point draw roller type.

1. The pushrods will be turned edgewise at the outward supports and shall be .250 inch by .750 inch aluminum, minimum.
2. Rollers shall have a minimum diameter of .875 inch and will be made of nylon. The center catch shall be fabricated from .187 inch aluminum, minimum.
3. A removable center post will be provided.

K. An operating handle shall be furnished.

1. The handle will be stainless steel with a ¾ inch diameter shank.
2. The latching handle shall have a provision for padlocking in the closed position.

L. A light/alarm switch bracket shall be provided.

M. Steel 3/8-16 collar studs shall be used to mount equipment panels.

N. Unless otherwise specified, the outside surface of the cabinet shall have a smooth, uniform, Grey polyester powder coat finish inside and out. Print pocket and back panel shall have a smooth, uniform, white polyester powder coat

O. Enclosures intended for pad mounting shall be constructed with integral (welded-on) 12 inch floor stands that have .44 inch diameter mounting holes placed 6.88 inches from the left and right outside cabinet edges and 2.0 inches from front and rear enclosure dimensions.

A. Horizontal distance between bolt hole centers may vary with the enclosure width dimension.

PART 3 - EXECUTION

3.01 INSPECTION AND COORDINATION

A. This Contractor shall inspect surfaces and areas that will receive his material and the job conditions as they exist, and report any conditions that may adversely affect his work. Notify Engineer or Electrical Contractor of unsuitable conditions.

B. Coordinate work with construction schedule and job progress.

C. This Contractor shall confer with the Electrical Contractor and other Trades to coordinate his work and to properly locate systems to avoid conflict and interference.

D. Any interference with the work of other Trades or with Engineering or structural

details shall be brought to the attention of the Engineer for decision before installation. Contractor's failure to so coordinate his work will not relieve him of the responsibility to correct work to suit building conditions.

3.02 INSTALLATION

A. Installation shall be by skilled workmen using proper equipment. Commencement of work shall be deemed as acceptance of existing conditions by installer.

B. Entire application shall be in strict accordance with manufacturer's recommendations and the standards of the National Electrical Code, local codes and ordinances, OSHA safety codes and regulations.

C. After wires are pulled in and all fixtures are installed, this Contractor shall make tests for performance, grounds, etc., and shall immediately remedy defects. Equipment for tests shall be borne by this Contractor.

D. Work under this Contract must be so performed that the progress of the entire project, including work of all Trades shall not cause delays or interference. Material and apparatus shall be installed as fast as condition of the building will permit.

3.03 RACEWAYS AND FITTINGS

A. Refer to drawings for conduit sizes.

B. Conduit installed underground or under concrete slabs shall be painted with Rustoleum protective compound before installation, touched up and sealed to exclude water entering conduit after installation.

C. During construction ends of conduit shall be tightly plugged to exclude dirt, dust and moisture.

D. Ends of conduit entering boxes shall be equipped with galvanized locknuts and bushings. Cut ends of conduit shall be reamed free of burrs and sharp edges.

E. Electrical metallic tubing couplings and terminations in outlet boxes, junction boxes, panelboard cabinets, etc., shall be secured thereto for grounding by means of raintight and concrete-tight fittings of the interlocking compression ring or stainless steel, multiple joint locking type. Set screws or indentations will not be acceptable as a method of attachment of fittings to conduit or EMT.

3.04 WIRING

A. Joints in wiring shall be made with approved type solderless connectors.

3.05 WIRE

A. Wire #8 and larger shall be stranded and no wire less than #12 shall be used, unless otherwise noted.

3.06 GROUNDING SYSTEM

A. Framework of the panels shall be grounded by a ground loop or buss to receive a building ground connection.

B. No ground wire shall be spliced, except as approved; where necessary to tap or splice a ground wire cable or loop, Cadweld copper weld splice or tap shall be used. Cable ground connection shall be solderless, non-corrosive, cast lug type. Ground clamps shall be non-corrosive cast brass or bronze.

C. Exposed non-current carrying conductive material enclosing electrical equipment or forming a part of such equipment shall be bonded together in a positive continuous raceway and equipment ground. A bonding jumper shall be provided where continuity of ground may be doubtful because of oversize locknuts or loose jointed connections or in any instance where in the opinion of the Engineer the continuity of ground is doubtful.

D. Seal-tite for power connections shall be equipped with ground connections and internal ground wire.

E. This Contractor shall install a fifth wire to be the ground conductor in feeder runs to meet requirements of the National Electrical Code.

F. Ground fault protection shall be installed for temporary and permanent power to meet OSHA requirements and those of the National Electrical Code.

3.07 INSPECTIONS

A. The Contractor shall contact the City to arrange for inspections prior to filling any electrical trenches.

3.08 UNDERGROUND RACEWAYS

A. Underground raceways shall be supported with plastic spacers every five (5') feet.

3.09 INSTRUCTIONS TO OWNER

A. It shall be the responsibility of the Electrical Foreman to instruct the Owner in the function, operation and maintenance of electrical systems and equipment.

3.10 CLEANUP

A. Panels and like shall be cleaned and left in a neat manner and where required shall be painted if any finish material has been removed.

Appendix A

Massachusetts Department of Environmental Protection
Bureau of Resource Protection - Wetlands

WPA Form 5 – Order of Conditions

Massachusetts Wetlands Protection Act M.G.L. c. 131, §40

Provided by MassDEP:
316-0718
MassDEP File #

eDEP Transaction #

Waltham
City/Town

A. General Information

Please note: this form has been modified with added space to accommodate the Registry of Deeds Requirements

Important: When filling out forms on the computer, use only the tab key to move your cursor - do not use the return key.

1. From: Waltham
Conservation Commission

2. This issuance is for (check one): a. ☒ Order of Conditions b. ☐ Amended Order of Conditions

3. To: Applicant:

Sandra — a. First Name
Tomasello — b. Last Name
City of Waltham Recreation Dept. — c. Organization
510 Moody Street — d. Mailing Address
Waltham — e. City/Town
MA — f. State
02453 — g. Zip Code

4. Property Owner (if different from applicant):

a. First Name
b. Last Name
c. Organization
d. Mailing Address
e. City/Town
f. State
g. Zip Code

5. Project Location:

385 Trapelo Road — a. Street Address
Waltham — b. City/Town
R036 — c. Assessors Map/Plat Number
001/0001,002A — d. Parcel/Lot Number

Latitude and Longitude, if known: 42d385917m s — d. Latitude; 71d18443m s — e. Longitude

A. General Information (cont.)

6. Property recorded at the Registry of Deeds for (attach additional information if more than one parcel):

a. County | b. Certificate Number (if registered land)

c. Book | d. Page

7. Dates: 08-03-2016 (a. Date Notice of Intent Filed) | 09-22-2016 (b. Date Public Hearing Closed) | 10-06-2016 (c. Date of Issuance)

8. Final Approved Plans and Other Documents (attach additional plan or document references as needed):

Site Plans - L401 and L402
a. Plan Title

Marshall/Gary LLC
b. Prepared By

Ben Gary, RLA
c. Signed and Stamped by

08-01-2016
d. Final Revision Date

1"=20'
e. Scale

Existing Conditions Plans (Survey) 1 of 2 and 2 of 2
f. Additional Plan or Document Title

09-09-2014
g. Date

B. Findings

1. Findings pursuant to the Massachusetts Wetlands Protection Act:

Following the review of the above-referenced Notice of Intent and based on the information provided in this application and presented at the public hearing, this Commission finds that the areas in which work is proposed is significant to the following interests of the Wetlands Protection Act (the Act). Check all that apply:

a. ☐ Public Water Supply
b. ☐ Land Containing Shellfish
c. ☐ Prevention of Pollution
d. ☐ Private Water Supply
e. ☐ Fisheries
f. ☐ Protection of Wildlife Habitat
g. ☒ Groundwater Supply
h. ☒ Storm Damage Prevention
i. ☒ Flood Control

2. This Commission hereby finds the project, as proposed, is: (check one of the following boxes)

Approved subject to:

a. ☒ the following conditions which are necessary in accordance with the performance standards set forth in the wetlands regulations. This Commission orders that all work shall be performed in accordance with the Notice of Intent referenced above, the following General Conditions, and any other special conditions attached to this Order. To the extent that the following conditions modify or differ from the plans, specifications, or other proposals submitted with the Notice of Intent, these conditions shall control.

B. Findings (cont.)

Denied because:

b. ☐ the proposed work cannot be conditioned to meet the performance standards set forth in the wetland regulations. Therefore, work on this project may not go forward unless and until a new Notice of Intent is submitted which provides measures which are adequate to protect the interests of the Act, and a final Order of Conditions is issued. **A description of the performance standards which the proposed work cannot meet is attached to this Order.**

c. ☐ the information submitted by the applicant is not sufficient to describe the site, the work, or the effect of the work on the interests identified in the Wetlands Protection Act. Therefore, work on this project may not go forward unless and until a revised Notice of Intent is submitted which provides sufficient information and includes measures which are adequate to protect the Act's interests, and a final Order of Conditions is issued. **A description of the specific information which is lacking and why it is necessary is attached to this Order as per 310 CMR 10.05(6)(c).**

3. ☒ Buffer Zone Impacts: Shortest distance between limit of project disturbance and the wetland resource area specified in 310 CMR 10.02(1)(a) _____ a. linear feet

Inland Resource Area Impacts: Check all that apply below. (For Approvals Only)

Resource Area	Proposed Alteration	Permitted Alteration	Proposed Replacement	Permitted Replacement
4. ☐ Bank	a. linear feet	b. linear feet	c. linear feet	d. linear feet
5. ☐ Bordering Vegetated Wetland	a. square feet	b. square feet	c. square feet	d. square feet
6. ☐ Land Under Waterbodies and Waterways	a. square feet	b. square feet	c. square feet	d. square feet
	e. c/y dredged	f. c/y dredged		
7. ☐ Bordering Land Subject to Flooding	a. square feet	b. square feet	c. square feet	d. square feet
Cubic Feet Flood Storage	e. cubic feet	f. cubic feet	g. cubic feet	h. cubic feet
8. ☐ Isolated Land Subject to Flooding	a. square feet	b. square feet		
Cubic Feet Flood Storage	c. cubic feet	d. cubic feet	e. cubic feet	f. cubic feet
9. ☐ Riverfront Area	a. total sq. feet	b. total sq. feet		
Sq ft within 100 ft	c. square feet	d. square feet	e. square feet	f. square feet
Sq ft between 100-200 ft	g. square feet	h. square feet	i. square feet	j. square feet

B. Findings (cont.)

Coastal Resource Area Impacts: Check all that apply below. (For Approvals Only)

	Proposed Alteration	Permitted Alteration	Proposed Replacement	Permitted Replacement
10. ☐ Designated Port Areas	Indicate size under Land Under the Ocean, below			
11. ☐ Land Under the Ocean	a. square feet	b. square feet		
	c. c/y dredged	d. c/y dredged		
12. ☐ Barrier Beaches	Indicate size under Coastal Beaches and/or Coastal Dunes below			
13. ☐ Coastal Beaches	a. square feet	b. square feet	c. cu yd nourishment	d. cu yd nourishment
14. ☐ Coastal Dunes	a. square feet	b. square feet	c. cu yd nourishment	d. cu yd nourishment
15. ☐ Coastal Banks	a. linear feet	b. linear feet		
16. ☐ Rocky Intertidal Shores	a. square feet	b. square feet		
17. ☐ Salt Marshes	a. square feet	b. square feet	c. square feet	d. square feet
18. ☐ Land Under Salt Ponds	a. square feet	b. square feet		
	c. c/y dredged	d. c/y dredged		
19. ☐ Land Containing Shellfish	a. square feet	b. square feet	c. square feet	d. square feet
20. ☐ Fish Runs	Indicate size under Coastal Banks, Inland Bank, Land Under the Ocean, and/or inland Land Under Waterbodies and Waterways, above			
	a. c/y dredged	b. c/y dredged		
21. ☐ Land Subject to Coastal Storm Flowage	a. square feet	b. square feet		
22. ☐ Riverfront Area	a. total sq. feet	b. total sq. feet		
Sq ft within 100 ft	c. square feet	d. square feet	e. square feet	f. square feet
Sq ft between 100-200 ft	g. square feet	h. square feet	i. square feet	j. square feet

B. Findings (cont.)

* #23. If the project is for the purpose of restoring or enhancing a wetland resource area in addition to the square footage that has been entered in Section B.5.c (BVW) or B.17.c (Salt Marsh) above, please enter the additional amount here.

23. ☐ Restoration/Enhancement *:

a. square feet of BVW _____ b. square feet of salt marsh _____

24. ☐ Stream Crossing(s):

a. number of new stream crossings _____ b. number of replacement stream crossings _____

C. General Conditions Under Massachusetts Wetlands Protection Act

The following conditions are only applicable to Approved projects.

1. Failure to comply with all conditions stated herein, and with all related statutes and other regulatory measures, shall be deemed cause to revoke or modify this Order.
2. The Order does not grant any property rights or any exclusive privileges; it does not authorize any injury to private property or invasion of private rights.
3. This Order does not relieve the permittee or any other person of the necessity of complying with all other applicable federal, state, or local statutes, ordinances, bylaws, or regulations.
4. The work authorized hereunder shall be completed within three years from the date of this Order unless either of the following apply:
   a. The work is a maintenance dredging project as provided for in the Act; or
   b. The time for completion has been extended to a specified date more than three years, but less than five years, from the date of issuance. If this Order is intended to be valid for more than three years, the extension date and the special circumstances warranting the extended time period are set forth as a special condition in this Order.
   c. If the work is for a Test Project, this Order of Conditions shall be valid for no more than one year.
5. This Order may be extended by the issuing authority for one or more periods of up to three years each upon application to the issuing authority at least 30 days prior to the expiration date of the Order. An Order of Conditions for a Test Project may be extended for one additional year only upon written application by the applicant, subject to the provisions of 310 CMR 10.05(11)(f).
6. If this Order constitutes an Amended Order of Conditions, this Amended Order of Conditions does not extend the issuance date of the original Final Order of Conditions and the Order will expire on _____ unless extended in writing by the Department.
7. Any fill used in connection with this project shall be clean fill. Any fill shall contain no trash, refuse, rubbish, or debris, including but not limited to lumber, bricks, plaster, wire, lath, paper, cardboard, pipe, tires, ashes, refrigerators, motor vehicles, or parts of any of the foregoing.

C. General Conditions Under Massachusetts Wetlands Protection Act

8. This Order is not final until all administrative appeal periods from this Order have elapsed, or if such an appeal has been taken, until all proceedings before the Department have been completed.

9. No work shall be undertaken until the Order has become final and then has been recorded in the Registry of Deeds or the Land Court for the district in which the land is located, within the chain of title of the affected property. In the case of recorded land, the Final Order shall also be noted in the Registry's Grantor Index under the name of the owner of the land upon which the proposed work is to be done. In the case of the registered land, the Final Order shall also be noted on the Land Court Certificate of Title of the owner of the land upon which the proposed work is done. The recording information shall be submitted to the Conservation Commission on the form at the end of this Order, which form must be stamped by the Registry of Deeds, prior to the commencement of work.

10. A sign shall be displayed at the site not less then two square feet or more than three square feet in size bearing the words,

    "Massachusetts Department of Environmental Protection" [or, "MassDEP"]

    "File Number 316-0718 "

11. Where the Department of Environmental Protection is requested to issue a Superseding Order, the Conservation Commission shall be a party to all agency proceedings and hearings before MassDEP.

12. Upon completion of the work described herein, the applicant shall submit a Request for Certificate of Compliance (WPA Form 8A) to the Conservation Commission.

13. The work shall conform to the plans and special conditions referenced in this order.

14. Any change to the plans identified in Condition #13 above shall require the applicant to inquire of the Conservation Commission in writing whether the change is significant enough to require the filing of a new Notice of Intent.

15. The Agent or members of the Conservation Commission and the Department of Environmental Protection shall have the right to enter and inspect the area subject to this Order at reasonable hours to evaluate compliance with the conditions stated in this Order, and may require the submittal of any data deemed necessary by the Conservation Commission or Department for that evaluation.

16. This Order of Conditions shall apply to any successor in interest or successor in control of the property subject to this Order and to any contractor or other person performing work conditioned by this Order.

C. General Conditions Under Massachusetts Wetlands Protection Act (cont.)

17. Prior to the start of work, and if the project involves work adjacent to a Bordering Vegetated Wetland, the boundary of the wetland in the vicinity of the proposed work area shall be marked by wooden stakes or flagging. Once in place, the wetland boundary markers shall be maintained until a Certificate of Compliance has been issued by the Conservation Commission.

18. All sedimentation barriers shall be maintained in good repair until all disturbed areas have been fully stabilized with vegetation or other means. At no time shall sediments be deposited in a wetland or water body. During construction, the applicant or his/her designee shall inspect the erosion controls on a daily basis and shall remove accumulated sediments as needed. The applicant shall immediately control any erosion problems that occur at the site and shall also immediately notify the Conservation Commission, which reserves the right to require additional erosion and/or damage prevention controls it may deem necessary. Sedimentation barriers shall serve as the limit of work unless another limit of work line has been approved by this Order.

19. The work associated with this Order (the "Project")
    (1) ☒ is subject to the Massachusetts Stormwater Standards
    (2) ☐ is NOT subject to the Massachusetts Stormwater Standards

    If the work is subject to the Stormwater Standards, then the project is subject to the following conditions:

    a) All work, including site preparation, land disturbance, construction and redevelopment, shall be implemented in accordance with the construction period pollution prevention and erosion and sedimentation control plan and, if applicable, the Stormwater Pollution Prevention Plan required by the National Pollution Discharge Elimination System Construction General Permit as required by Stormwater Condition 8. Construction period erosion, sedimentation and pollution control measures and best management practices (BMPs) shall remain in place until the site is fully stabilized.

    b) No stormwater runoff may be discharged to the post-construction stormwater BMPs unless and until a Registered Professional Engineer provides a Certification that:
    i. all construction period BMPs have been removed or will be removed by a date certain specified in the Certification. For any construction period BMPs intended to be converted to post construction operation for stormwater attenuation, recharge, and/or treatment, the conversion is allowed by the MassDEP Stormwater Handbook BMP specifications and that the BMP has been properly cleaned or prepared for post construction operation, including removal of all construction period sediment trapped in inlet and outlet control structures;
    ii. as-built final construction BMP plans are included, signed and stamped by a Registered Professional Engineer, certifying the site is fully stabilized;
    iii. any illicit discharges to the stormwater management system have been removed, as per the requirements of Stormwater Standard 10;

C. General Conditions Under Massachusetts Wetlands Protection Act (cont.)

iv. all post-construction stormwater BMPs are installed in accordance with the plans (including all planting plans) approved by the issuing authority, and have been inspected to ensure that they are not damaged and that they are in proper working condition;

v. any vegetation associated with post-construction BMPs is suitably established to withstand erosion.

c) The landowner is responsible for BMP maintenance until the issuing authority is notified that another party has legally assumed responsibility for BMP maintenance. Prior to requesting a Certificate of Compliance, or Partial Certificate of Compliance, the responsible party (defined in General Condition 18(e)) shall execute and submit to the issuing authority an Operation and Maintenance Compliance Statement ("O&M Statement) for the Stormwater BMPs identifying the party responsible for implementing the stormwater BMP Operation and Maintenance Plan ("O&M Plan") and certifying the following:

i.) the O&M Plan is complete and will be implemented upon receipt of the Certificate of Compliance, and

ii.) the future responsible parties shall be notified in writing of their ongoing legal responsibility to operate and maintain the stormwater management BMPs and implement the Stormwater Pollution Prevention Plan.

d) Post-construction pollution prevention and source control shall be implemented in accordance with the long-term pollution prevention plan section of the approved Stormwater Report and, if applicable, the Stormwater Pollution Prevention Plan required by the National Pollution Discharge Elimination System Multi-Sector General Permit.

e) Unless and until another party accepts responsibility, the landowner, or owner of any drainage easement, assumes responsibility for maintaining each BMP. To overcome this presumption, the landowner of the property must submit to the issuing authority a legally binding agreement of record, acceptable to the issuing authority, evidencing that another entity has accepted responsibility for maintaining the BMP, and that the proposed responsible party shall be treated as a permittee for purposes of implementing the requirements of Conditions 18(f) through 18(k) with respect to that BMP. Any failure of the proposed responsible party to implement the requirements of Conditions 18(f) through 18(k) with respect to that BMP shall be a violation of the Order of Conditions or Certificate of Compliance. In the case of stormwater BMPs that are serving more than one lot, the legally binding agreement shall also identify the lots that will be serviced by the stormwater BMPs. A plan and easement deed that grants the responsible party access to perform the required operation and maintenance must be submitted along with the legally binding agreement.

f) The responsible party shall operate and maintain all stormwater BMPs in accordance with the design plans, the O&M Plan, and the requirements of the Massachusetts Stormwater Handbook.

C. General Conditions Under Massachusetts Wetlands Protection Act (cont.)

g) The responsible party shall:
1. Maintain an operation and maintenance log for the last three (3) consecutive calendar years of inspections, repairs, maintenance and/or replacement of the stormwater management system or any part thereof, and disposal (for disposal the log shall indicate the type of material and the disposal location);
2. Make the maintenance log available to MassDEP and the Conservation Commission ("Commission") upon request; and
3. Allow members and agents of the MassDEP and the Commission to enter and inspect the site to evaluate and ensure that the responsible party is in compliance with the requirements for each BMP established in the O&M Plan approved by the issuing authority.

h) All sediment or other contaminants removed from stormwater BMPs shall be disposed of in accordance with all applicable federal, state, and local laws and regulations.

i) Illicit discharges to the stormwater management system as defined in 310 CMR 10.04 are prohibited.

j) The stormwater management system approved in the Order of Conditions shall not be changed without the prior written approval of the issuing authority.

k) Areas designated as qualifying pervious areas for the purpose of the Low Impact Site Design Credit (as defined in the MassDEP Stormwater Handbook, Volume 3, Chapter 1, Low Impact Development Site Design Credits) shall not be altered without the prior written approval of the issuing authority.

l) Access for maintenance, repair, and/or replacement of BMPs shall not be withheld. Any fencing constructed around stormwater BMPs shall include access gates and shall be at least six inches above grade to allow for wildlife passage.

Special Conditions (if you need more space for additional conditions, please attach a text document):
See attached.

20. For Test Projects subject to 310 CMR 10.05(11), the applicant shall also implement the monitoring plan and the restoration plan submitted with the Notice of Intent. If the conservation commission or Department determines that the Test Project threatens the public health, safety or the environment, the applicant shall implement the removal plan submitted with the Notice of Intent or modify the project as directed by the conservation commission or the Department.

D. Findings Under Municipal Wetlands Bylaw or Ordinance

1. Is a municipal wetlands bylaw or ordinance applicable? ☐ Yes ☒ No
2. The _____ hereby finds (check one that applies):
   Conservation Commission
   a. ☐ that the proposed work cannot be conditioned to meet the standards set forth in a municipal ordinance or bylaw, specifically:

      _____ _____
      1. Municipal Ordinance or Bylaw 2. Citation

      Therefore, work on this project may not go forward unless and until a revised Notice of Intent is submitted which provides measures which are adequate to meet these standards, and a final Order of Conditions is issued.

   b. ☐ that the following additional conditions are necessary to comply with a municipal ordinance or bylaw:

      _____ _____
      1. Municipal Ordinance or Bylaw 2. Citation
3. The Commission orders that all work shall be performed in accordance with the following conditions and with the Notice of Intent referenced above. To the extent that the following conditions modify or differ from the plans, specifications, or other proposals submitted with the Notice of Intent, the conditions shall control.
   The special conditions relating to municipal ordinance or bylaw are as follows (if you need more space for additional conditions, attach a text document):

   _____

   _____

   _____

   _____

E. Signatures

This Order is valid for three years, unless otherwise specified as a special condition pursuant to General Conditions #4, from the date of issuance.

10-6-2016
1. Date of Issuance

Please indicate the number of members who will sign this form.
This Order must be signed by a majority of the Conservation Commission.

5
2. Number of Signers

The Order must be mailed by certified mail (return receipt requested) or hand delivered to the applicant. A copy also must be mailed or hand delivered at the same time to the appropriate Department of Environmental Protection Regional Office, if not filing electronically, and the property owner, if different from applicant.

Signatures:

☐ by hand delivery on

Date

☒ by certified mail, return receipt requested, on 10-6-2016

Date

F. Appeals

The applicant, the owner, any person aggrieved by this Order, any owner of land abutting the land subject to this Order, or any ten residents of the city or town in which such land is located, are hereby notified of their right to request the appropriate MassDEP Regional Office to issue a Superseding Order of Conditions. The request must be made by certified mail or hand delivery to the Department, with the appropriate filing fee and a completed Request for Departmental Action Fee Transmittal Form, as provided in 310 CMR 10.03(7) within ten business days from the date of issuance of this Order. A copy of the request shall at the same time be sent by certified mail or hand delivery to the Conservation Commission and to the applicant, if he/she is not the appellant.

Any appellants seeking to appeal the Department's Superseding Order associated with this appeal will be required to demonstrate prior participation in the review of this project. Previous participation in the permit proceeding means the submission of written information to the Conservation Commission prior to the close of the public hearing, requesting a Superseding Order, or providing written information to the Department prior to issuance of a Superseding Order.

The request shall state clearly and concisely the objections to the Order which is being appealed and how the Order does not contribute to the protection of the interests identified in the Massachusetts Wetlands Protection Act (M.G.L. c. 131, § 40), and is inconsistent with the wetlands regulations (310 CMR 10.00). To the extent that the Order is based on a municipal ordinance or bylaw, and not on the Massachusetts Wetlands Protection Act or regulations, the Department has no appellate jurisdiction.

G. Recording Information

Prior to commencement of work, this Order of Conditions must be recorded in the Registry of Deeds or the Land Court for the district in which the land is located, within the chain of title of the affected property. In the case of recorded land, the Final Order shall also be noted in the Registry's Grantor Index under the name of the owner of the land subject to the Order. In the case of registered land, this Order shall also be noted on the Land Court Certificate of Title of the owner of the land subject to the Order of Conditions. The recording information on this page shall be submitted to the Conservation Commission listed below.

Waltham
Conservation Commission

Detach on dotted line, have stamped by the Registry of Deeds and submit to the Conservation Commission.

To:

Waltham
Conservation Commission

Please be advised that the Order of Conditions for the Project at:

385 Trapelo Road — Project Location
316-0718 — MassDEP File Number

Has been recorded at the Registry of Deeds of:

County ____ Book ____ Page ____

for: Property Owner ____

and has been noted in the chain of title of the affected property in:

Book ____ Page ____

In accordance with the Order of Conditions issued on:

Date ____

If recorded land, the instrument number identifying this transaction is:

Instrument Number ____

If registered land, the document number identifying this transaction is:

Document Number ____

Signature of Applicant ____

Waltham Conservation Commission
119 School Street
Waltham, MA 02451-4596

SPECIAL ORDERS OF CONDITIONS (V1.2)
AS ISSUED BY THE WALTHAM CONSERVATION COMMISSION

DEP File Number: 316-0718
Applicant: City of Waltham Recreation Department
Location: Elsie Turner Field, 385 Trapelo Road
Date of Issuance: October 6, 2016

19. RECORDING AND ADMINISTRATION

A. Prior to any work on the site, or within six (6) weeks of the date of this Order, whichever comes first, this Order of Conditions shall be recorded at the Middlesex Registry of Deeds or Land Court and notice filed with the Commission pursuant to Condition 8. Failure to do so shall be deemed cause to revoke this Order.

B. In advance of any work on this project the applicant shall notify the Commission, and at the request of the Commission, shall arrange an on-site conference among the Commission, the contractor and the applicant to ensure that all of the conditions of this Order are understood.

C. This Order shall be made a part of all contracts and subcontracts dealing with the work proposed, and shall supersede all other conflicting contract requirements.

D. This Order shall apply to and be binding upon the applicant, its employees and all successors and assigns in interest or control.

E. Prior to any work being done on the project site, the applicant shall inform the Waltham Conservation Commission in writing of the names, addresses, business and home phone numbers of both the project supervisor who will be responsible for ensuring on-site compliance with this order and his/her alternate. The applicant shall also notify the Commission in writing of any changes in this information.

F. Members of the Commission or their agents shall have the right to enter upon and inspect the premises to evaluate compliance with this Order of Conditions.

G. Any changes differing from the aforementioned conditions must be submitted to the Commission for approval prior to their implementation. If the Commission finds, by

majority vote, said changes to be significant and/or deviate from the original plans, Notice of Intent, or the Order of Conditions, then the Commission may require a new Notice of Intent or call for another public hearing within 21 days, at the expense of the applicant, in order to take testimony from all interested parties. Within 21 days of the close of said public hearing, the Commission will issue an amended or new Order of Conditions.

H. Any errors found in the plans or information submitted by the applicant shall be considered as changes, and the procedures outlined in Condition "G" above shall be followed.

I. In conjunction with the sale of any portion of the site covered by this Order of Conditions, the applicant shall submit to the Commission a signed statement by the buyer that he/she is aware of outstanding Orders of Conditions.

J. The Commission may authorize its designated agent to act on its behalf in determining preconstruction compliance.

K. Special Conditions 21B, 22G, 23A, 23B, 23C, 23D, and 23E shall apply in perpetuity and shall not expire with the issuance of a Certificate of Compliance for this project.

20. PRIOR TO COMMENCEMENT OF WORK

A. Prior to any work on the project site, the proposed limit of work shall be clearly marked with stakes, flags or fencing and shall be approved in writing by the Commission. Such markers will be maintained until all construction on the site's perimeter is complete. All workers shall be informed that no construction activity is to occur beyond this line at any time.

B. Prior to any work on the project site, all trees greater than six (6) inches in diameter that are to be saved shall be protected from inadvertent damage by strapping boards around the trunk from ground level to a height of at least eight (8) feet. Completion of this project measure shall be approved in writing by the Commission. Such measures shall be maintained until all earthwork and grading is complete and then shall be removed. Trees that are not to be saved shall be cut and stumps removed.

C. Prior to any construction on the site, an erosion control barrier of a filter fabric fence backed by a row of double-staked straw bales shall be placed between all construction activities and wetland areas, in accordance with Erosion and Sedimentation Guidelines for Urban and Suburban Areas, Mass. DEP, March 1997. This barrier shall be inspected and approved in writing by the Commission. Upon completion of the project the applicant shall remove and discard to a suitable area, all straw bales and other materials determined to be detrimental to the resource areas.

D. The applicant shall have on hand at the start of any soil disturbance, removal or stockpiling, a minimum of 20% additional straw bales, in good condition and sufficient stakes for double staking these bales. Said bales shall be used only for the control of

emergency erosion problems and shall not be used for the normal control of erosion, as described in Condition "C".

21. LIMITS OF WORK/EROSION CONTROL

A. There shall be no activity (i.e. filling, alteration, regrading, removal of vegetation, etc.) related to this project within 50 feet of any resource area unless otherwise described in these orders and on the referenced plans.

B. As soon as possible during construction, all disturbed upland areas in the resource area or buffer zone shall be brought to final finished grade and stabilized permanently against erosion. This shall be done either by sodding, or by loaming, seeding, and mulching according to Natural Resources Conservation Service (formerly UDA) Soil Conservation Service Guidelines. If the latter course is chosen, stabilization will be considered completed once the surface shows complete vegetative cover. Bare ground that can not be permanently stabilized within thirty (30) days shall be stabilized by temporary measures.

22. DURING WORK

A. Accepted engineering and construction standards and procedures shall be followed in the completion of this project.

B. A copy of this Order of Conditions, as well as all construction and wetland replication plans, shall be on site upon commencement of any site work and made available to any person doing work on the site.

C. Site grading and construction shall be scheduled to avoid periods of high water. Once begun, grading and construction shall move uninterrupted to completion to avoid erosion and sedimentation of wetlands.

D. Any dewatering or drawdown activities on the project in which water will be released into a resource area or storm drain shall make use of a sedimentation tank or similar device to remove sediment before the water is released.

E. No earthen embankment in the buffer zone shall have a post construction slope steeper than 2:1.

F. There shall be no stockpiling of soil or other materials within fifty (50) feet of any resource area, except as described in the NOI and shown on the referenced plan.

G. During and after work on this project, there shall be no discharge or spillage of fuel, oil, or other pollutants into any resource area or buffer zone. The applicant shall take all reasonable precautions to prevent the release of pollutants by ignorance, accident, or vandalism.

23. UPON COMPLETION OF WORK

A. Storage of Petroleum Products

i. No underground storage of fuel oils shall be allowed within the resource area or buffer zone.

ii. There shall be no storage of petroleum products (e.g. motor oil, gasoline, diesel fuel, etc.) within the resource area or buffer zone on the site at any time, except for quantities commensurate with maintaining a multi-family unit.

B. Fertilizer, Pesticides and Herbicides

i. Fertilizers shall not be used within a resource area or fifty (50) feet from a resource area.

ii. Pesticides and herbicides shall not be used within a resource area or buffer zone.

C. Sodium chloride shall not be used for de-icing on the site. Signs of a minimum of two square feet stating such restriction shall be posted at all vehicle entrances.

D. Sand used in deicing shall be removed periodically during the winter and by May 1st of each year. Records of cleaning shall be maintained on site and mailed annually to the Commission by May 1st.

E. The storm drainage system shall be equipped with gas and oil traps. Catch basins shall be cleaned and maintained by the applicant every 3 months. Records of said cleaning shall be maintained on site and mailed annually to the Commission by May 1st.

24. SITE-SPECIFIC CONDITIONS

A. Applicant shall have a swale created along the high side of the parking lot outside the walkway. The swale will be connected hydraulically that conveys water to drain from the high side of the parking lot into the wetlands and eliminates any water that may travel over the pavement.

B. The revised plan shall be shown to all of the necessary City of Waltham departments for approval. It will then be presented to the Conservation Commission for approval.

Construction Documents

Improvements to Graverson Playground

16 PINE VALE ROAD
WALTHAM, MASSACHUSETTS 02451

GRAVERSON PLAYGROUND
16 Pine Vale Road

Locus Plan

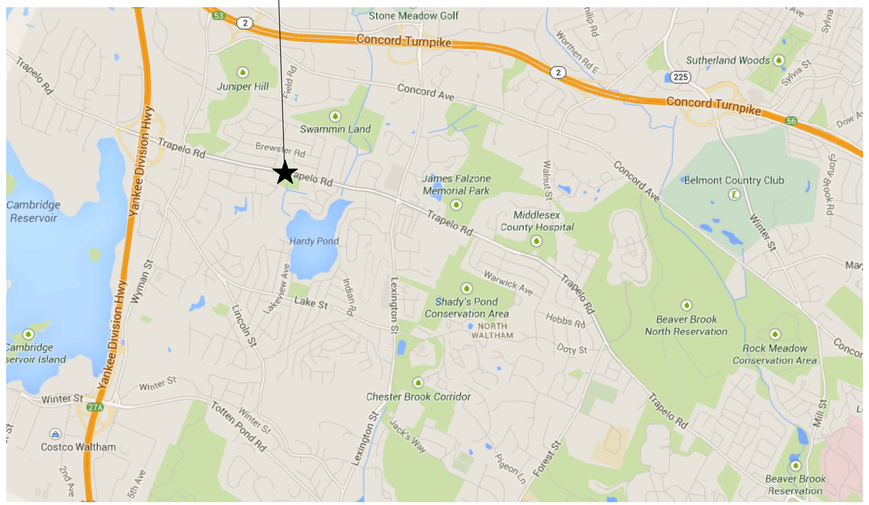

MAYOR JEANNETTE A. McCARTHY
CITY OF WALTHAM

CITY OF WALTHAM RECREATION DEPARTMENT
510 MOODY STREET
WALTHAM, MASSACHUSETTS 02453

OCTOBER 31, 2017

LANDSCAPE ARCHITECT:
CAROLYN COONEY & ASSOCIATES
13 ELM STREET
MILFORD, MASSACHUSETTS 01757
TEL: (508) 478-8426
FAX: (508) 478-8607

SUBCONSULTANTS:

WILLIAMS & SPARAGES, LLC
CIVIL ENGINEERS
189 NORTH MAIN STREET
MIDDLETON, MA 01949
(978) 539-8088

SITE ENGINEERING CONSULTANTS, INC.
CONSULTING CIVIL ENGINEERS
55 GRAPE SHOT ROAD
SHARON, MASSACHUSETTS 02067
TEL: (781) 784-0326

Survey
GREEN INTERNATIONAL AFFILIATES, iNC.
CIVIL & STRUCTURAL ENGINEERS
WESTFORD, MA

SHEPARD ENGINEERING, INC.
ELECTRICAL CONSULTANTS
1308 GRAFTON STREET
WORCESTER, MA 01604
(508) 757-7793

Supplemental Survey
ALPHA SURVEYING & ENGINEERING, INC.
695 WAREHAM STREET
MIDDLEBOROUGH, MA 02346
(508) 295-5505

Index of Drawings

SHT 1 OF 2	EXISTING CONDITIONS PLAN
SHT 2 OF 2	EXISTING CONDITIONS PLAN
L.101A, L.102A	SITE PREPARATION: TEMPORARY CONTROLS
L.101, L.102	SITE PREPARATION & DEMOLITION
L.201, L.202	MATERIALS PLAN
L.301, L.302	LAYOUT PLAN
L.401, L.402	GRADING & DRAINAGE PLAN
L.451, L.452	UTILITY COORDINATION PLAN
L.501, L.502	PLANTING PLAN
L.601	SITE PREPARATION DETAILS
L.602	PAVING & CURB DETAILS
L.603	CHAIN LINK FENCE DETAILS
L.604	BACKSTOP DETAILS
L.605	GUARDRAIL/GATE DETAILS
L.606	WELDED WIRE FENCE DETAILS
L.607	WELDED WIRE FENCE PANEL LAYOUT
L.608	PLAY AREA CURB/FENCE LAYOUT
L.609	PLAY AREA EQUIPMENT LAYOUT
L.610	PLAY EQUIPMENT FOOTINGS 1
L.611	PLAY EQUIPMENT FOOTINGS 2
L.612	PLAY EQUIPMENT FTGS & TENNIS NET DETAILS
L.613	TENNIS & BASKETBALL COURT DETAILS
L.614	BOCCE COURT DETAILS
L.615	SITE FURNITURE DETAILS 1
L.616	SITE FURNITURE DETAILS 2
L.617	SHADE SHELTER DETAILS
L.618	SIGNAGE, STRIPING & ADA DETAILS
L.619	PLANTING DETAILS
L.620	SPRAY AREA ENLARGEMENT PLAN
L.620A	SPRAY AREA UTILITIES PLAN
L.621	SPRAY AREA DETAILS 1
L.622	SPRAY AREA DETAILS 2
L.622A	SPRAY AREA DETAILS 3
L.622B	SPRAY AREA DETAILS 4
L.623	SPRAY FEATURE DETAILS 1
L.624	SPRAY FEATURE DETAILS 2
L.625	DRAINAGE DETAILS 1
L.701	IRRIGATION PLAN
L.702	IRRIGATION DETAILS
ES.1, ES.2	ELECTRICAL PLAN & DETAILS
C-1	DRAINAGE DETAILS 2

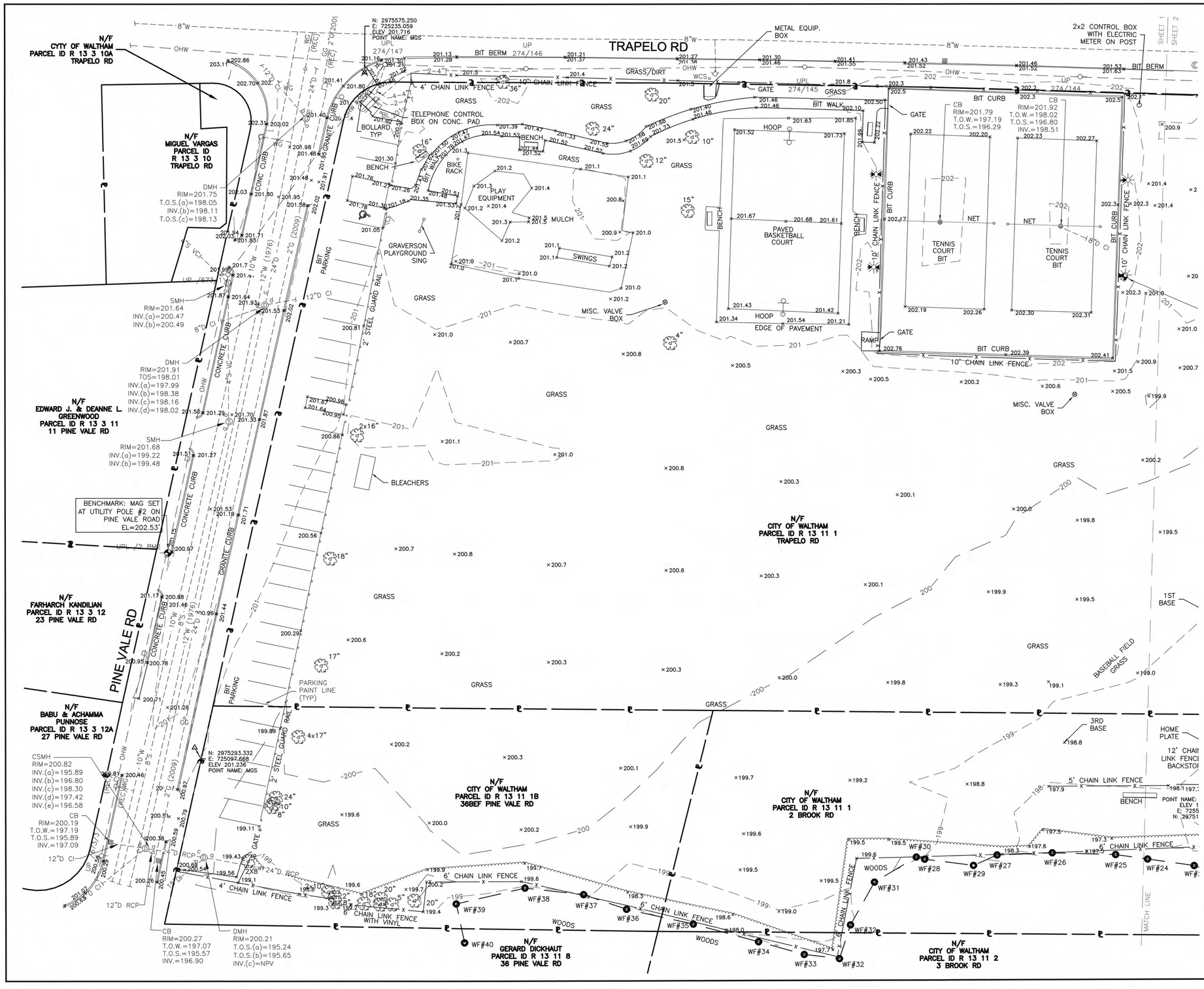

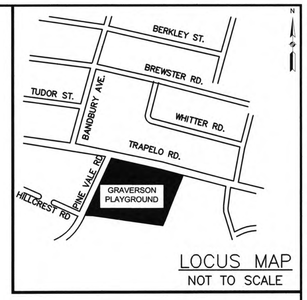

GRAVERSON BASEMAP.DWG Plotted on 19-Mar-2015 9:42 AM

COMMONWEALTH OF MASSACHUSETTS KEVIN D. ARSENAULT No. 45286 PROFESSIONAL LAND SURVEYOR

3/19/15

SEE NOTES AND LEGEND ON SHEET 2.

0 20 50 100

WALTHAM, MASSACHUSETTS

EXISTING CONDITIONS PLAN
GRAVERSON PLAYGROUND

SURVEYED FOR
WESTON & SAMPSON

GREEN INTERNATIONAL AFFILIATES, INC.
CIVIL AND STRUCTURAL ENGINEERS WESTFORD, MASSACHUSETTS

SCALE 1"=20'	DATE 9-9-2014	PROJECT NO. 14028
APPROVED:	DESIGNED BY: . DRAWN BY: NL CHECKED BY: KDA	SHEET NO. 1 OF 2

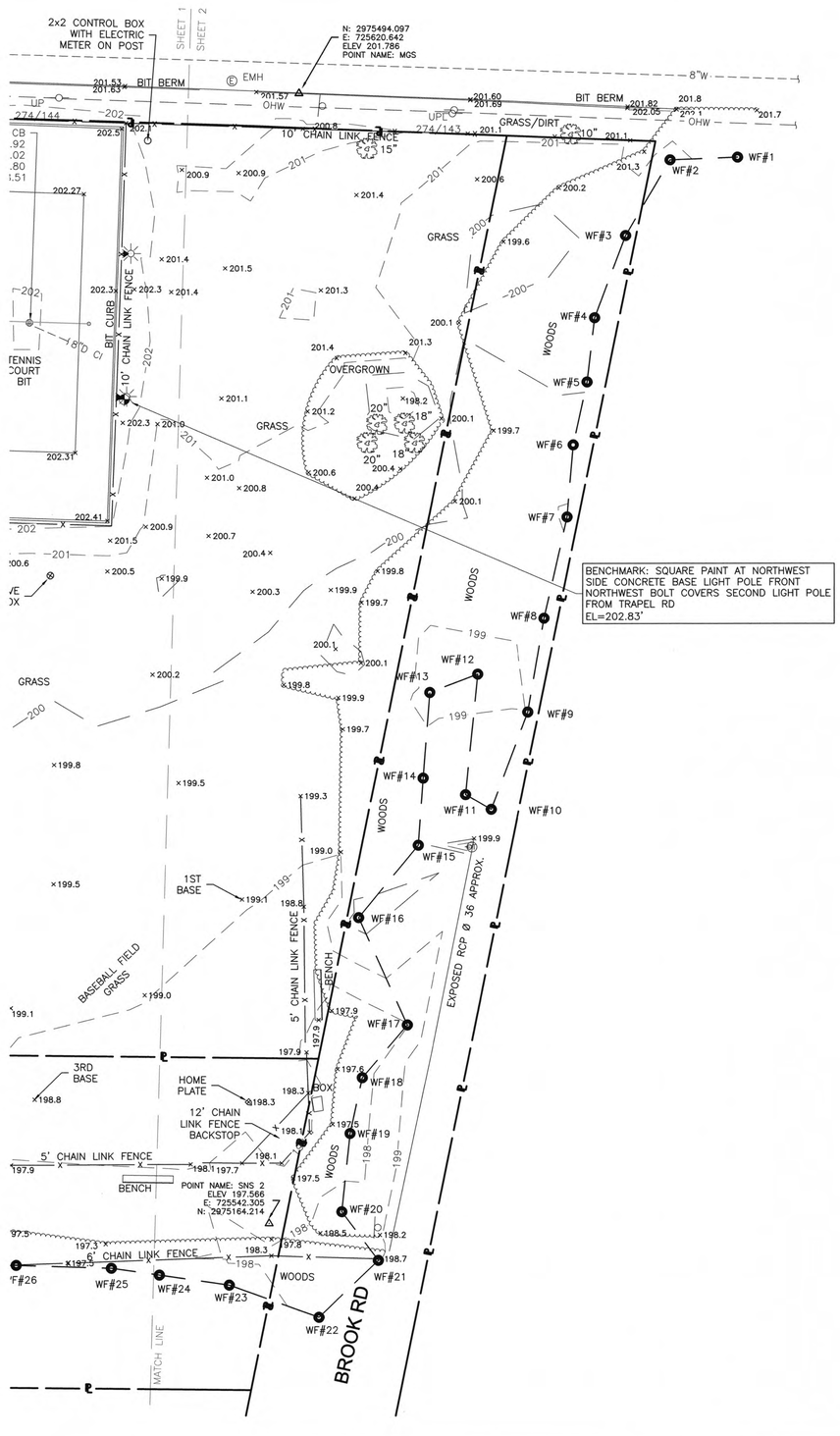

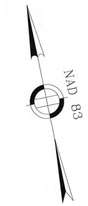

LEGEND (EXISTING)

—E—	ELECTRIC LINE	EMH	ELECTRIC MANHOLE
—W—	WATER LINE	DMH	DRAIN MANHOLE
—D—	DRAIN LINE	SMH	SEWER MANHOLE
—S—	SEWER LINE	6"	6" TREE
—G—	GAS LINE	HYD.	HYDRANT
—T—	TELEPHONE LINE		SIGN
—OHW—	OVERHEAD WIRE		ELECTRIC LIGHT POLE
(REC)	RECORD	×200.7	SPOT ELEVATION
WCS	WATER SHUTOFF		LIGHT
WG	WATER GATE	T.O.S.	TOP OF SEDIMENT
GG	GAS GATE	T.O.W.	TOP OF WATER
	CATCH BASIN		TRAVERSE POINT
	BENCHMARK		TELEPHONE MANHOLE
MB	MAILBOX		WETLAND FLAG
	MISC. GATE	BL	BOLLARD
	PEDESTRIAN TRAFFIC LIGHT		

GENERAL NOTES:

1. THE EXISTING CONDITIONS SHOWN ON THIS BASEMAP ARE THE RESULT AN INSTRUMENT SURVEY PERFORMED ON THE GROUND BY GREEN INTERNATIONAL AFFILIATES, INC. ON JULY 2014.
2. HORIZONTAL DATUM IS MASSACHUSETTS STATE PLANE COORDINATE SYSTEM (NAD83) ESTABLISHED BY GPS METHODS. VERTICAL DATUM IS NAVD 88 ESTABLISHED WITH GPS METHODS.
3. DELINEATED OF WETLANDS BY OTHERS, FLAGS WERE FIELD LOCATED BY GREEN INTERNATIONAL AFFILIATES, INC ON JULY, 2014.
4. ALL PROPERTY LINES SHOWN ON THIS PLAN ARE APPROXIMATE ONLY, OBTAINED FROM THE MASS GIS LEVEL 3 ASSESSORS PARCELS FOR THE CITY OF WALTHAM, FISCAL YEAR 2012.
5. OWNER INFORMATION WAS OBTAINED FROM THE CITY OF WALTHAM PROPERTY ASSESSMENT WEBSITE AS OF SEPTEMBER 9 2014.

UTILITY NOTES:

1. ALL UNDERGROUND UTILITIES AS SHOWN WERE COMPILED USING FIELD SURVEY INFORMATION AND AVAILABLE RECORD INFORMATION.
2. RECORD UTILITY INFORMATION FROM THE VARIOUS UTILITY COMPANIES AND PUBLIC AGENCIES, ARE APPROXIMATE ONLY AND ACTUAL LOCATIONS MUST BE DETERMINED IN THE FIELD.
3. ALL UTILITY COMPANIES, PUBLIC AND PRIVATE MUST BE NOTIFIED, INCLUDING THOSE IN CONTROL OF UTILITIES NOT SHOWN ON THIS PLAN, (SEE CHAPTER 370, ACTS OF 1963, MASSACHUSETTS) PRIOR TO DESIGNING, EXCAVATING, BLASTING, INSTALLING, BACKFILLING, GRADING, PAVEMENT RESTORING OR REPAVING.
4. THE LOCATION OF EXISTING PIPES OR OTHER UNDERGROUND STRUCTURES OR PROPERTY LINES ARE NOT WARRANTED TO BE EXACT, NOR IS IT WARRANTED THAT ALL UNDERGROUND PIPES OR STRUCTURES ARE SHOWN. THE CONTRACTOR SHALL CALL "DIG SAFE" (1-888-344-7233) 72 HOURS (EXCLUDING SATURDAYS, SUNDAYS AND HOLIDAYS) PRIOR TO ANY EXCAVATION TO OBTAIN ACCURATE UTILITY LOCATIONS.
5. SUBSURFACE UTILITY LOCATIONS HAVE BEEN PLOTTED TO MEET UTILITY QUALITY LEVEL "C" AS DESCRIBED IN ASCE STANDARD 38-02 AND SUMMARIZED BELOW. THE UNDERGROUND UTILITIES ARE SHOWN IN APPROXIMATE LOCATIONS BASED ON ABOVE-GROUND FIELD OBSERVATION AND EXISTING RECORD INFORMATION RECEIVED FROM UTILITY STAKE-HOLDERS. UTILITY RECORD PLANS WERE REQUESTED AND RECEIVED FROM THE FOLLOWING UTILITY COMPANIES/AGENCIES/MUNICIPALITIES:
6. INVERTS SHOWN ON PLAN ARE NOT GUARANTEED TO BE ACCURATE. DUE TO THE LIMITATIONS OF FIELD OBSERVATION AND SURVEY TECHNIQUES THE INVERTS ARE SHOWN AS APPROXIMATE ONLY AND SHALL NOT BE WARRANTED TO BE CORRECT. ADDITIONAL FIELD INVESTIGATION IS NECESSARY WHERE ACCURATE MEASUREMENTS ARE REQUIRED FOR DESIGN OF CRITICAL AREAS.
7. THE EXISTING CONDITIONS PLAN IS TO BE USED FOR THE SPECIFIED PROJECT ONLY AND IS NOT WARRANTED TO BE COMPLETE FOR ANY OTHER FUTURE PROJECTS.

0 20 50 100

COMMONWEALTH OF MASSACHUSETTS
KEVIN D. ARSENAULT
No. 45286
PROFESSIONAL LAND SURVEYOR
5/19/15

WALTHAM, MASSACHUSETTS

EXISTING CONDITIONS PLAN
GRAVERSON PLAYGROUND

SURVEYED FOR
WESTON & SAMPSON

GREEN INTERNATIONAL AFFILIATES, INC.
CIVIL AND STRUCTURAL ENGINEERS WESTFORD, MASSACHUSETTS

SCALE 1"=20'	DATE 9-9-2014	PROJECT NO. 14028
APPROVED:	DESIGNED BY: . DRAWN BY: NL CHECKED BY: KDA	SHEET NO. 2 OF 2

GRAVERSON BASEMAP.DWG Plotted on 19-Mar-2015 9:42 AM

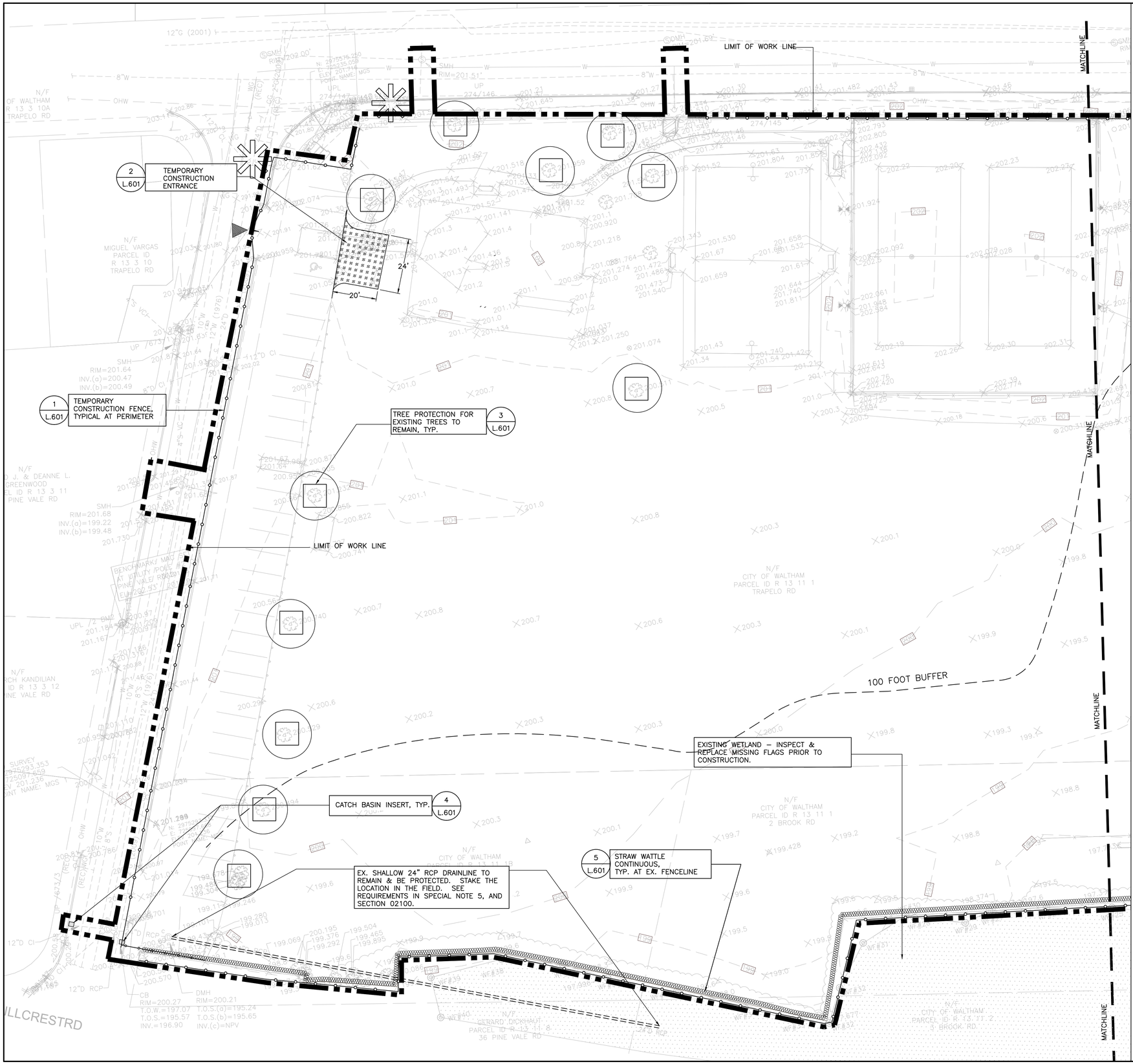

SITE PREPARATION & DEMOLITION LEGEND

L.O.W.	LIMIT OF WORK LINE
	TEMPORARY CONSTRUCTION ENTRANCE
	PROTECTED WETLAND
	STRAW WATTLE
	CONSTRUCTION FENCE, TYP.
	PARK CLOSURE SIGN, REFER TO SPEC SECTION 01500
	EXISTING TREES TO REMAIN WITH TREE PROTECTION
TYP.	TYPICAL

SPECIAL NOTES:

1. THE WORK OF THIS CONTRACT IS SUBJECT TO AN ORDER OF CONDITIONS ISSUED BY THE WALTHAM CONSERVATION COMMISSION. SEE SPEC SECTION 01571 AND APPENDIX A, ORDER OF CONDITIONS.
2. PRIOR TO BEGINNING CONSTRUCTION, PROVIDE EROSION CONTROLS AND DEP WETLANDS FILE NO. SIGN AS REQUIRED BY THE ORDER OF CONDITIONS. DO NOT BEGIN WORK UNTIL APPROVAL OF EROSION CONTROLS BY THE CONSERVATION COMMISSION.
3. PROVIDE 3 PARK CLOSURE SIGNS ATTACHED TO SECURITY FENCE (SEE SPECIFICATIONS SECTION 01500–TEMPORARY FACILITIES & CONTROLS).
4. THERE SHALL BE NO STOCKPILING OF LOAM WITH 50' OF THE WETLAND LINE.
5. THE CONTRACTOR IS REQUIRED TO PROVIDE AN EVALUATION AND DOCUMENTATION OF THE CONDITION OF 24" DRAIN LINE PRIOR TO CONSTRUCTION. REFER TO SECTION 02100 FOR REQUIREMENTS.

GENERAL NOTES:

1. BIDDERS ARE REQUIRED TO INSPECT THE SITE TO VERIFY EXISTING CONDITIONS AND WILL BE HELD RESPONSIBLE FOR THE FULL EXTENT OF WORK REQUIRED. THE CONTRACTOR SHALL INCLUDE IN HIS BID PRICE THE REMOVAL OF ALL EXISTING SITE FEATURES NECESSARY TO CONSTRUCT PROPOSED SITE IMPROVEMENTS.
2. THE CONTRACTOR SHALL REPORT ALL DEVIATIONS IN THE EXISTING CONDITIONS TO THE LANDSCAPE ARCHITECT (508) 478–8426, PRIOR TO STARTING WORK.
3. LOCATION AND DEPTH OF UTILITIES ARE APPROXIMATE. NO GUARANTEE IS EXPRESSED OR IMPLIED THAT THE DRAWINGS INDICATE ALL UTILITIES WHICH MAY EXIST. PRIOR TO ALL EXCAVATION, CONTACT "DIG SAFE" (811) TO MARK LOCATION OF RECORDED UTILITIES.
4. THE CONTRACTOR SHALL PROTECT ABUTTING PROPERTIES AND EXISTING SITE ELEMENTS TO REMAIN. ANY DAMAGE INCURRED SHALL BE REPAIRED BY THE CONTRACTOR AT NO ADDITIONAL COST TO THE CITY OF WALTHAM.
5. PROVIDE TEMPORARY 6' HT. CHAIN LINK SECURITY FENCE AS SHOWN ON THE PLANS THROUGHOUT THE CONSTRUCTION PERIOD. IT SHALL BE THE CONTRACTOR'S RESPONSIBILITY TO PROVIDE ADDITIONAL FENCING AS NECESSARY TO ADEQUATELY SECURE THE SITE FOR THE HEALTH & SAFETY OF THE GENERAL PUBLIC.
6. THERE SHALL BE NO STOCKPILING OF MATERIALS OR HEAVY EQUIPMENT WITHIN THE CANOPY OF EXISTING TREES TO REMAIN.
7. THE CONTRACTOR SHALL PERIODICALLY WATER THROUGHOUT THE CONSTRUCTION PERIOD ANY EXISTING TREES TO REMAIN WHOSE ROOTS HAVE BEEN DISTURBED BY EXCAVATION. MAINTAIN THROUGHOUT THE CONSTRUCTION PERIOD, A SOURCE OF WATER SUCH AS A WATER TRUCK OR PERMITTED CONNECTION TO CITY HYDRANT.
8. IT IS ABSOLUTELY MANDATORY TO PROVIDE DUST CONTROL THROUGHOUT THE CONSTRUCTION PERIOD UNTIL ALL SURFACES ARE PERMANENTLY STABILIZED. THE CONTRACTOR SHALL INCLUDE IN THE BID PRICE SUFFICIENT MONEY TO MAINTAIN A WATER TRUCK OR OTHER APPROVED SOURCE OF WATER AT ALL TIMES ON–SITE, AND SHALL WET DOWN SURFACES AS NECESSARY TO CONTROL DUST AND AS DIRECTED BY THE LANDSCAPE ARCHITECT.

0 20 40 60

Carolyn Cooney & Associates
Landscape Architecture / Planning
13 Elm Street, Milford, MA 01757
Telephone 508 478 8426, Facsimile 508 478 8607

Site Engineering Consultants, Inc.
55 Grape Shot Road
Sharon, Massachusetts 02067
TEL: (781) 784–0326
FAX: (781) 784–0492
CONSULTING CIVIL ENGINEERS

No.	Description	Date

REVISIONS

North

Project:

CITY OF WALTHAM
GRAVERSON PLAYGROUND
16 PINE VALE ROAD
WALTHAM, MA 02451

Prepared For:

CITY OF WALTHAM
DEPARTMENT OF RECREATION
510 MOODY STREET
WALTHAM, MA 02453

TITLE:

SITE PREPARTION
TEMPORARY CONTROLS

Scale 1"=20' Date OCT 31, 2017
Drawn By CCC
Checked By DRB
Approved By CCC
Project No. 1710.00

DWG No. L.101A

642

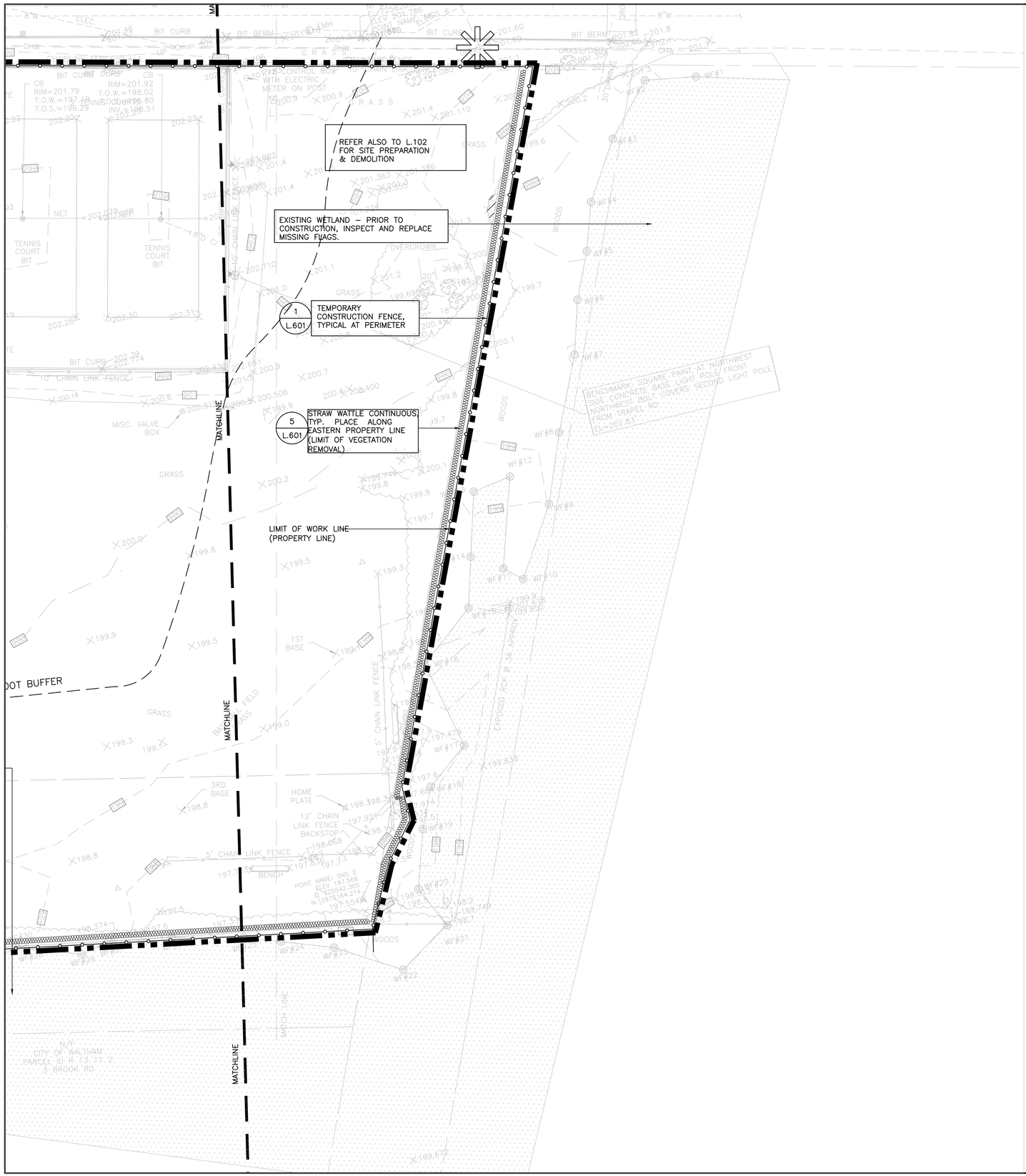

SITE PREPARATION & DEMOLITION LEGEND

L.O.W.	LIMIT OF WORK LINE
	TEMPORARY CONSTRUCTION ENTRANCE
	PROTECTED WETLAND
	STRAW WATTLE
	CONSTRUCTION FENCE, TYP.
	PARK CLOSURE SIGN, REFER TO SPEC SECTION 01500
	EXISTING TREES TO REMAIN WITH TREE PROTECTION
TYP.	TYPICAL

REFER TO L.101A FOR GENERAL AND SPECIAL NOTES

0 20 40 60

Carolyn Cooney & Associates
Landscape Architecture / Planning
13 Elm Street, Milford, MA 01757
Telephone 508 478 8426, Facsimile 508 478 8607

Site Engineering Consultants, Inc.
55 Grape Shot Road
Sharon, Massachusetts 02067
TEL: (781) 784-0326
FAX: (781) 784-0492
CONSULTING CIVIL ENGINEERS

No.	Description	Date

REVISIONS

North

Project:

CITY OF WALTHAM
GRAVERSON PLAYGROUND
16 PINE VALE ROAD
WALTHAM, MA 02451

Prepared For:

CITY OF WALTHAM
DEPARTMENT OF RECREATION
510 MOODY STREET
WALTHAM, MA 02453

TITLE:

SITE PREPARATION & TEMPORARY CONTROLS

Scale	1"=20'	Date	OCT 31, 2017
Drawn By	CCC		
Checked By	DRB		
Approved By	CCC		
Project No.	1710.00		

DWG No. L.102A

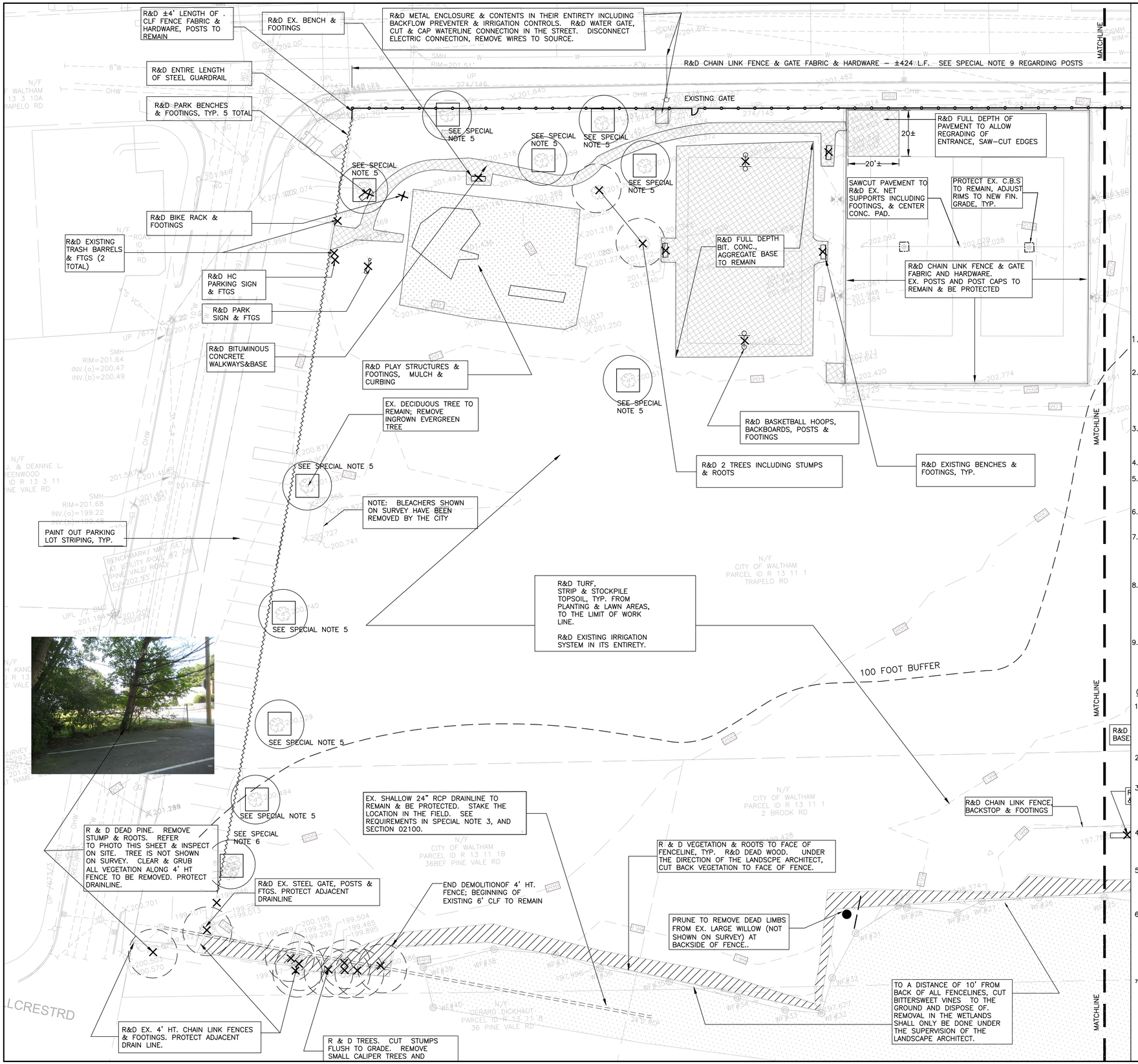

SITE PREPARATION & DEMOLITION LEGEND

- R&D BITUMINOUS CONCRETE PAVING
- R&D ENGINEERED WOOD FIBER MULCH & CURBING
- WETLAND AREA, DO NOT DISTURB
- R&D ALL VEGETATION, CLEAR & GRUB ROOTS, REMOVE STUMPS ENTIRELY
- REMOVE & DISPOSE OF EXISTING SITE ELEMENTS
- EXISTING TREES TO REMAIN, SEE SPECIAL NOTE 5
- REMOVE EXISTING TREE & STUMP IN ENTIRETY

TYP.	TYPICAL
R & D	REMOVE AND DISPOSE
R & S	REMOVE AND SALVAGE
R & R	REMOVE AND REPLACE

SPECIAL NOTES:

1. THE WORK OF THIS CONTRACT IS SUBJECT TO AN ORDER OF CONDITIONS ISSUED BY THE WALTHAM CONSERVATION COMMISSION. SEE SPEC SECTION 01571 AND APPENDIX A, ORDER OF CONDITIONS.
2. PRIOR TO BEGINNING CONSTRUCTION, PROVIDE EROSION CONTROLS AND DEP WETLANDS FILE NO. SIGN AS REQUIRED BY THE ORDER OF CONDITIONS. DO NOT BEGIN WORK UNTIL APPROVAL OF EROSION CONTROLS BY THE CONSERVATION COMMISSION. REFER TO SHEETS 101A & 101B FOR LOCATION OF EROSION CONTROLS. REFLAG WETLANDS IF FLAGS NOTED ON SURVEY ARE MISSING.
3. THE CONTRACTOR IS REQUIRED TO PROVIDE AN EVALUATION AND DOCUMENTATION OF THE CONDITION OF THE 24" DRAIN LINE PRIOR TO CONSTRUCTION. REFER TO SECTION 02100 FOR REQUIREMENTS.
4. THERE SHALL BE NO STOCKPILING OF LOAM WITHIN 50' OF THE WETLAND LINE PER ORDER OF CONDITIONS..
5. EXISTING TREES TO REMAIN SHALL BE PRUNED BY REMOVAL OF LIMBS TO PROVIDE 80" VERTICAL CLEARANCE ALONG CIRCULATION ROUTES, AND TO REMOVE DEAD OR DISEASED BRANCHES.
6. AT EXISTING CHAIN LINK FENCING ALONG THE SOUTHERN SITE BOUNDARY, CUT VINES AT THEIR BASE AND REMOVE ALL VINES GROWING WITHIN 10' OF THE BACK SIDE OF THE FENCE.
7. IT IS MANDATORY THAT THE CONTRACTOR VISIT THE SITE TO ASSESS THE AMOUNT AND TYPE OF VEGETATION THAT IS TO BE REMOVED IN AREAS SHOWN BY HATCHING. APPROXIMATE DIMENSIONS TO THE EASTERN PROPERTY LINE ARE SHOWN ON THE PLANS TO ASSIST THE CONTRACTOR IN DELINEATION OF THE AREA TO BE CLEARED.
8. THE CONTRACTOR SHALL, BASED ON VISUAL SITE INSPECTION, INCLUDE IN HIS/HER BID THE COSTS FOR REMOVAL & DISPOSAL OF ALL SURFACE ROCKS NECESSARY TO CONSTRUCT PROPOSED IMPROVEMENTS REGARDLESS OF INDIVIDUAL ROCK CUBIC YARDAGE. REMOVAL & DISPOSAL OF PARTIALLY BURIED OR COMPLETELY BURIED ROCKS OR BOULDERS WILL BE PAID FOR AS DESCRIBED IN SECTION 02200 – EARTHWORK.
9. CHAIN LINK FENCE POSTS AND FOOTINGS TO REMAIN EXCEPT AS INDICATED. IN ADDITION, THE CONTRACTOR SHALL CARRY THE COST OF REMOVING 3 10' HT CHAIN LINK POSTS AND FOOTINGS, AT LOCATIONS TO BE SELECTED BY THE LANDSCAPE ARCHITECT.

GENERAL NOTES:

1. BIDDERS ARE REQUIRED TO INSPECT THE SITE TO VERIFY EXISTING CONDITIONS AND WILL BE HELD RESPONSIBLE FOR THE FULL EXTENT OF WORK REQUIRED. THE CONTRACTOR SHALL INCLUDE IN HIS BID PRICE THE REMOVAL OF ALL EXISTING SITE FEATURES NECESSARY TO CONSTRUCT PROPOSED SITE IMPROVEMENTS.
2. THE CONTRACTOR SHALL REPORT ALL DEVIATIONS IN THE EXISTING CONDITIONS TO THE LANDSCAPE ARCHITECT (508) 478-8426, PRIOR TO STARTING WORK.
3. LOCATION AND DEPTH OF UTILITIES ARE APPROXIMATE. NO GUARANTEE IS EXPRESSED OR IMPLIED THAT THE DRAWINGS INDICATE ALL UTILITIES WHICH MAY EXIST. PRIOR TO ALL EXCAVATION, CONTACT "DIG SAFE" (811) TO MARK LOCATION OF RECORDED UTILITIES.
4. THE CONTRACTOR SHALL PROTECT ABUTTING PROPERTIES AND EXISTING SITE ELEMENTS TO REMAIN. ANY DAMAGE INCURRED SHALL BE REPAIRED BY THE CONTRACTOR AT NO ADDITIONAL COST TO THE CITY OF WALTHAM.
5. PROVIDE TEMPORARY 6' HT. CHAIN LINK SECURITY FENCE AS SHOWN ON THE PLANS THROUGHOUT THE CONSTRUCTION PERIOD. PROVIDE ADDITIONAL FENCING AS NECESSARY TO ADEQUATELY SECURE THE SITE. REFER TO SHEETS 101A & B, TEMPORARY CONTROLS.
6. THERE SHALL BE NO STOCKPILING OF MATERIALS OR HEAVY EQUIPMENT WITHIN THE CANOPY OF EXISTING TREES TO REMAIN. THE CONTRACTOR SHALL PERIODICALLY WATER THROUGHOUT THE CONSTRUCTION PERIOD ANY EXISTING TREES TO REMAIN WHOSE ROOTS HAVE BEEN DISTURBED BY EXCAVATION. MAINTAIN THROUGHOUT THE CONSTRUCTION PERIOD, A SOURCE OF WATER SUCH AS A WATER TRUCK OR PERMITTED CONNECTION TO CITY HYDRANT.
7. IT IS ABSOLUTELY MANDATORY TO PROVIDE DUST CONTROL THROUGHOUT THE CONSTRUCTION PERIOD UNTIL ALL SURFACES ARE PERMANENTLY STABILIZED. THE CONTRACTOR SHALL INCLUDE IN THE BID PRICE SUFFICIENT MONEY TO MAINTAIN A WATER TRUCK OR OTHER APPROVED SOURCE OF WATER AT ALL TIMES ON-SITE, AND SHALL WET DOWN SURFACES AS NECESSARY TO CONTROL DUST AND AS DIRECTED BY THE LANDSCAPE ARCHITECT.

0 20 40 60

Carolyn Cooney & Associates
Landscape Architecture / Planning
13 Elm Street, Milford, MA 01757
Telephone 508 478 8426, Facsimile 508 478 8607

Site Engineering Consultants, Inc.
55 Grape Shot Road
Sharon, Massachusetts 02067
TEL: (781) 784-0326
FAX: (781) 784-0492
CONSULTING CIVIL ENGINEERS

No.	Description	Date

REVISIONS

North

Project:

CITY OF WALTHAM
GRAVERSON PLAYGROUND
16 PINE VALE ROAD
WALTHAM, MA 02451

Prepared For:

CITY OF WALTHAM
DEPARTMENT OF RECREATION
510 MOODY STREET
WALTHAM, MA 02453

TITLE:

SITE PREPARTION & DEMOLITION PLAN

Scale 1"=20' Date OCT 31, 2017
Drawn By CCC
Checked By DRB
Approved By CCC
Project No. 1710.00

DWG No. L.101

644

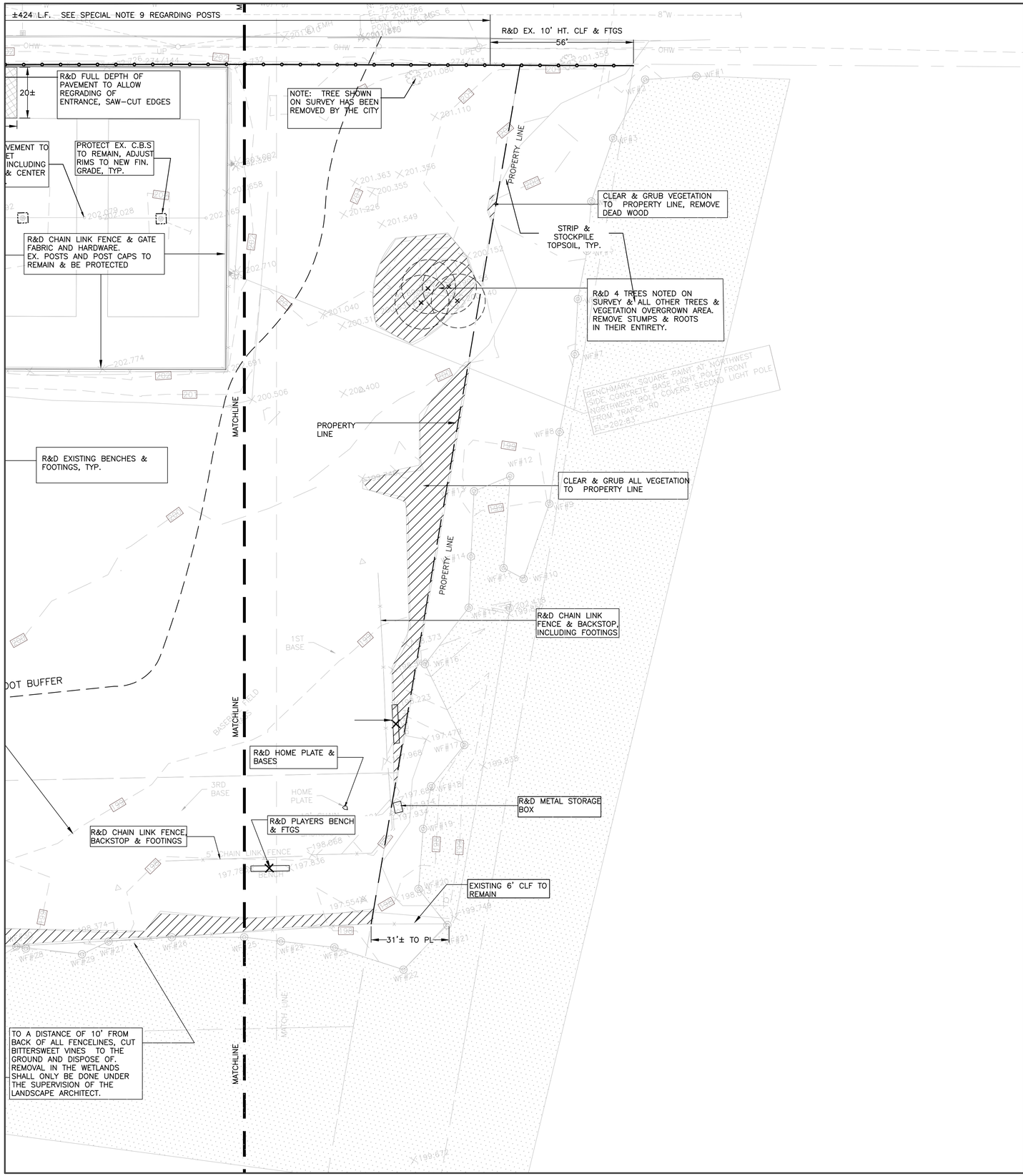

SITE PREPARATION & DEMOLITION LEGEND

- R&D BITUMINOUS CONCRETE PAVING
- R&D ENGINEERED WOOD FIBER MULCH & CURBING
- WETLAND AREA, DO NOT DISTURB
- R&D ALL VEGETATION, CLEAR & GRUB ROOTS, REMOVE STUMPS ENTIRELY
- × REMOVE & DISPOSE OF EXISTING SITE ELEMENTS
- EXISTING TREES TO REMAIN, SEE SPECIAL NOTE 5
- REMOVE EXISTING TREE & STUMP IN ENTIRETY

TYP.	TYPICAL
R & D	REMOVE AND DISPOSE
R & S	REMOVE AND SALVAGE
R & R	REMOVE AND REPLACE

REFER TO L.101 FOR GENERAL AND SPECIAL NOTES

0 20 40 60

Carolyn Cooney & Associates
Landscape Architecture / Planning
13 Elm Street, Milford, MA 01757
Telephone 508 478 8426, Facsimile 508 478 8607

Site Engineering Consultants, Inc.
55 Grape Shot Road
Sharon, Massachusetts 02067
TEL: (781) 784-0326
FAX: (781) 784-0492
CONSULTING CIVIL ENGINEERS

No.	Description	Date

REVISIONS

North

Project:

CITY OF WALTHAM
GRAVERSON PLAYGROUND
16 PINE VALE ROAD
WALTHAM, MA 02451

Prepared For:

CITY OF WALTHAM
DEPARTMENT OF RECREATION
510 MOODY STREET
WALTHAM, MA 02453

TITLE:

SITE PREPARATION & DEMOLITION PLAN

Scale	1"=20'	Date OCT 31, 2017
Drawn By	CCC	
Checked By	DRB	
Approved By	CCC	
Project No.	1710.00	

DWG No. L.102

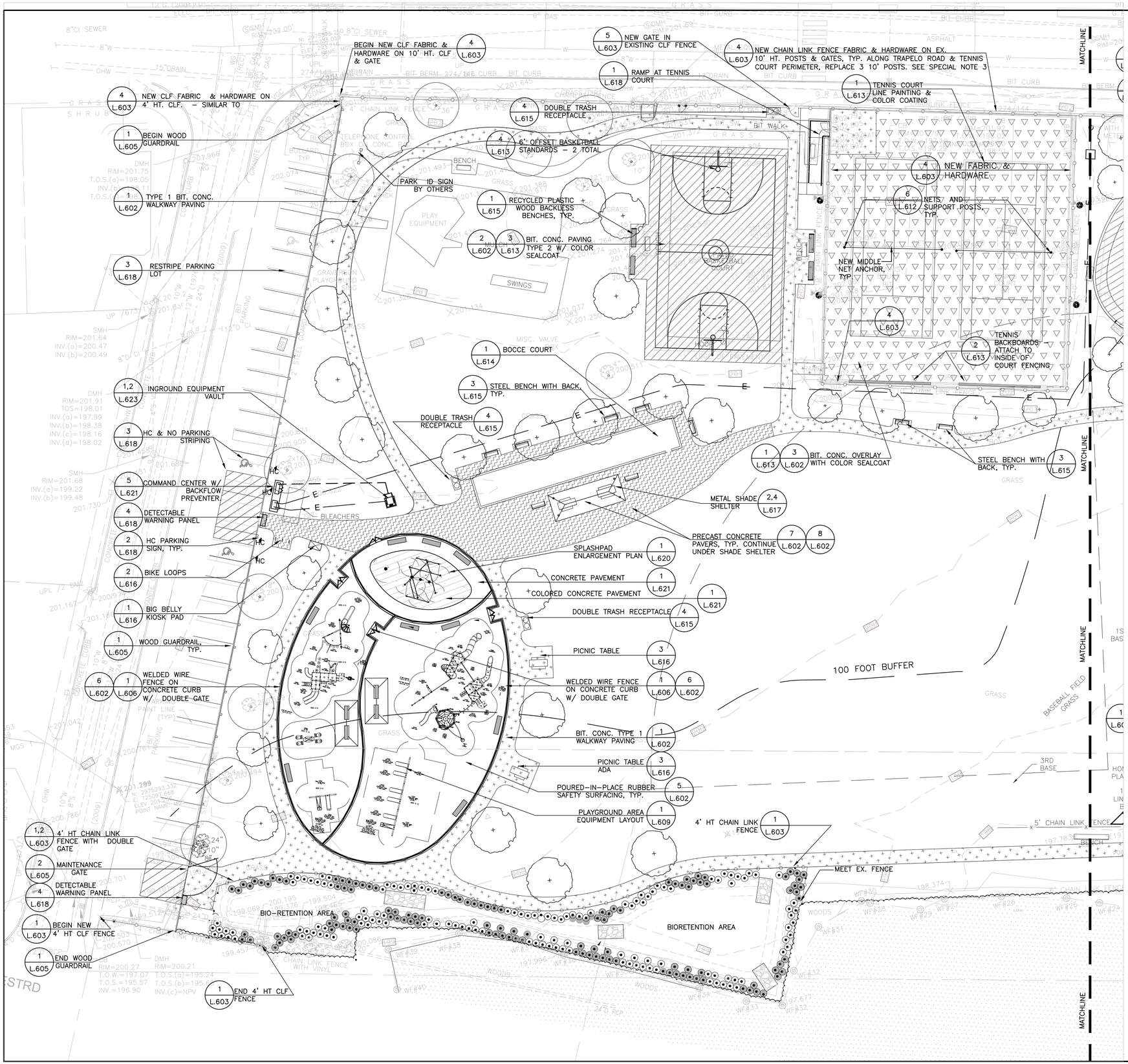

MATERIALS LEGEND

BITUMINOUS CONCRETE PAVING TYP 1	1 / L.601
BITUMINOUS CONCRETE PAVING TYPE 2	2 / L.602
BITUMINOUS CONCRETE OVERLAY	3 / L.602
PRECAST CONCRETE PAVING, TYP. ON CONCRETE BASE	7 / L.602
POURED-IN-PLACE RUBBER SAFETY SURFACING	5 / L.602
WELDED WIRE FENCE ON CONCRETE CURB WALL	1 / L.606, 6 / L.602
VINYL CHAIN LINK FENCE	1–3 / L.603
WOOD GUARDRAIL	1 / L.605
6' STEEL BENCH W/ BACK (11 REQUIRD)	3 / L.615
6' PLASTIC WOOD BENCH W/ BACK 4 REQUIRED	2 / L.615
8' BACKLESS BENCH 13 REQUIRED	1 / L.615
PICNIC TABLES (ADA)	3 / L.616
EXISTING TREE TO REMAIN	
PROPOSED TREE	

GENERAL NOTES:

1. BIDDERS ARE REQUIRED TO INSPECT THE CONSTRUCTION SITE TO VERIFY EXISTING CONDITIONS AND WILL BE HELD RESPONSIBLE FOR THE FULL EXTENT OF WORK REQUIRED.
2. THE CONTRACTOR SHALL REPORT ALL DEVIATIONS IN THE EXISTING CONDITIONS TO THE LANDSCAPE ARCHITECT (508) 478–8426, PRIOR TO STARTING WORK.
3. LOCATION AND DEPTH OF UTILITIES ARE APPROXIMATE. NO GUARANTEE IS EXPRESSED OR IMPLIED THAT THE DRAWINGS INDICATE ALL UTILITIES WHICH MAY EXIST. PRIOR TO ANY EXCAVATION, CONTACT "DIG SAFE" (811) TO MARK LOCATION OF RECORDED UTILITIES.
4. THE CONTRACTOR SHALL PROTECT ABUTTING PROPERTIES AND EXISTING SITE ELEMENTS TO REMAIN. ANY DAMAGE INCURRED SHALL BE REPAIRED BY THE CONTRACTOR AT NO ADDITIONAL COST TO THE CITY OF WALTHAM.

SPECIAL NOTES:

1. REFER TO DRAWINGS L.101A & L.102A FOR LIMIT OF WORK LINE.
2. REPLACE 3 10' HT. CLF FENCE POSTS & FTGS ON IN LOCATIONS CHOSEN IN THE FIELD BY THE LANDSCAPE ARCHITECT.
3. THE WORK OF THIS CONTRACT IS SUBJECT TO AN ORDER OF CONDITIONS ISSUED BY THE WALTHAM CONSERVATION COMMISSION. SEE SPEC SECTION 01571 AND APPENDIX A, ORDER OF CONDITIONS.
4. PLAY EQUIPMENT AND WATER PLAY EQUIPMENT TO BE SUPPLIED BY THE OWNER FOR INSTALLATION BY THE CONTRACTOR. SEE SPEC SECTIONS 01010 SUMMARY OF WORK, AND SECTION 01040 CONTROL OF THE WORK FOR A DESCRIPTION OF THE CONTRACTOR'S RESPONSIBILITIES FOR COORDINATION AND RECEIPT OF DELIVERY.

0 20 40 60

Carolyn Cooney & Associates
Landscape Architecture / Planning
13 Elm Street, Milford, MA 01757
Telephone 508 478 8426, Facsimile 508 478 8607

Site Engineering Consultants, Inc.
55 Grape Shot Road
Sharon, Massachusetts 02067
TEL: (781) 784-0326
FAX: (781) 784-0492
CONSULTING CIVIL ENGINEERS

MASSACHUSETTS NORFOLK COUNTY REGISTERED LANDSCAPE ARCHITECT No. 720
10-23-17

No.	Description	Date

REVISIONS

North

Project:

CITY OF WALTHAM
GRAVERSON PLAYGROUND
16 PINE VALE ROAD
WALTHAM, MA 02451

Prepared For:

CITY OF WALTHAM
DEPARTMENT OF RECREATION
510 MOODY STREET
WALTHAM, MA 02453

TITLE:

MATERIALS PLAN

Scale 1"=20' Date OCT 31, 2017
Drawn By CCC
Checked By DRB
Approved By CCC
Project No. 1710.00

DWG No. L.201

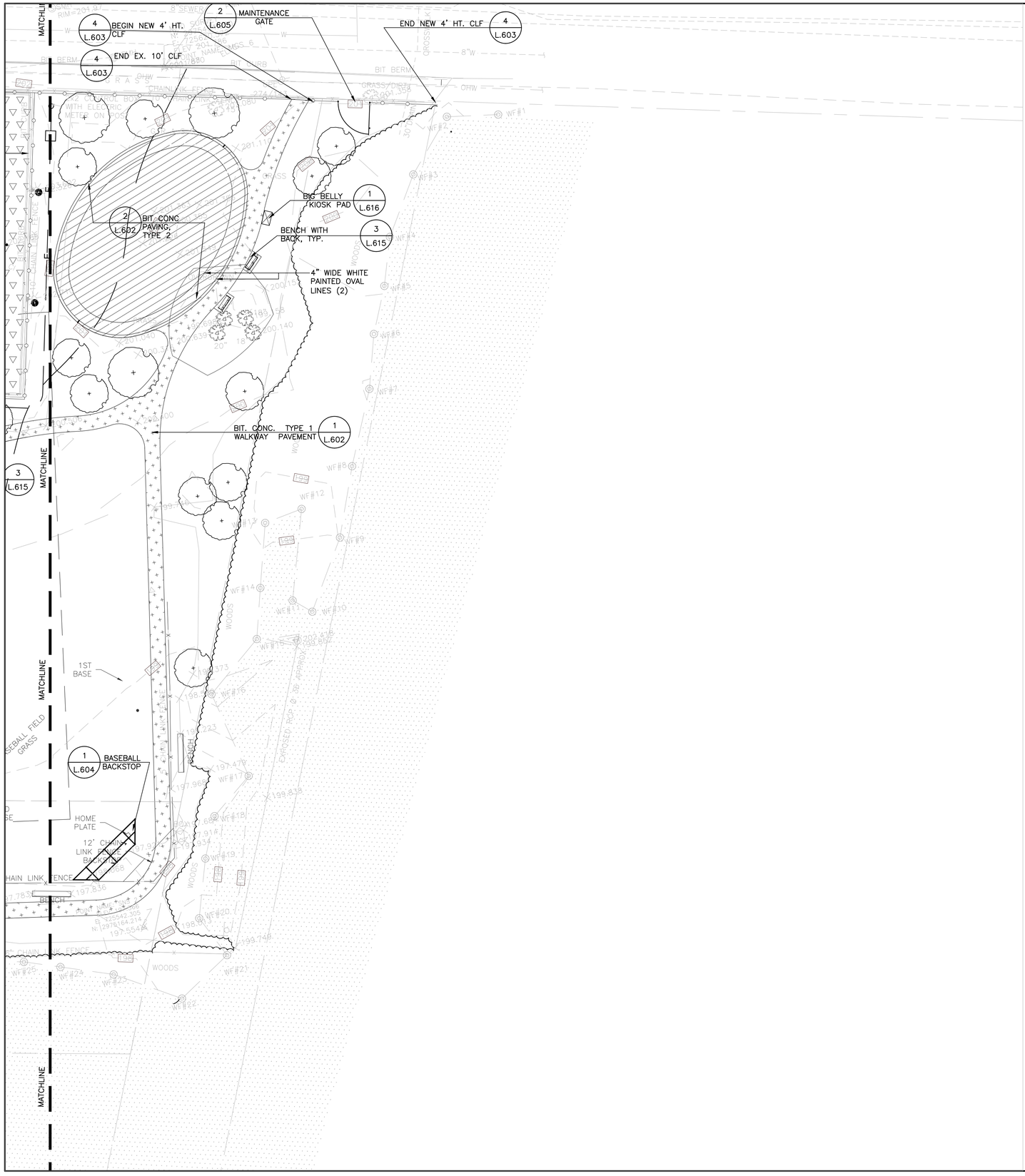

MATERIALS LEGEND

	BITUMINOUS CONCRETE PAVING TYP 1	1 / L.601
	BITUMINOUS CONCRETE PAVING TYPE 2	2 / L.602
	BITUMINOUS CONCRETE OVERLAY	3 / L.602
	PRECAST CONCRETE PAVING, TYP. ON CONCRETE BASE	7 / L.602
	POURED-IN-PLACE RUBBER SAFETY SURFACING	5 / L.602
	WELDED WIRE FENCE ON CONCRETE CURB WALL	1 / L.606
	VINYL CHAIN LINK FENCE	1-3 / L.603
	WOOD GUARDRAIL	1 / L.605
	BITUMINOUS CONCRETE BERM	4 / L.602
	6' STEEL BENCH W/ BACK (11 REQUIRD)	3 / L.615
	6' PLASTIC WOOD BENCH W/ BACK 4 REQUIRED	2 / L.615
	8' BACKLESS BENCH 13 REQUIRED	1 / L.615
ADA	PICNIC TABLES	3 / L.616
	EXISTING TREE TO REMAIN	
	PROPOSED TREE	

REFER TO L.201 FOR NOTES

0 20 40 60

Carolyn Cooney & Associates
Landscape Architecture / Planning
13 Elm Street, Milford, MA 01757
Telephone 508 478 8426, Facsimile 508 478 8607

Site Engineering Consultants, Inc.
55 Grape Shot Road
Sharon, Massachusetts 02067
TEL: (781) 784-0326
FAX: (781) 784-0492
CONSULTING CIVIL ENGINEERS

MASSACHUSETTS CAROLYN COONEY REGISTERED LANDSCAPE ARCHITECT NO. 719
Carolyn Cooney 10-23-17

No.	Description	Date

REVISIONS

North

Project:

CITY OF WALTHAM
GRAVERSON PLAYGROUND
16 PINE VALE ROAD
WALTHAM, MA 02451

Prepared For:

CITY OF WALTHAM
DEPARTMENT OF RECREATION
510 MOODY STREET
WALTHAM, MA 02453

TITLE:

MATERIALS PLAN

Scale 1"=20' Date OCT 31, 2017
Drawn By CCC
Checked By DRB
Approved By CCC
Project No. 1710.00

DWG No. L.202

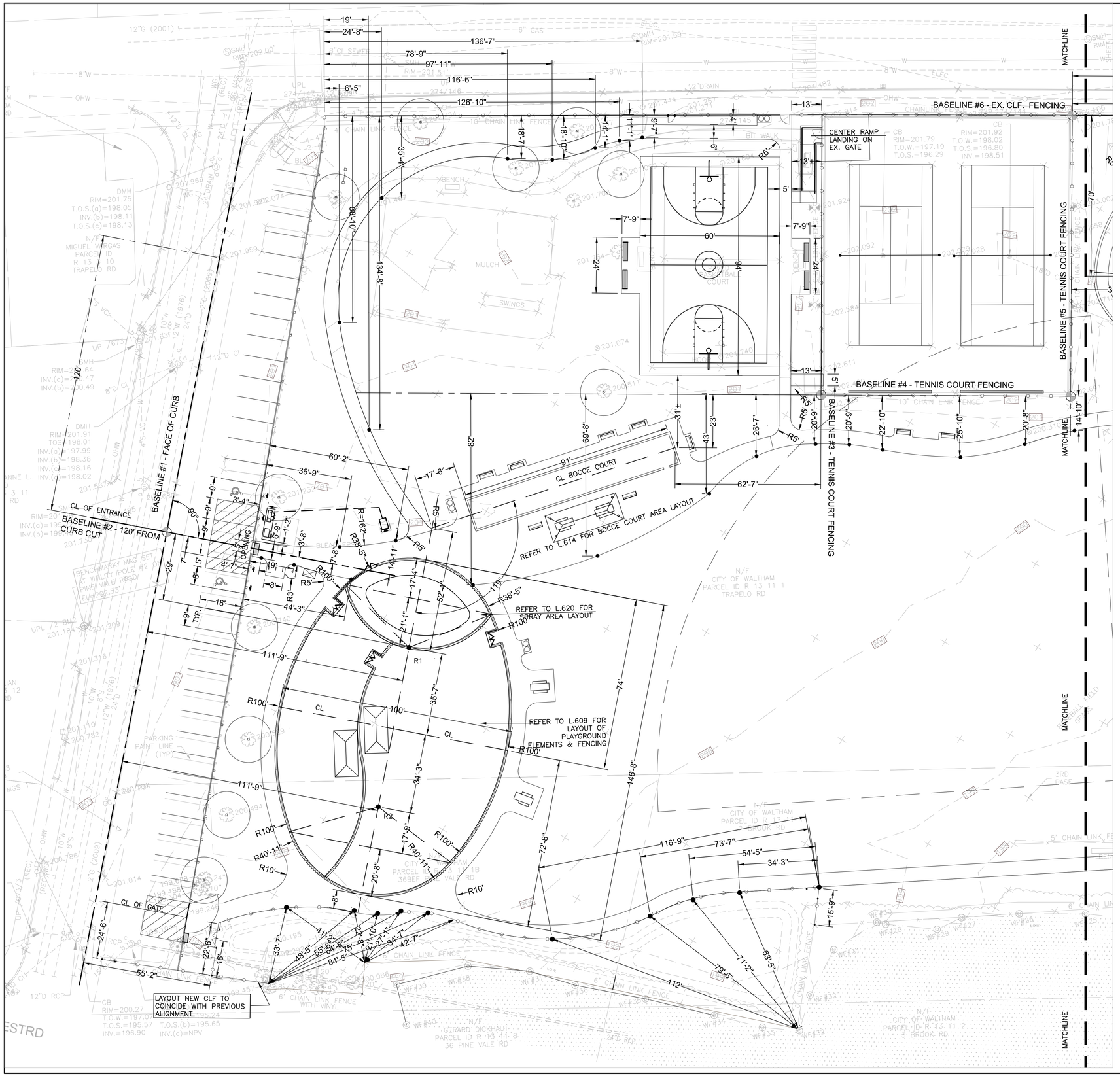

GENERAL NOTES

1. LAYOUT LINES, OFFSET, OR REFERENCES TO LOCATING OBJECTS ARE EITHER PARALLEL, PERPENDICULAR OR RADIAL UNLESS OTHERWISE NOTED.
2. SITE FEATURES SHALL BE LAID OUT AND STAKED FOR REVIEW AND APPROVAL BY THE LANDSCAPE ARCHITECT. ANY REQUIRED ADJUSTMENTS TO THE LAYOUT SHALL BE UNDERTAKEN AS DIRECTED AT NO ADDITIONAL COST TO THE OWNER.
3. ALL PLAY EQUIPMENT SHALL BE LAID OUT PRIOR TO PROCEEDING WITH ANY PORTION OF THE INSTALLATION. PRIOR TO INSTALLATION THE LAYOUT SHALL BE REVIEWED BY A CPSI (CERTIFIED PLAYGROUND SAFETY INSPECTOR) TO ENSURE COMPLIANCE WITH RELEVANT CODES.

SPECIAL NOTES

1. THE LAYOUT OF MAJOR PATHS, WALLS AND CURBING SMALL BE DONE BY A REGISTERED SURVEYOR.
2. SEE ENLARGEMENT PLANS FOR LAYOUT OF PLAYGROUND AREA AND BOCCE COURT.
3. LAYOUT CURBING AT PLAYGROUND ELLIPSE AND PLAYGROUND EQUIPMENT, PRIOR TO INSTALLATION OF THESE FEATURES. ENSURE THAT DIMENSIONS OF PLAY AREA ACCOMMODATE THE SAFETY ZONES OF PLAY EQUIPMENT, PRIOR TO PROCEEDING WITH INSTALLATION OF CURBING OR PLAY EQUIPMENT.

Carolyn Cooney & Associates
Landscape Architecture / Planning
13 Elm Street, Milford, MA 01757
Telephone 508 478 8426, Facsimile 508 478 8607

Site Engineering Consultants, Inc.
55 Grape Shot Road
Sharon, Massachusetts 02067
TEL: (781) 784-0326
FAX: (781) 784-0492
CONSULTING CIVIL ENGINEERS

Carolyn Cooney 10-23-17

No.	Description	Date

REVISIONS

North

Project:

CITY OF WALTHAM
GRAVERSON PLAYGROUND
16 PINE VALE ROAD
WALTHAM, MA 02451

Prepared For:

CITY OF WALTHAM
DEPARTMENT OF RECREATION
510 MOODY STREET
WALTHAM, MA 02453

TITLE:

LAYOUT PLAN

Scale	1"=20'	Date	OCT 31, 2017
Drawn By	CCC		
Checked By	DRB		
Approved By	CCC		
Project No.	1710.00		

DWG No. L.301

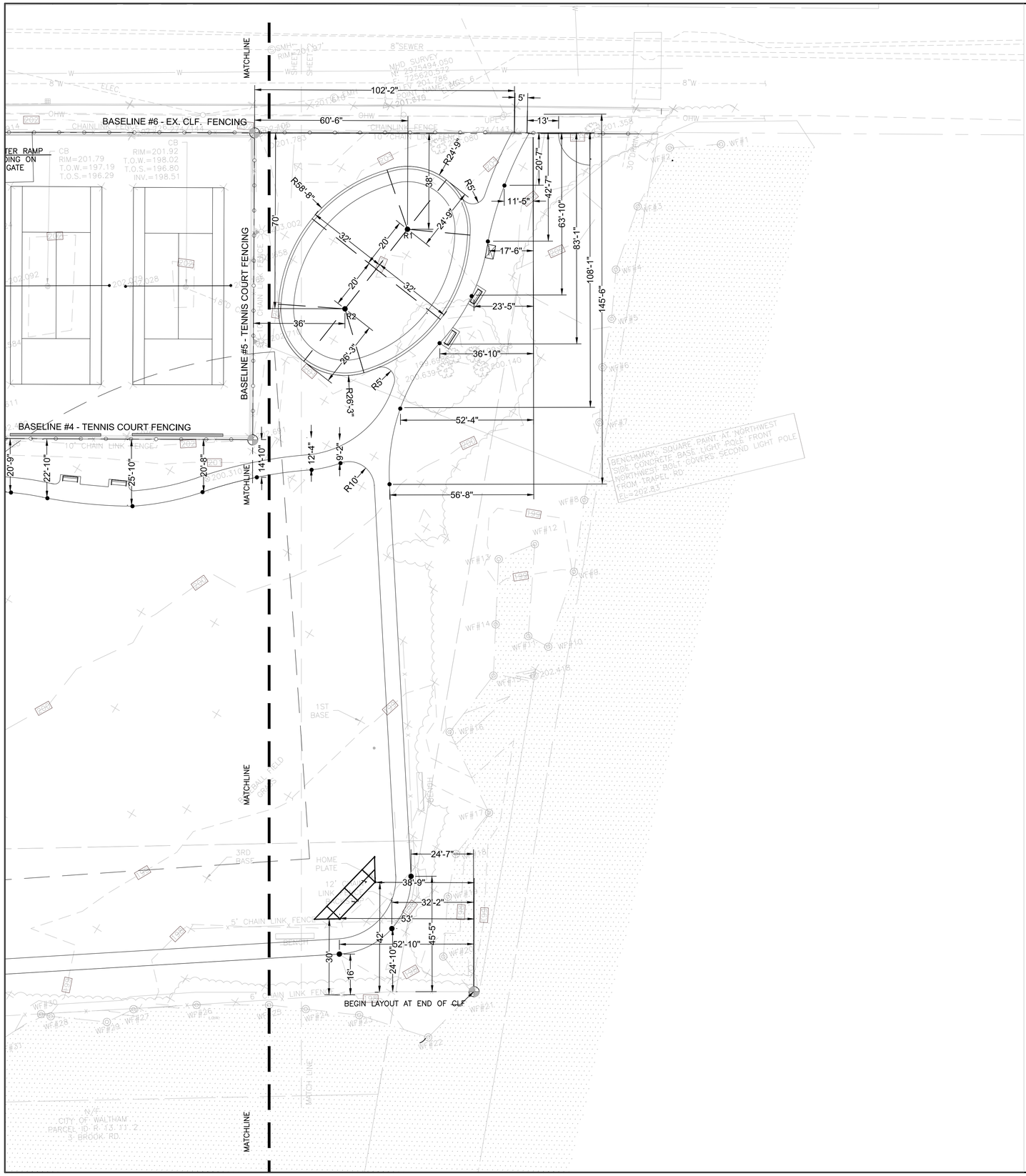

REFER TO L.301 FOR GENERAL AND SPECIAL NOTES

0 20 40 60

Carolyn Cooney & Associates
Landscape Architecture / Planning
13 Elm Street, Milford, MA 01757
Telephone 508 478 8426, Facsimile 508 478 8607

Site Engineering Consultants, Inc.
55 Grape Shot Road
Sharon, Massachusetts 02067
TEL: (781) 784-0326
FAX: (781) 784-0492
CONSULTING CIVIL ENGINEERS

Carolyn Cooney
10-23-17

No.	Description	Date

REVISIONS

North

Project:

CITY OF WALTHAM
GRAVERSON PLAYGROUND
16 PINE VALE ROAD
WALTHAM, MA 02451

Prepared For:

CITY OF WALTHAM
DEPARTMENT OF RECREATION
510 MOODY STREET
WALTHAM, MA 02453

TITLE:

LAYOUT PLAN

Scale 1"=20' Date OCT 31, 2017
Drawn By CCC
Checked By DRB
Approved By CCC
Project No. 1710.00

DWG No. L.302

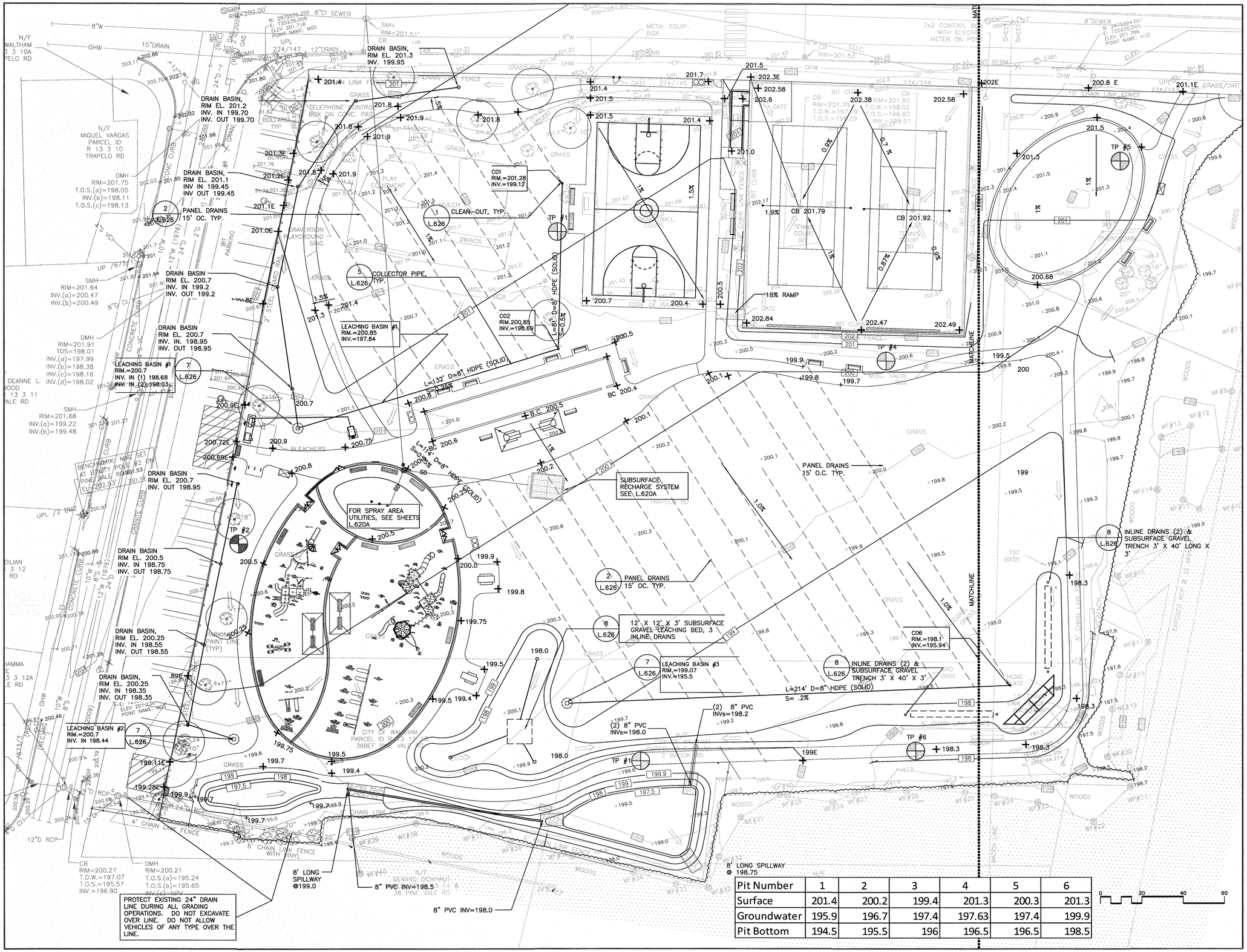

Pit Number	1	2	3	4	5	6
Surface	201.4	200.2	199.4	201.3	200.3	201.3
Groundwater	195.9	196.7	197.4	197.63	197.4	199.9
Pit Bottom	194.5	195.5	196	196.5	196.5	198.5

Carolyn Cooney & Associates
Landscape Architecture / Planning
13 Elm Street, Milford, MA 01757
Telephone 508 478 8426, Facsimile 508 478 8607

Site Engineering Consultants, Inc.
55 Grape Shot Road
Sharon, Massachusetts 02067
TEL: (781) 784-0326
FAX: (781) 784-0492
CONSULTING CIVIL ENGINEERS

SEE L.402 FOR GRADING NOTES

COMMONWEALTH OF MASSACHUSETTS PETER M. BLAISDELL, JR. CIVIL No. 41613
(10/31/17)
DRAINAGE CALCULATIONS & BIORETENTION AREA DESIGNS ONLY.

MASSACHUSETTS JOSEPH P. CONNEY JR. No. 720 LANDSCAPE ARCHITECT
Carolyn Cooney
10-23-17

No.	Description	Date

REVISIONS

North

Project:

CITY OF WALTHAM
GRAVERSON PLAYGROUND
16 PINE VALE ROAD
WALTHAM, MA 02451

Prepared For:

CITY OF WALTHAM
DEPARTMENT OF RECREATION
510 MOODY STREET
WALTHAM, MA 02453

TITLE:

GRADING PLAN

Scale 1"=20'
Date OCT 31, 2017
Drawn By CCC
Checked By DRB
Approved By CCC
Project No. 1710.00

DWG No. L.401

650

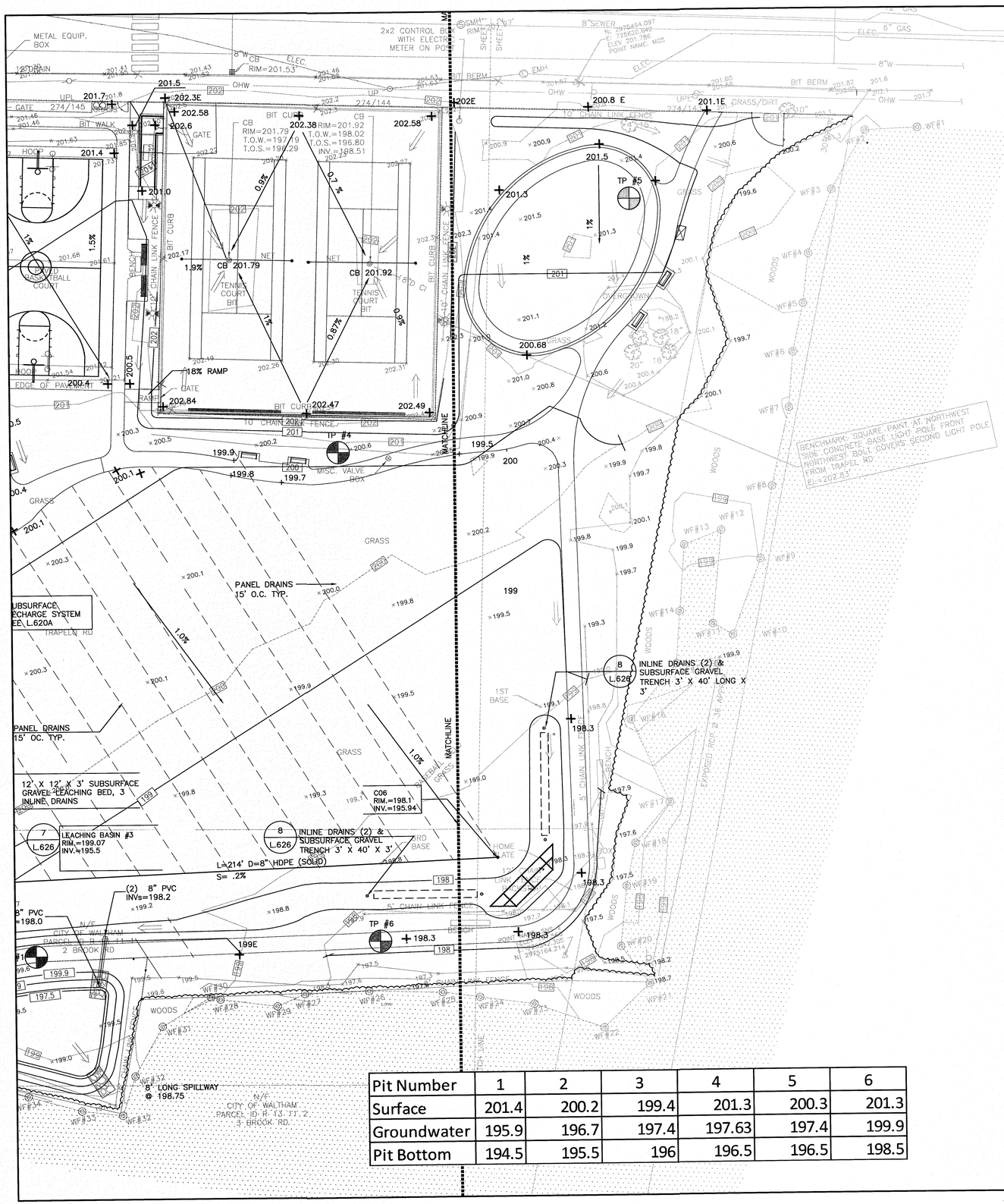

Pit Number	1	2	3	4	5	6
Surface	201.4	200.2	199.4	201.3	200.3	201.3
Groundwater	195.9	196.7	197.4	197.63	197.4	199.9
Pit Bottom	194.5	195.5	196	196.5	196.5	198.5

GRADING NOTES

GENERAL NOTES:

1. BIDDERS ARE REQUIRED TO INSPECT THE CONSTRUCTION SITE TO VERIFY EXISTING CONDITIONS AND WILL BE HELD RESPONSIBLE FOR THE FULL EXTENT OF WORK REQUIRED.
2. THE CONTRACTOR SHALL REPORT DEVIATIONS IN THE EXISTING CONDITIONS TO THE LANDSCAPE ARCHITECT (508) 478-8426, PRIOR TO STARTING WORK.
3. LOCATION AND DEPTH OF UTILITIES ARE APPROXIMATE. NO GUARANTEE IS EXPRESSED OR IMPLIED THAT THE DRAWINGS INDICATE ALL UTILITIES WHICH MAY EXIST. PRIOR TO ANY EXCAVATION, CONTACT "DIG SAFE" (811) A MINIMUM OF 72 HOURS PRIOR TO BEGINNING GRADING OPERATIONS TO MARK LOCATION OF RECORDED UTILITIES. NOTIFY ALL CORPORATIONS, COMPANIES, INDIVIDUALS OR LOCAL AUTHORITIES OWNING OR HAVING JURISDICTION OVER UTILITIES RUNNING TO, THROUGH OR ACROSS AREAS DISTURBED BY EXCAVATION.
4. THE CONTRACTOR SHALL PROTECT ALL ABUTTING PROPERTIES AND EXISTING SITE ELEMENTS TO REMAIN. ANY DAMAGE INCURRED SHALL BE REPAIRED BY THE CONTRACTOR AT NO ADDITIONAL COST TO THE CITY OF WALTHAM.
5. PROVIDE GRADE STAKES SHOWING DEPTH OF VARIOUS MATERIALS AND LIMIT OF GRADING FOR REVIEW BY THE LANDSCAPE ARCHITECT IN THE FIELD BEFORE FINAL GRADING OPERATIONS.
6. GRADING IS TO BE SMOOTH AND CONTINUOUS.
7. CROSS-SLOPES OF PAVEMENT SHALL NOT EXCEED 2%, AND LONGITUDINAL SLOPES SHALL NOT EXCEED 5%. VERIFY CONFORMANCE WITH ADA AND MAAB STANDARDS AND WHERE DISCREPANCIES ARE FOUND TO EXIST, NOTIFY THE LANDSCAPE ARCHITECT PRIOR TO PROCEEDING. THERE ARE NO CONSTRUCTION TOLERANCES ALLOWED BY ADA OR MAAB STANDARDS.

SPECIAL NOTES:

1. LASER GRADING EQUIPMENT SHALL BE USED TO ACHIEVE FINAL GRADING OF THE LAWN AREAS. REFER TO SECTION 02200 – EARTHWORK.
2. REFER TO C.1 AND L.625 FOR DRAINAGE DETAILS.
3. THE CONTRACTOR SHALL INCLUDE IN HIS/HER BID THE COSTS FOR REMOVAL & DISPOSAL OF ALL ROCKS SITTING ON THE SURFACE WHOSE REMOVAL IS NECESSARY TO CONSTRUCTION OF PROPOSED IMPROVEMENTS, REGARDLESS OF INDIVIDUAL ROCK CUBIC YARDAGE. REMOVAL & DISPOSAL OF PARTIALLY BURIED OR COMPLETELY BURIED SUBSURFACE ROCKS OR BOULDERS WILL BE PAID FOR AS DESCRIBED IN SECTION 02200 – EARTHWORK.
4. THE WORK OF THIS CONTRACT IS SUBJECT TO AN ORDER OF CONDITIONS ISSUED BY THE WALTHAM CONSERVATION COMMISSION. SEE SPEC SECTION 01571 AND APPENDIX A, ORDER OF CONDITIONS.

0 20 40 60

Carolyn Cooney & Associates
Landscape Architecture / Planning
13 Elm Street, Milford, MA 01757
Telephone 508 478 8426, Facsimile 508 478 8607

Site Engineering Consultants, Inc.
55 Grape Shot Road
Sharon, Massachusetts 02067
TEL: (781) 784-0326
FAX: (781) 784-0492
CONSULTING CIVIL ENGINEERS

COMMONWEALTH OF MASSACHUSETTS PETER M. BLAISDELL, JR. CIVIL No. 41613
(10/31/17)
DRAINAGE CALCULATIONS & BIO RETENTION AREA DESIGNS ONLY

MASSACHUSETTS NORTH CORE CONSULTANTS, INC. No. 18
10-23-17

No.	Description	Date

REVISIONS

North

Project:

CITY OF WALTHAM
GRAVERSON PLAYGROUND
16 PINE VALE ROAD
WALTHAM, MA 02451

Prepared For:

CITY OF WALTHAM
DEPARTMENT OF RECREATION
510 MOODY STREET
WALTHAM, MA 02453

TITLE:

GRADING PLAN

Scale 1"=20' Date OCT 31, 2017
Drawn By CCC
Checked By DRB
Approved By CCC
Project No. 1710.00

DWG No. L.402

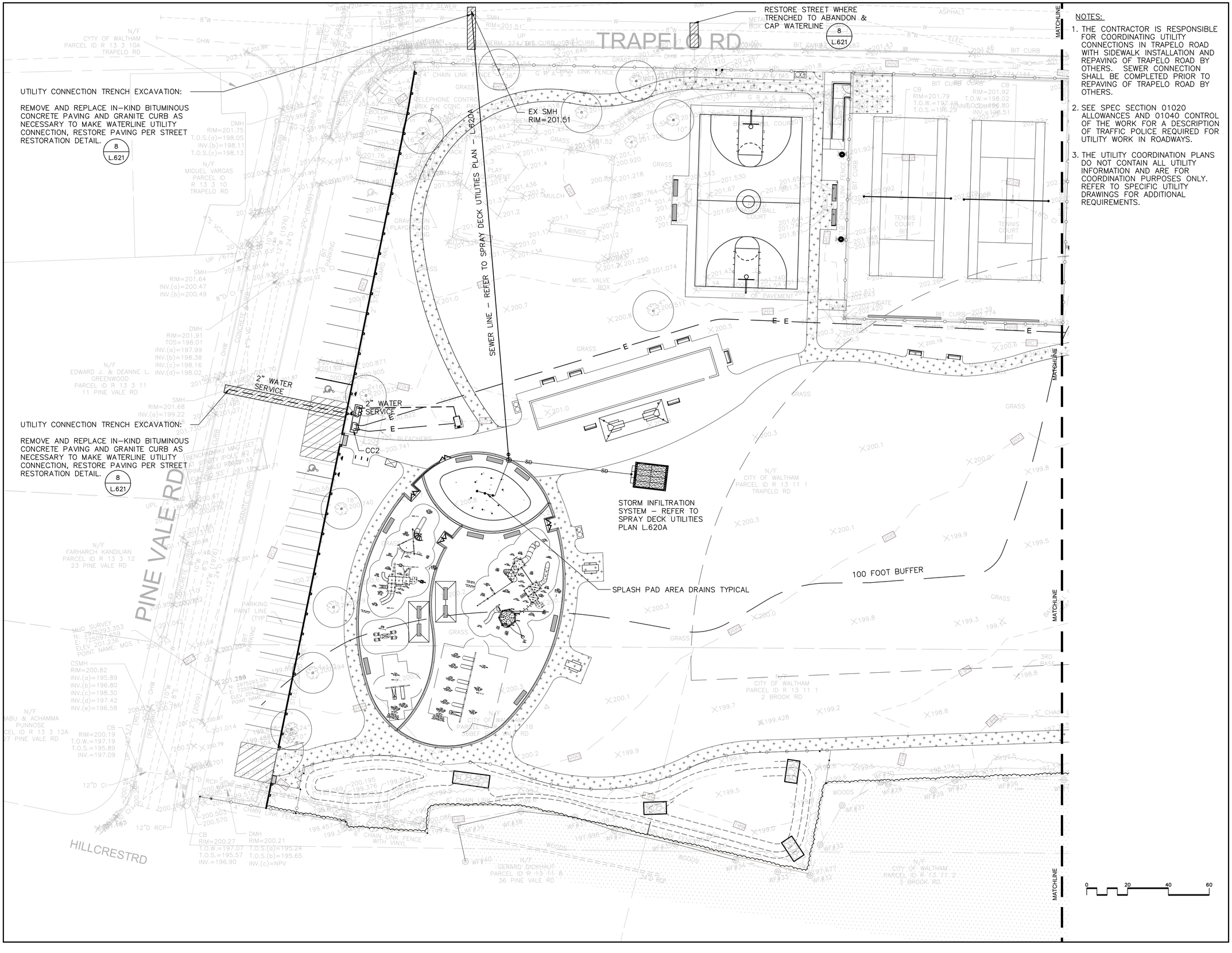

NOTES:

1. THE CONTRACTOR IS RESPONSIBLE FOR COORDINATING UTILITY CONNECTIONS IN TRAPELO ROAD WITH SIDEWALK INSTALLATION AND REPAVING OF TRAPELO ROAD BY OTHERS. SEWER CONNECTION SHALL BE COMPLETED PRIOR TO REPAVING OF TRAPELO ROAD BY OTHERS.
2. SEE SPEC SECTION 01020 ALLOWANCES AND 01040 CONTROL OF THE WORK FOR A DESCRIPTION OF TRAFFIC POLICE REQUIRED FOR UTILITY WORK IN ROADWAYS.
3. THE UTILITY COORDINATION PLANS DO NOT CONTAIN ALL UTILITY INFORMATION AND ARE FOR COORDINATION PURPOSES ONLY. REFER TO SPECIFIC UTILITY DRAWINGS FOR ADDITIONAL REQUIREMENTS.

Carolyn Cooney & Associates
Landscape Architecture / Planning
13 Elm Street, Milford, MA 01757
Telephone 508 478 8426, Facsimile 508 478 8607

Site Engineering Consultants, Inc.
55 Grape Shot Road
Sharon, Massachusetts 02067
TEL: (781) 784-0326
FAX: (781) 784-0492
CONSULTING CIVIL ENGINEERS

MASSACHUSETTS CAROLYN COONEY ARCHITECT NO. 770

Carolyn Cooney
10-23-17

No.	Description	Date

REVISIONS

North

Project:

CITY OF WALTHAM
GRAVERSON PLAYGROUND
16 PINE VALE ROAD
WALTHAM, MA 02451

Prepared For:

CITY OF WALTHAM
DEPARTMENT OF RECREATION
510 MOODY STREET
WALTHAM, MA 02453

TITLE:

UTILITY COORDINATION PLAN

Scale	1"=20'	Date OCT 31, 2017
Drawn By	CCC	
Checked By	DRB	
Approved By	CCC	
Project No.	1710.00	

DWG No. L.451

652

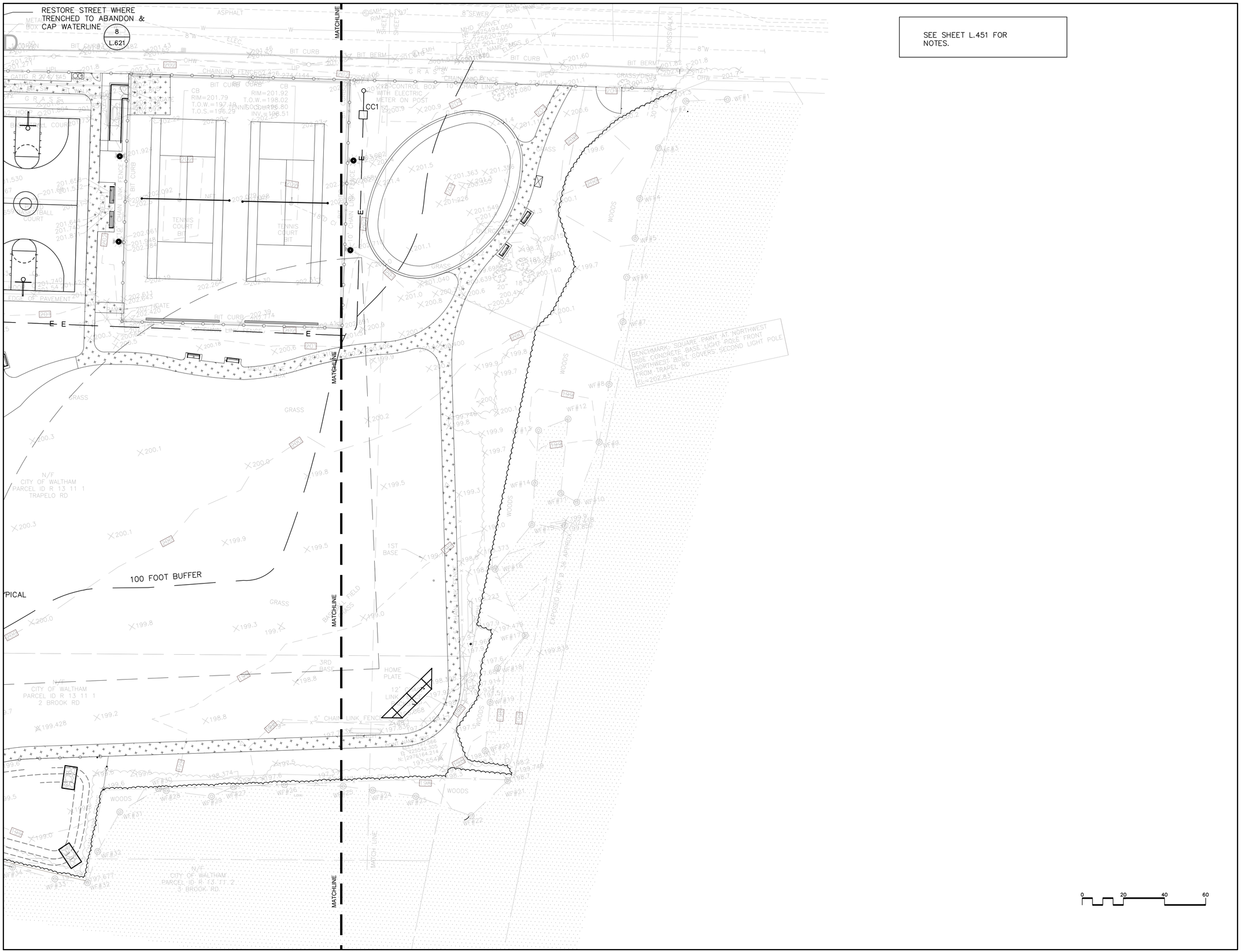

SEE SHEET L.451 FOR NOTES.

Carolyn Cooney & Associates
Landscape Architecture / Planning
13 Elm Street, Milford, MA 01757
Telephone 508 478 8426, Facsimile 508 478 8607

Site Engineering Consultants, Inc.
55 Grape Shot Road
Sharon, Massachusetts 02067
TEL: (781) 784-0326
FAX: (781) 784-0492
CONSULTING CIVIL ENGINEERS

Carolyn Cooney
10-23-17

No.	Description	Date

REVISIONS

North

Project:

CITY OF WALTHAM
GRAVERSON PLAYGROUND
16 PINE VALE ROAD
WALTHAM, MA 02451

Prepared For:

CITY OF WALTHAM
DEPARTMENT OF RECREATION
510 MOODY STREET
WALTHAM, MA 02453

TITLE:

UTILTY COORDINATION PLAN

Scale	1"=20'	Date	OCT 31, 2017
Drawn By	CCC		
Checked By	DRB		
Approved By	CCC		
Project No.	1710.00		

DWG No. L.452

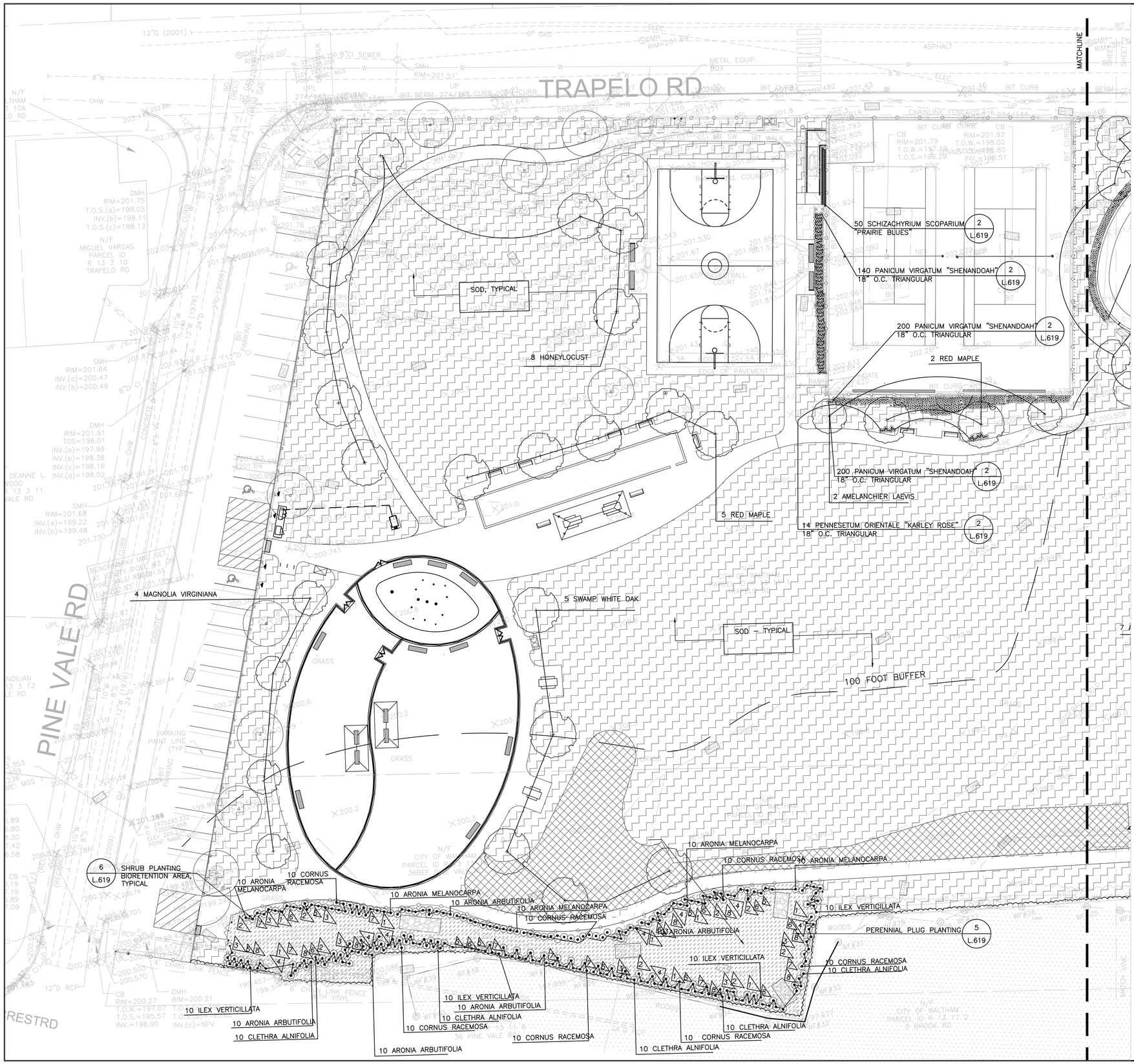

LEGEND

- SOD
- BIODETENTION BASIN MIX #1 – MOWABLE
- BIODETENTION BASIN MIX #2 – NO MOW
- EXISTING TREE TO REMAIN
- PROPOSED TREE
- PROPOSED SHRUBS OR ORNAMENTAL GRASS

REFER TO L.502 FOR PLANT SCHEDULE.

1. Caltha palustris – Marsh Marigold:
2. Carex crinata – Fringed Sedge
3. Carex vulpinoidea – Fox Sedge
4. Eupatorium fistolosum
5. Lobelia cardinalis
6. Onocelea sensibilis
7. Osmunda cinnamomea
8. Solidago graminifolia

PLANTING NOTES:

1. PROVIDE 6" OF COMPACTED LOAM IN LAWN, PLANTING AND BIORETENTION AREAS.
2. HYDROSEED BIORETENTION SIDE-SLOPES AND BOTTOMS WITH SPECIFIED SEEDING MIX, INCLUDING AREAS SCHEDULED FOR SHRUBS AND FORB PLANTING.
3. PROVIDE SOIL AMENDMENTS AS RECOMMENDED BY THE SOILS TESTING AGENCY. DO NOT PROVIDE PHOSPHATE FERTILIZER UNLESS RECOMMENDED BY THE SOILS TESTING AGENCY, AND USE ONLY AT RECOMMENDED RATES FOR PLANT ESTABLISHMENT.
4. APPLY FERTILIZER WITH A DROP-TYPE SPREADER. USE OF BROADCAST SPREADERS OR HAND SPREADING IS NOT ACCEPTABLE. IMMEDIATELY CLEAN UP ANY AREA WHERE FERTILIZER HAS BEEN ACCIDENTALLY DROPPED ONTO PAVEMENT.
5. DO NOT APPLY FERTILIZER OUTSIDE THE GROWING SEASON DEFINED AS APRIL 15TH TO OCTOBER 31ST.
6. NO NITROGEN OR PHOSPHATE SHALL BE APPLIED DURING RAINFALL OR BEFORE PREDICTION OF RAIN.
7. SUBSTITUTIONS FOR SPECIES/SIZES WILL NOT BE APPROVED IF THE PLANT MATERIAL IS AVAILABLE FROM A COMMERCIAL NURSERY WITHIN A 50 MILE RADIUS OF THE SITE. THE CONTRACTOR IS OBLIGATED TO PURCHASE MATERIAL FROM MORE THAN ONE VENDOR, IF NECESSARY TO OBTAIN THE SPECIFIED SPECIES AND SIZES.
8. THE CONTRACTOR SHALL SUPPLY FRESHLY DUG MATERIAL IF AVAILABLE.
9. IF PLANTING OCCURS IN THE FALL, THE LANDSCAPE ARCHITECT SHALL HAVE THE OPTION OF SUBSTITUTING FOR FALL HAZARD SPECIES IN LIEU OF ACCEPTING ABOVE GROUND SPRING DUG MATERIAL.
10. ALL PLANT MATERIAL MUST BE APPROVED BY THE LANDSCAPE ARCHITECT AT THE NURSERY PRIOR TO SHIPMENT TO THE SITE.
11. NOTIFY THE LANDSCAPE ARCHITECT AT LEAST 2 WEEKS BEFORE NURSERY TAGGING IS SCHEDULED.

0 20 40 60

Carolyn Cooney & Associates
Landscape Architecture / Planning
13 Elm Street, Milford, MA 01757
Telephone 508 478 8426, Facsimile 508 478 8607

Site Engineering Consultants, Inc.
55 Grape Shot Road
Sharon, Massachusetts 02067
TEL: (781) 784-0326
FAX: (781) 784-0492
CONSULTING CIVIL ENGINEERS

MASSACHUSETTS CAROLYN COONEY LANDSCAPE ARCHITECT No. 739
Carolyn Cooney 10-23-17

No.	Description	Date

REVISIONS

North

Project:

CITY OF WALTHAM
GRAVERSON PLAYGROUND
16 PINE VALE ROAD
WALTHAM, MA 02451

Prepared For:

CITY OF WALTHAM
DEPARTMENT OF RECREATION
510 MOODY STREET
WALTHAM, MA 02453

TITLE:

PLANTING PLAN

Scale	1"=20'	Date	OCT 31, 2017
Drawn By	CCC		
Checked By	DRB		
Approved By	CCC		
Project No.	1710.00		

DWG No. L.501

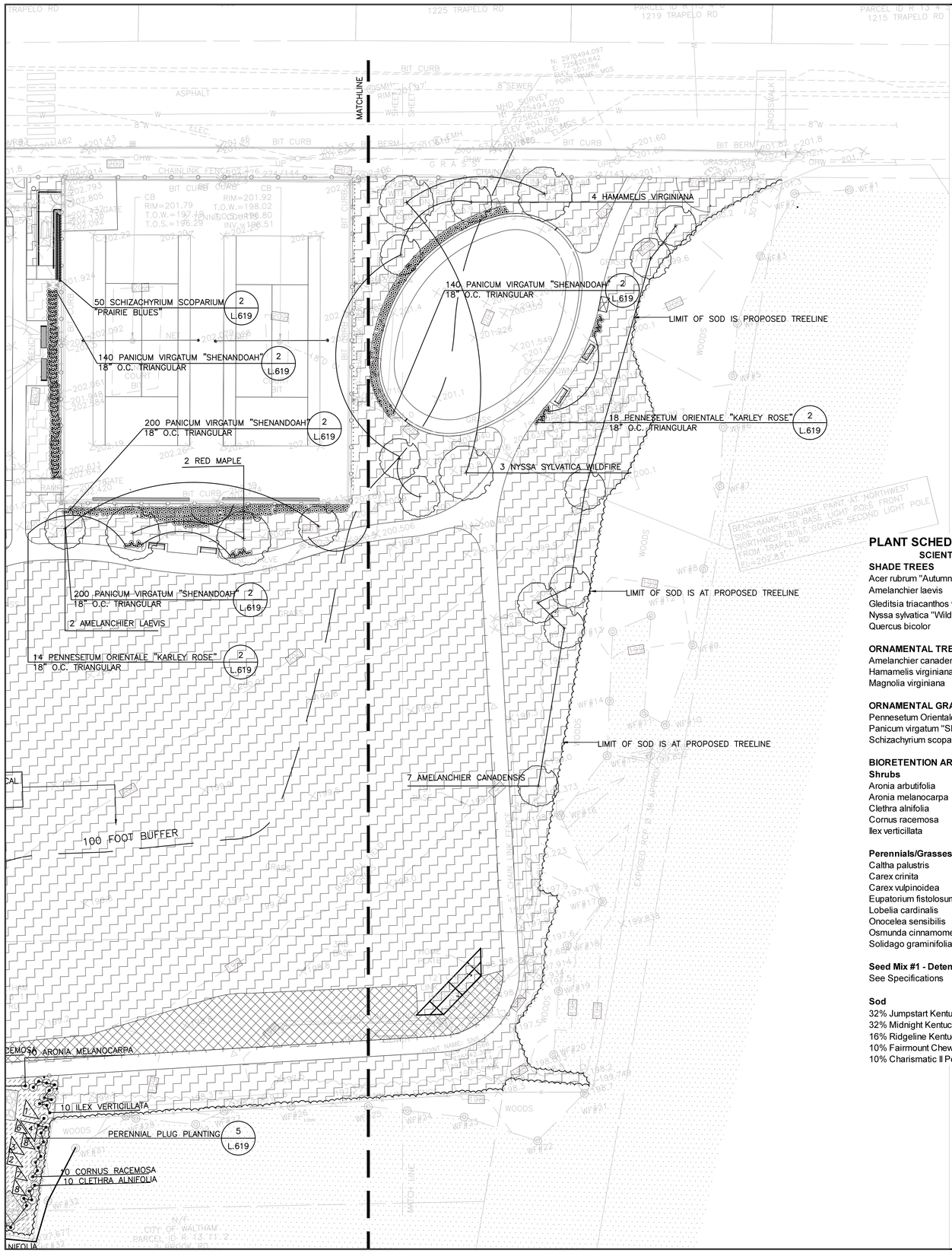

LEGEND

- SOD
- BIODETENTION BASIN MIX #1 – MOWABLE
- BIODETENTION BASIN MIX #2 – NO MOW
- EXISTING TREE TO REMAIN
- PROPOSED TREE
- PROPOSED SHRUBS OR ORNAMENTAL GRASS

REFER TO L.502 FOR PLANT SCHEDULE.

PLANTING NOTES: REFER TO SHEET L.501

PLANT SCHEDULE

SCIENTIFIC NAME	SYMBOL	COMMON NAME	SIZE	SPACING	QUANTITY	COMMENTS
SHADE TREES						
Acer rubrum "Autumn Blaze"		Red Maple "Autumn Blaze"	3 to 3-1/2" Caliper	As Shown	5	Amended loam backfill
Amelanchier laevis		Allegheny Serviceberry	2-1/2 to 3" Caliper	As Shown	2	Amended loam backfill
Gleditsia triacanthos var. inermis "Skyline"		Skyline Honey Locust	2-1/2 to 3" Caliper	As Shown	8	Amended loam backfill
Nyssa sylvatica "Wildfire"		Black Gum	2 to 2-1/2" Caliper	As shown	3	Amended loam backfill
Quercus bicolor		Swamp White Oak	3 to 3-1/2" Caliper	As Shown	5	Amended loam backfill
						Amended loam backfill
						Amended loam backfill
ORNAMENTAL TREES						
Amelanchier canadensis		Shadblow Serviceberry	#10	As Shown	7	Amended loam backfill
Hamamelis virginiana		Witch Hazel	#7 pot	As Shown	4	Amended loam backfill
Magnolia virginiana		Sweetbay Magnolia	10'-12' Ht.; Multistem	As Shown	4	Amended loam backfill
ORNAMENTAL GRASS						
Pennesetum Orientale "Karley Rose"		Karley Rose Fountain Grass	#2	As Shown	32	Amended loam backfill
Panicum virgatum "Shenandoah"		Red Switchgrass	#2	As Shown	480	Amended loam backfill
Schizachyrium scoparium "Prairie Blues"		Little Bluestem "Prairie Blues"	#2	As Shown	50	Amended loam backfill
BIORETENTION AREA PLANTING						
Shrubs						
Aronia arbutifolia		Red Chokeberry	18-24" ht - 1 Gallon	3' o.c. triangular	40	Amended loam backfill
Aronia melanocarpa		Black Chokeberry	18-24" ht - 1 Gallon	3' o.c. triangular	50	Amended loam backfill
Clethra alnifolia		Sweet Pepperbush	18-24" ht - 1 Gallon	3' o.c. triangular	50	Amended loam backfill
Cornus racemosa		GrayTwig Dogwood	18-24" ht - 1 Gallon	3' o.c. triangular	60	Amended loam backfill
Ilex verticillata		Winterberry Holly	18-24" ht - 3 Gallon	3' o.c. triangular	40	Amended loam backfill
					240	
Perennials/Grasses						
Caltha palustris	1	Marsh Marigold	2" plug	12" o.c. triangular	160	8 groups/20 per group
Carex crinita	2	Fringed Sedge	2" plug	12" o.c. triangular	160	8 groups/20 per group
Carex vulpinoidea	3	Fox Sedge	2" plug	12" o.c. triangular	160	8 groups/20 per group
Eupatorium fistolosum	4	Joe Pye Weed	2" plug	24" o.c. triangular	48	8 groups/6 per group
Lobelia cardinalis	5	Cardinal Flower	2" plug	12" o.c. triangular	48	8 groups/6 per group
Onocelea sensibilis	6	Sensitive Fern	2" plug	12" o.c. triangular	48	8 groups/6 per group
Osmunda cinnamomea	7	Cinnamon Fern	2" plug	12" o.c. triangular	48	8 groups/6 per group
Solidago graminifolia	8	Grass-leaved Goldenrod	2" plug	18" o.c. triangular	24	8 groups/3 per group

Seed Mix #1 - Detention Basin Mix
See Specifications

Sod
32% Jumpstart Kentucky Bluegrass
32% Midnight Kentucky Bluegrass
16% Ridgeline Kentucky Bluegrass
10% Fairmount Chewings Fescue
10% Charismatic II Perennial Ryegrass

0 20 40 60

Carolyn Cooney & Associates
Landscape Architecture / Planning
13 Elm Street, Milford, MA 01757
Telephone 508 478 8426, Facsimile 508 478 8607

Site Engineering Consultants, Inc.
55 Grape Shot Road
Sharon, Massachusetts 02067
TEL: (781) 784-0326
FAX: (781) 784-0492
CONSULTING CIVIL ENGINEERS

10-23-17

No.	Description	Date

REVISIONS

North

Project:

CITY OF WALTHAM
CRAVERSON PLAYGROUND
16 PINE VALE ROAD
WALTHAM, MA 02451

Prepared For:

CITY OF WALTHAM
DEPARTMENT OF RECREATION
510 MOODY STREET
WALTHAM, MA 02453

TITLE:

PLANTING PLAN

Scale 1"=20' Date OCT 31, 2017
Drawn By CCC
Checked By DRB
Approved By CCC
Project No. 1710.00

DWG No. L.502

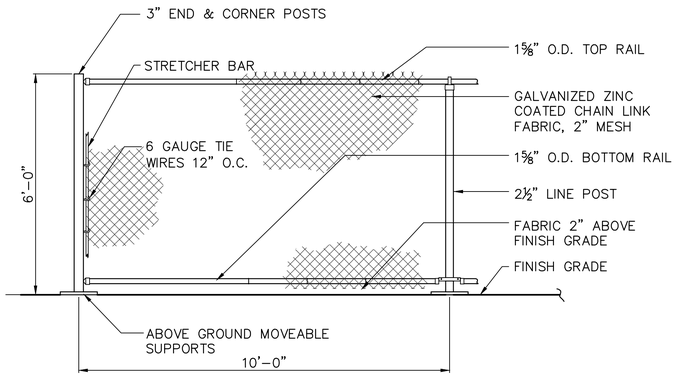

ELEVATION

1 TEMPORARY CONSTRUCTION FENCE
3" = 1'-0"

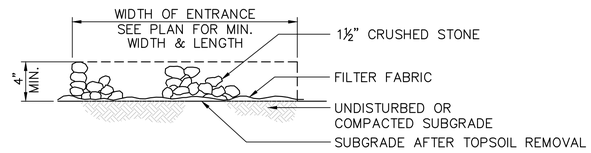

SECTION

2 TEMPORARY CONSTRUCTION ENTRANCE
N.T.S.

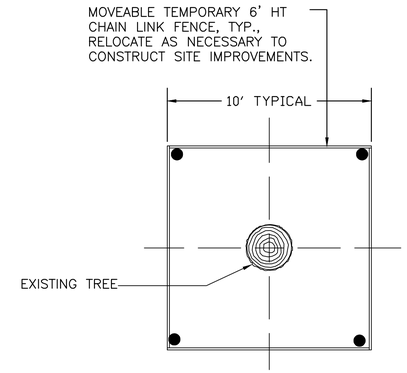

PLAN

3 TREE PROTECTION DETAIL
N.T.S.

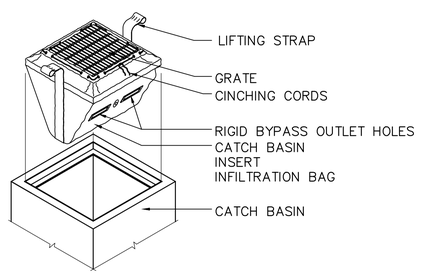

ISOMETRIC

4 CATCH BASIN INSERT
N.T.S.

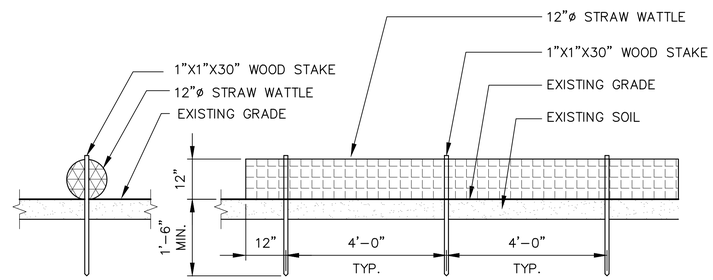

SECTION

5 STRAW WATTLE DETAIL
N.T.S.

Carolyn Cooney & Associates
Landscape Architecture / Planning
13 Elm Street, Milford, MA 01757
Telephone 508 478 8426, Facsimile 508 478 8607

Site Engineering Consultants, Inc.
55 Grape Shot Road
Sharon, Massachusetts 02067
TEL: (781) 784-0326
FAX: (781) 784-0492
CONSULTING CIVIL ENGINEERS

No.	Description	Date

REVISIONS

Project:

CITY OF WALTHAM
GRAVERSON PLAYGROUND
16 PINE VALE ROAD
WALTHAM, MA 02451

Prepared For:

CITY OF WALTHAM
DEPARTMENT OF RECREATION
510 MOODY STREET
WALTHAM, MA 02453

TITLE:

SITE PREPARATION DETAILS

Scale	AS NOTED	Date	OCT 31, 2017
Drawn By	CCC		
Checked By	DRB		
Approved By	VH		
Project No.	1710.00		

DWG No. L.601

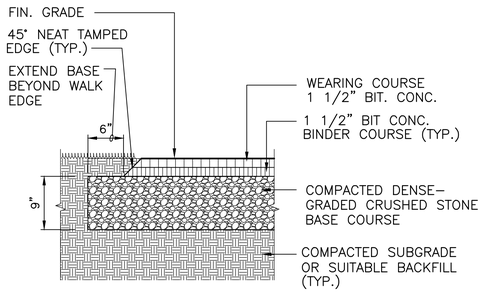

SECTION

1 BIT. CONC. PAVING TYPE 1 – WALKWAYS
SCALE: 1" = 1'-0"

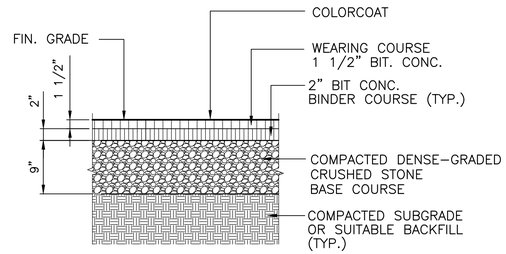

SECTION

2 BIT. CONC. PAVING TYPE 2 – BBALL COURT & SKATE & SCOOT
SCALE: 1" = 1'-0"

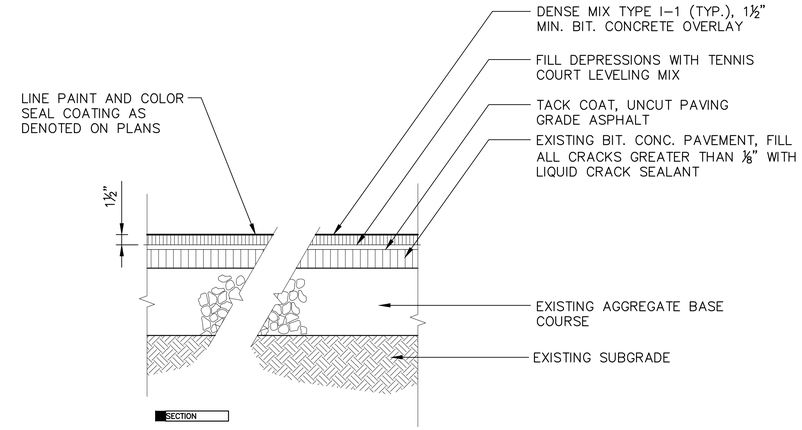

SECTION

3 BITUMINOUS CONCRETE OVERLAY AT TENNIS COURT
SCALE: NTS

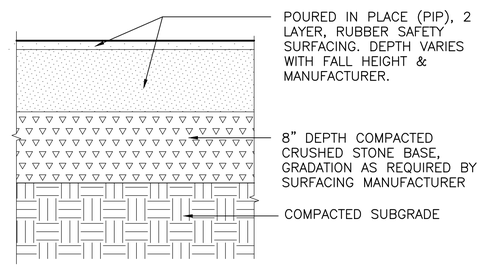

SECTION

5 POURED IN PLACE SAFETY SURFACING
SCALE: 3" = 1'-0"

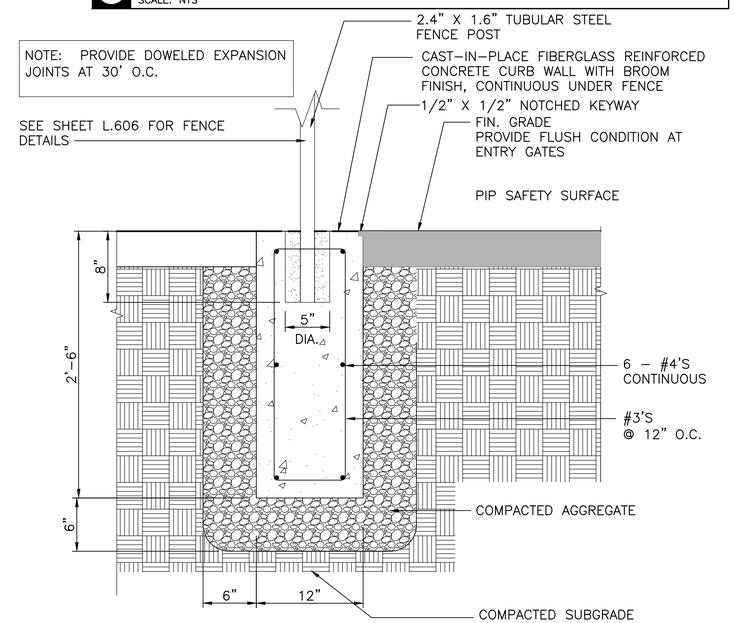

SECTION

6 CURVED CONCRETE CURB WALL WITH WELDED WIRE FENCE
1-1/2" = 1'-0"

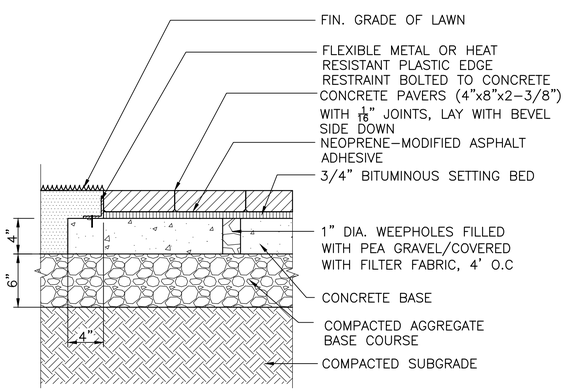

SECTION

7 PRECAST PAVERS ON CONCRETE BASE
SCALE: 1-1/2" = 1'-0"

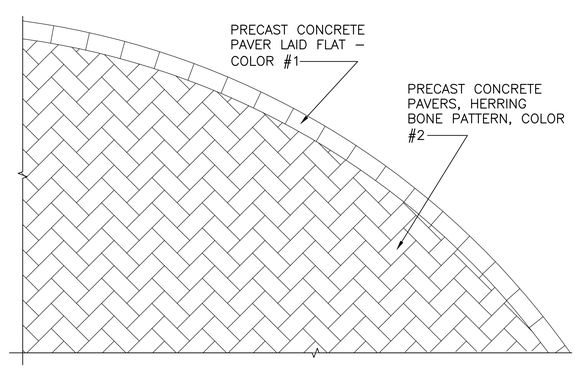

PLAN

8 PRECAST PAVER TYPICAL PATTERN
SCALE: 3/4" = 1'-0"

Carolyn Cooney & Associates
Landscape Architecture / Planning
13 Elm Street, Milford, MA 01757
Telephone 508 478 8426, Facsimile 508 478 8607

Site Engineering Consultants, Inc.
55 Grape Shot Road
Sharon, Massachusetts 02067
TEL: (781) 784-0326
FAX: (781) 784-0492
CONSULTING CIVIL ENGINEERS

No.	Description	Date

REVISIONS

Project:

CITY OF WALTHAM
GRAVERSON PLAYGROUND
16 PINE VALE ROAD
WALTHAM, MA 02451

Prepared For:

CITY OF WALTHAM
DEPARTMENT OF RECREATION
510 MOODY STREET
WALTHAM, MA 02453

TITLE:

PAVING & CURBING

Scale AS NOTED Date OCT 31, 2017
Drawn By CCC
Checked By DRB
Approved By VH
Project No. 1710.00

DWG No. L.602

657

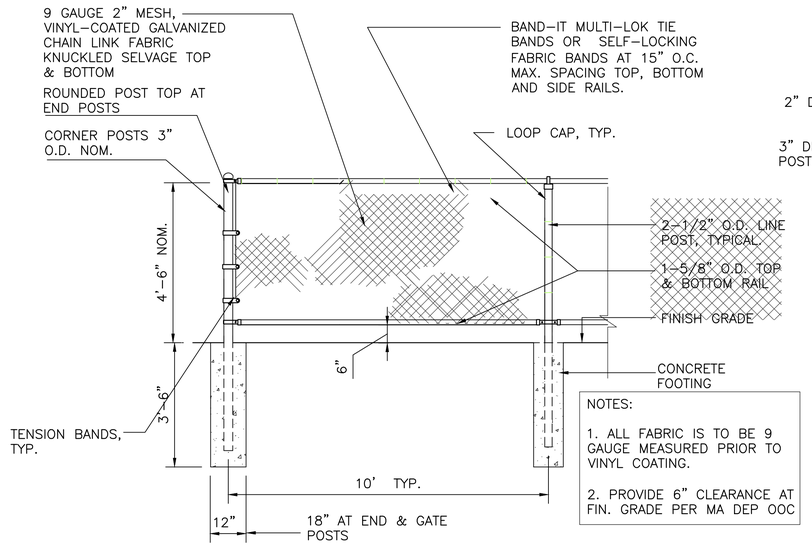

SECTIONAL ELEVATION

1 4' HT. CHAIN LINK FENCE AT BIODETENTION BASINS
SCALE: 1/2" = 1'–0"

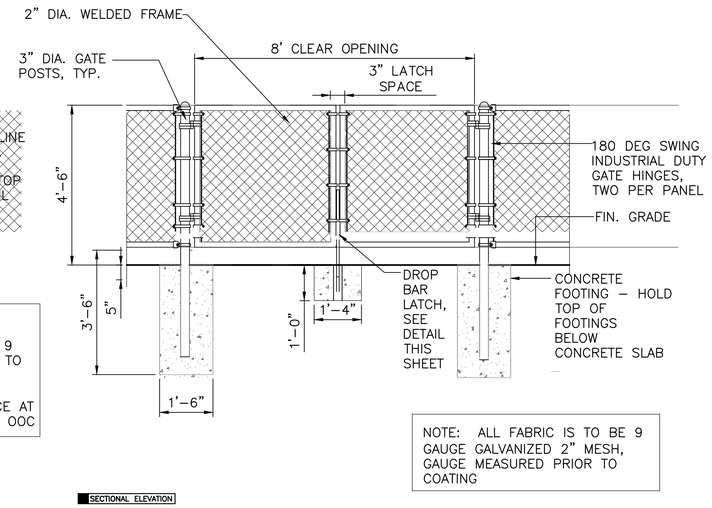

SECTIONAL ELEVATION

2 DOUBLE GATES AT BIODETENTION AREAS
SCALE: 1/2" = 1'–0"

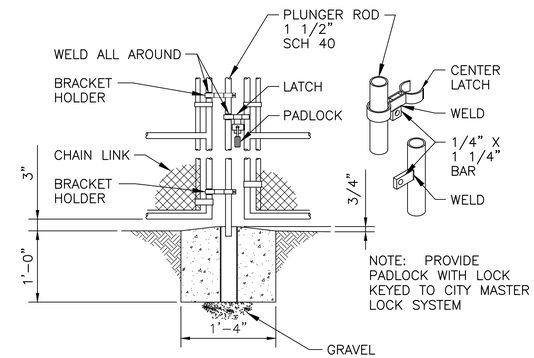

SECTIONAL ELEVATION

3 CLF GATE LATCH DETAIL
SCALE: NTS

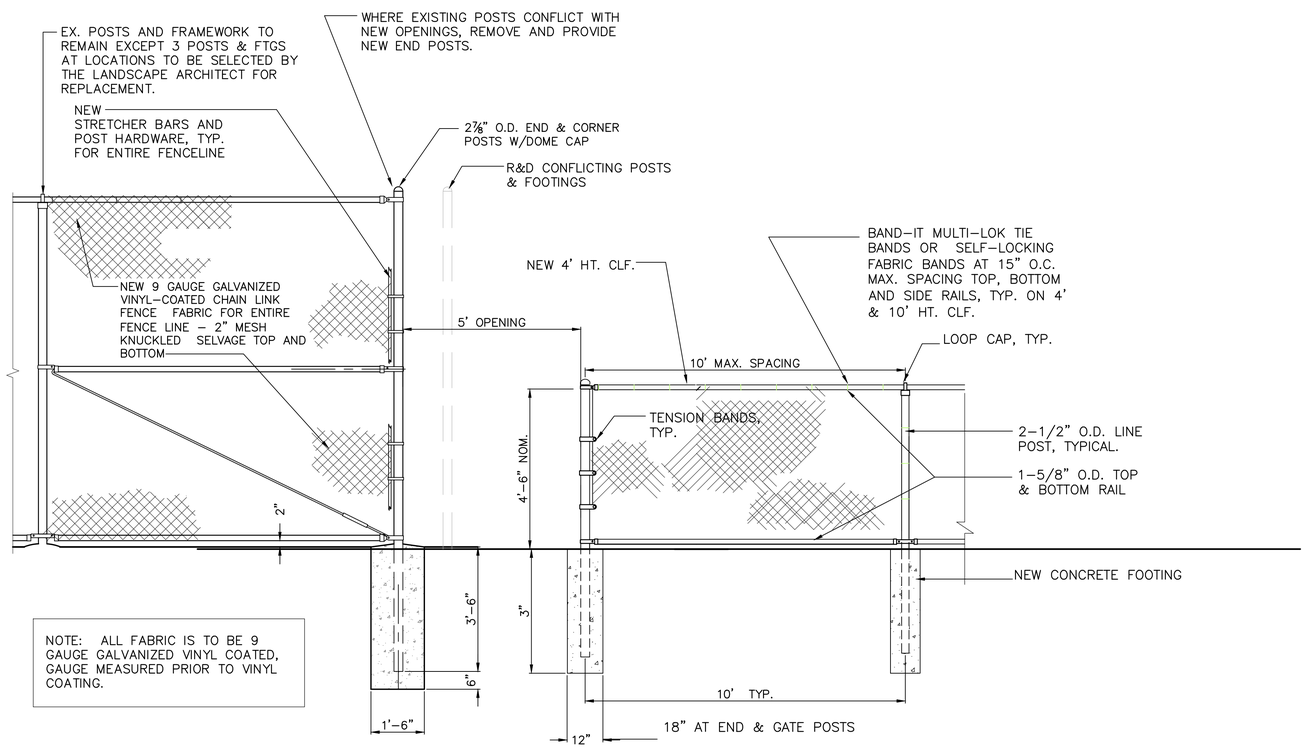

SECTIONAL ELEVATION

4 MODIFICATIONS TO EXISTING 10' HT CHAIN LINK FENCE/NEW 4' HT. CLF.
SCALE: 1/2" = 1'–0"

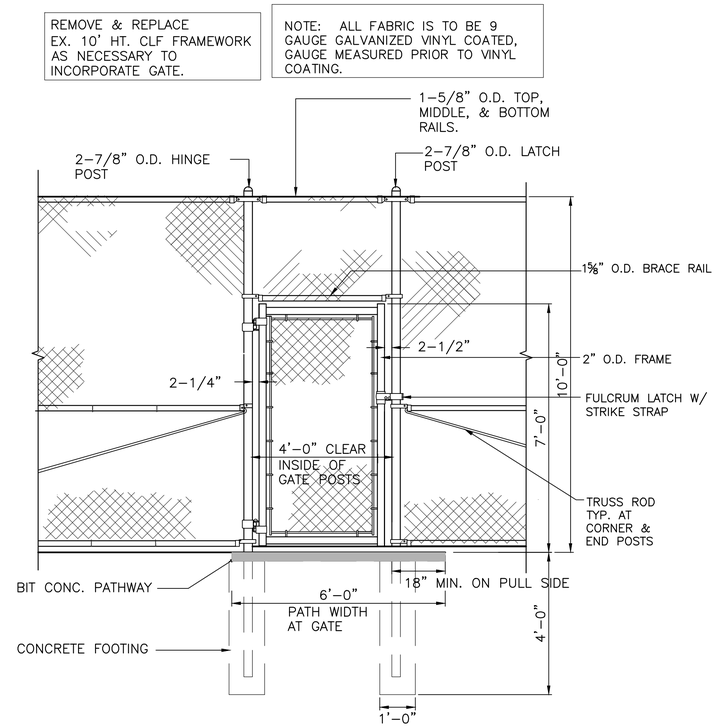

SECTIONAL ELEVATION

5 NEW GATE IN 10' HT. CLF.
SCALE: 1/2" = 1'–0"

Carolyn Cooney & Associates
Landscape Architecture / Planning
13 Elm Street, Milford, MA 01757
Telephone 508 478 8426, Facsimile 508 478 8607

Site Engineering Consultants, Inc.
55 Grape Shot Road
Sharon, Massachusetts 02067
TEL: (781) 784-0326
FAX: (781) 784-0492
CONSULTING CIVIL ENGINEERS

No.	Description	Date

REVISIONS

Project:

CITY OF WALTHAM
GRAVERSON PLAYGROUND
16 PINE VALE ROAD
WALTHAM, MA 02451

Prepared For:

CITY OF WALTHAM
DEPARTMENT OF RECREATION
510 MOODY STREET
WALTHAM, MA 02453

TITLE:

CHAIN LINK FENCE DETAILS

Scale	AS NOTED	Date	OCT 31, 2017
Drawn By	CCC		
Checked By	DRB		
Approved By	VH		
Project No.	1710.00		

DWG No. L.603

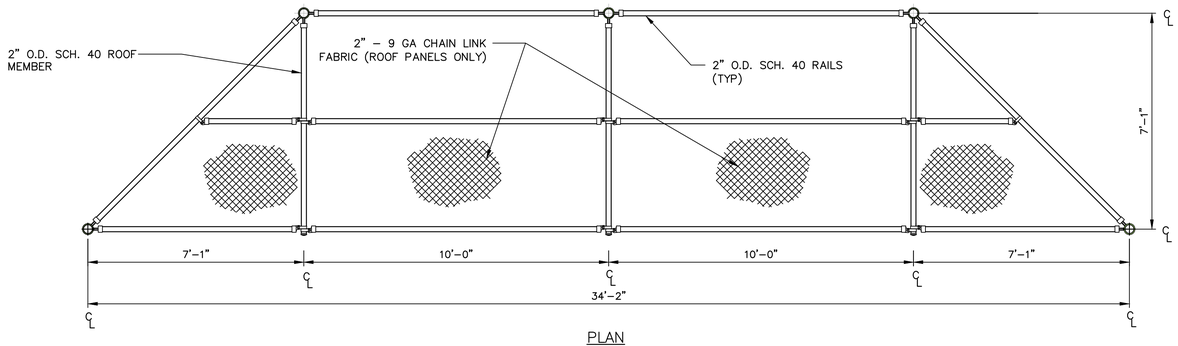

PLAN

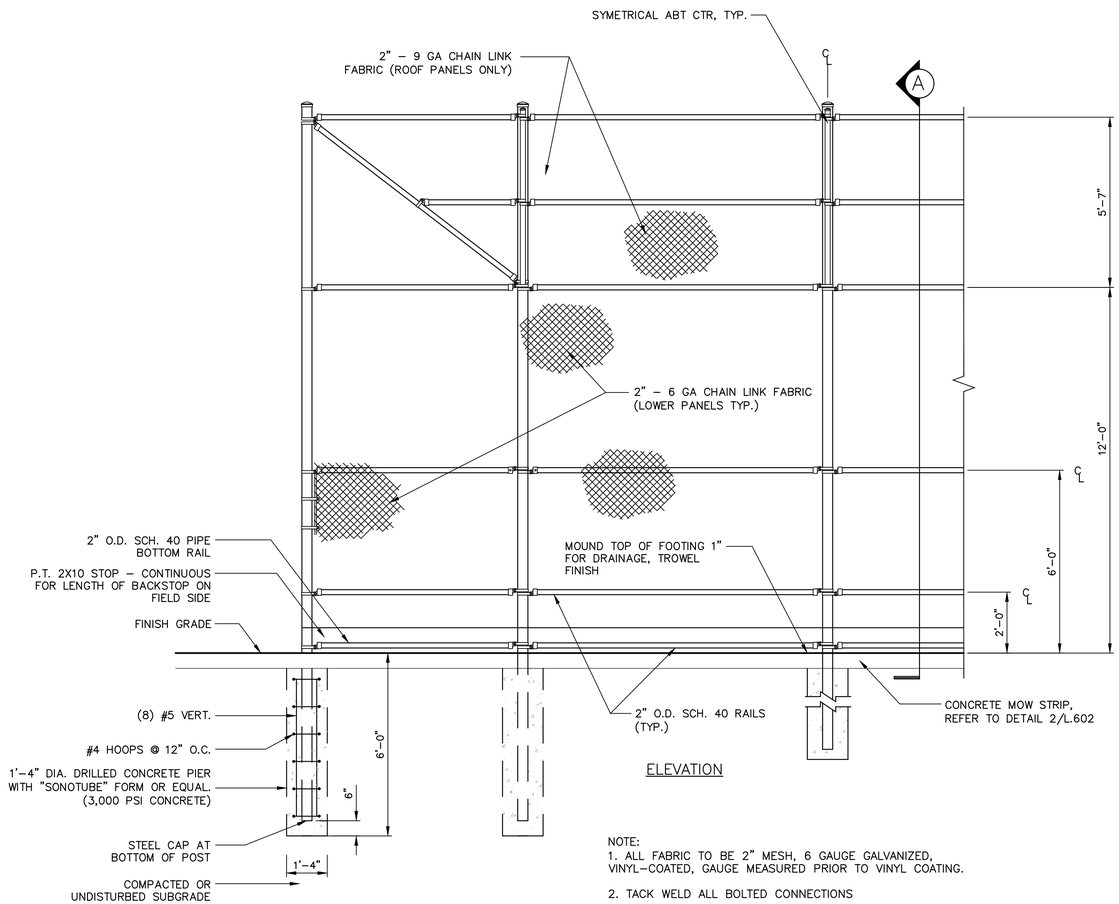

ELEVATION

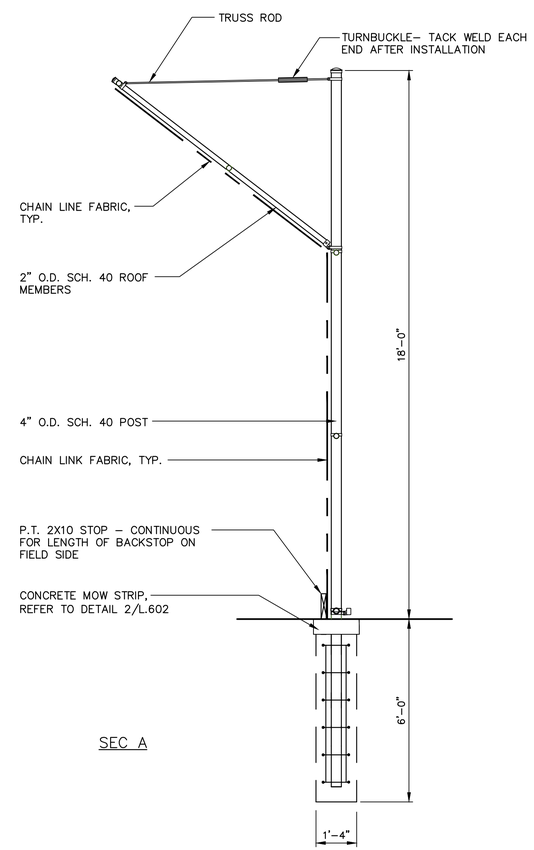

SEC A

NOTE:
1. ALL FABRIC TO BE 2" MESH, 6 GAUGE GALVANIZED, VINYL–COATED, GAUGE MEASURED PRIOR TO VINYL COATING.

2. TACK WELD ALL BOLTED CONNECTIONS

1 BASEBALL BACKSTOP
SCALE: NTS

Carolyn Cooney & Associates
Landscape Architecture / Planning
13 Elm Street, Milford, MA 01757
Telephone 508 478 8426, Facsimile 508 478 8607

Site Engineering Consultants, Inc.
55 Grape Shot Road
Sharon, Massachusetts 02067
TEL: (781) 784–0326
FAX: (781) 784–0492
CONSULTING CIVIL ENGINEERS

No.	Description	Date

REVISIONS

Project:

CITY OF WALTHAM
GRAVERSON PLAYGROUND
16 PINE VALE ROAD
WALTHAM, MA 02451

Prepared For:

CITY OF WALTHAM
DEPARTMENT OF RECREATION
510 MOODY STREET
WALTHAM, MA 02453

TITLE:

BACKSTOP DETAILS

Scale AS NOTED Date OCT 31, 2017
Drawn By CCC
Checked By DRB
Approved By VH
Project No. 1710.00

DWG No. L.604

NOTE: DETAIL SHOWS CONDITION AT MAINTENANCE GATE AT PARKING LOT. FOR MAINTENANCE GATE ON TRAPELO, BRING NEW 4' CHAIN LINK FENCE POSTS TIGHT TO GATE POSTS TO PREVENT PEDESTRIAN OR VEHICULAR ENTRY.

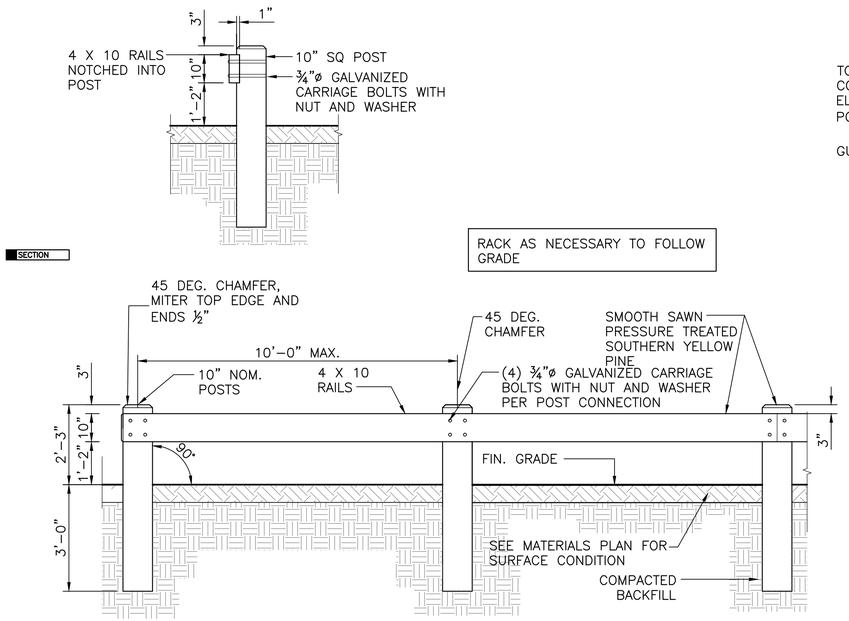

1 WOOD GUARDRAIL
SCALE: 1/2" = 1'-0"

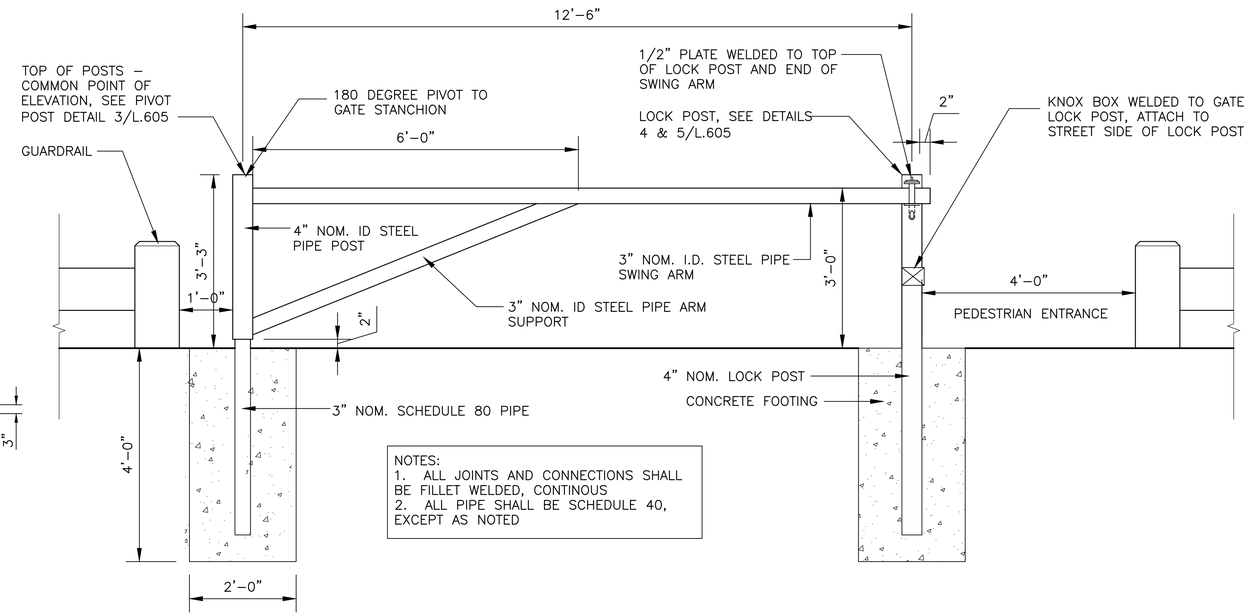

NOTES:
1. ALL JOINTS AND CONNECTIONS SHALL BE FILLET WELDED, CONTINOUS
2. ALL PIPE SHALL BE SCHEDULE 40, EXCEPT AS NOTED

2 STEEL MAINTENANCE GATE WITH KNOX BOX
SCALE: 3/4" = 1'-0"

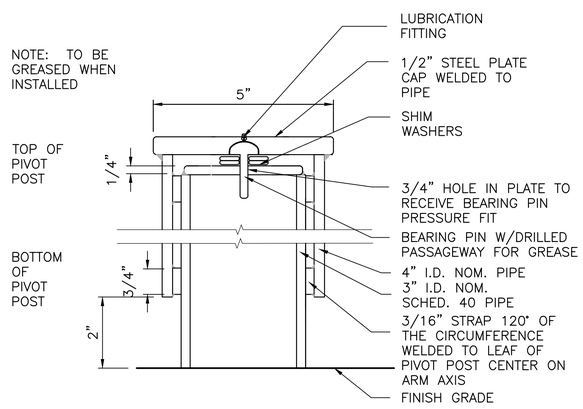

3 PIVOT POST DETAIL
SCALE: HALF SIZE

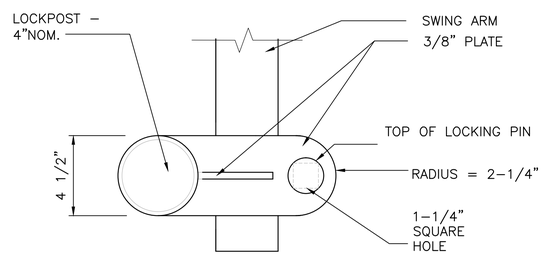

NOTE: PROVIDE STANCHION POST AT 180, IDENTICAL TO LOCK POST EXCEPT FOR ORIENTATION.

4 LOCKPOST AND STANCHION POST
SCALE: ONE QUARTER SIZE

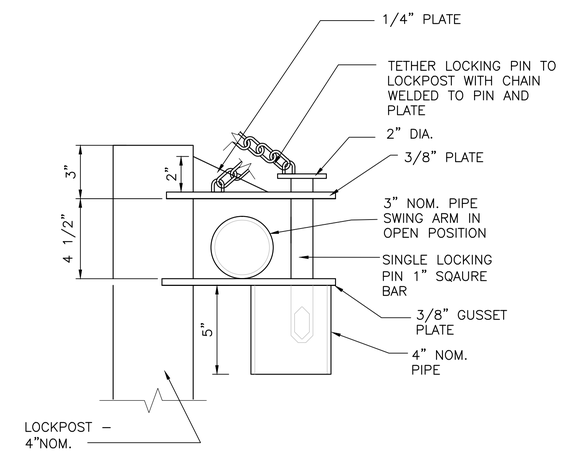

5 LOCKPOST DETAIL
SCALE: ONE QUARTER SIZE

Carolyn Cooney & Associates
Landscape Architecture / Planning
13 Elm Street, Milford, MA 01757
Telephone 508 478 8426, Facsimile 508 478 8607

Site Engineering Consultants, Inc.
55 Grape Shot Road
Sharon, Massachusetts 02067
TEL: (781) 784-0326
FAX: (781) 784-0492
CONSULTING CIVIL ENGINEERS

No.	Description	Date

REVISIONS

Project:

CITY OF WALTHAM
GRAVERSON PLAYGROUND
16 PINE VALE ROAD
WALTHAM, MA 02451

Prepared For:

CITY OF WALTHAM
DEPARTMENT OF RECREATION
510 MOODY STREET
WALTHAM, MA 02453

TITLE:

GUARDRAIL/GATE DETAILS

Scale AS NOTED Date OCT 31, 2017
Drawn By CCC
Checked By DRB
Approved By VH
Project No. 1710.00

DWG No. L.605

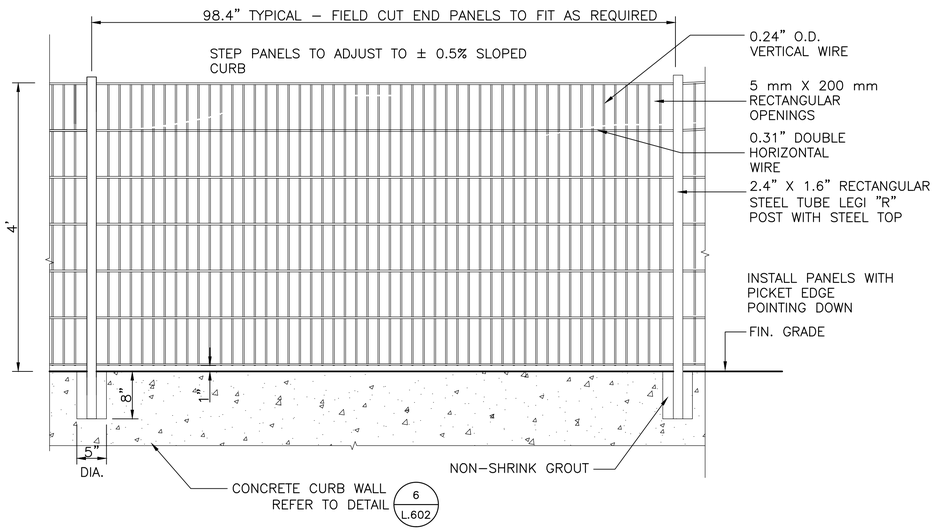

SECTIONAL ELEVATION

1 WELDED WIRE FENCE DETAIL
SCALE: 1" = 1'–0"

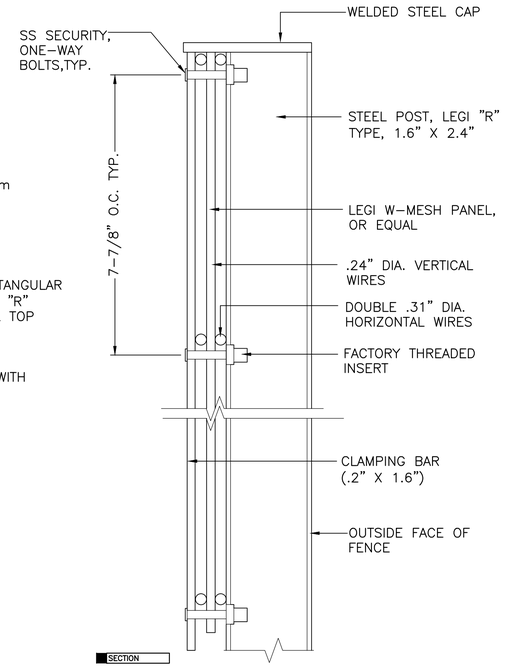

SECTION

2 FENCE POST SECTION
1/2 SIZE

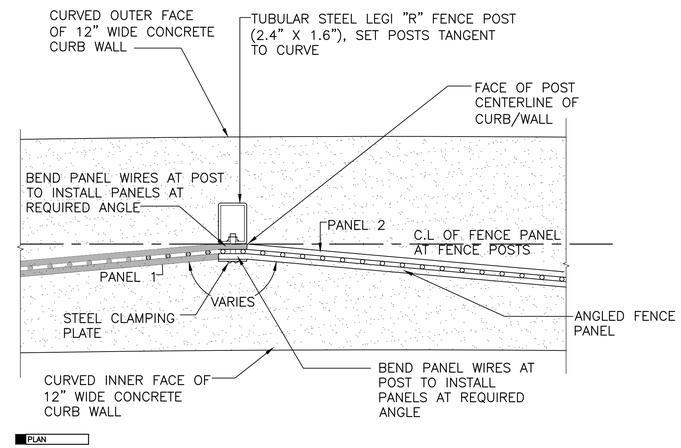

PLAN

3 TYPICAL ATTACHMENT DETAIL AT POSTS
SCALE: ONE QUARTER SIZE

NOTE: PROVIDE OWNER WITH 1 EXTRA LATCH & 1 EXTRA GATE STOP FOR EACH GATE

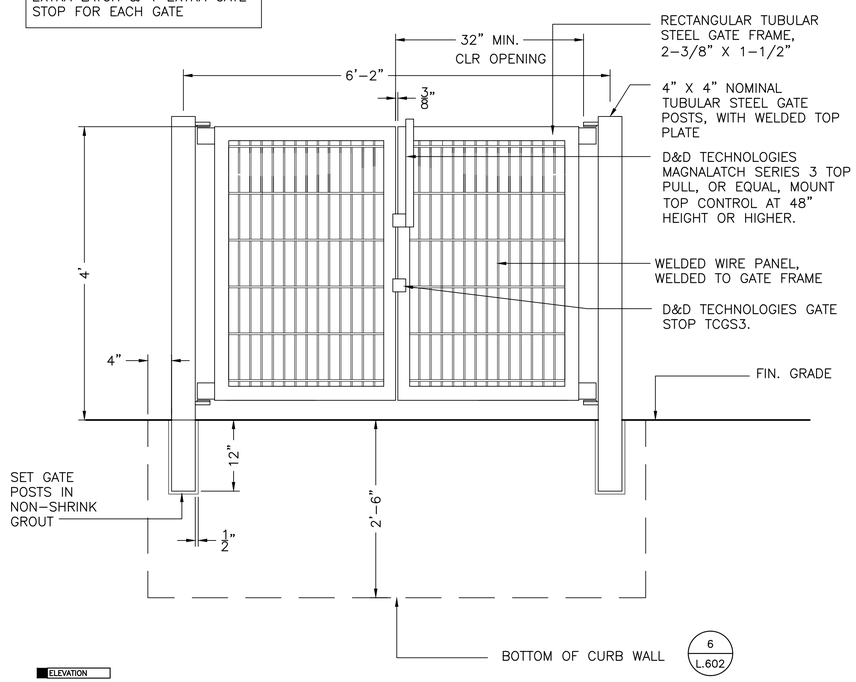

ELEVATION

4 DOUBLE GATE
1" = 1'–0"

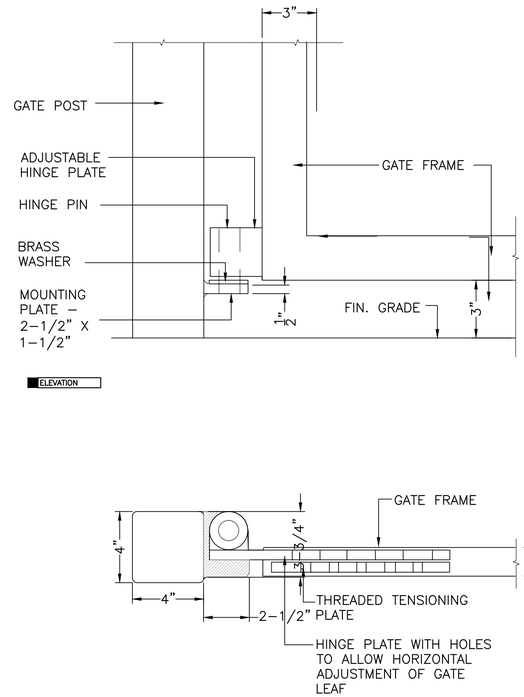

ELEVATION

PLAN

5 GATE HINGE DETAILS
SCALE: ONE QUARTER SIZE

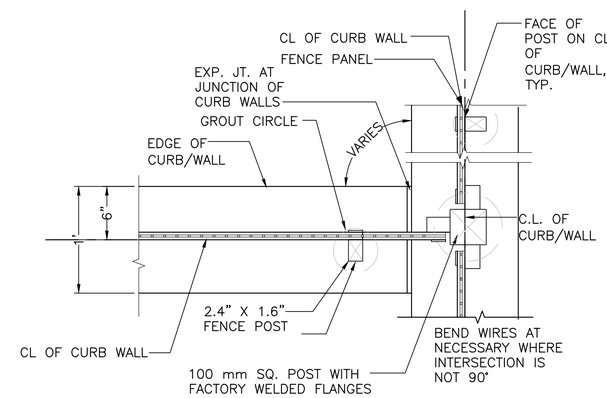

6 JUNCTION OF 3 PANELS
N.T.S.

Carolyn Cooney & Associates
Landscape Architecture / Planning
13 Elm Street, Milford, MA 01757
Telephone 508 478 8426, Facsimile 508 478 8607

Site Engineering Consultants, Inc.
55 Grape Shot Road
Sharon, Massachusetts 02067
TEL: (781) 784–0326
FAX: (781) 784–0492
CONSULTING CIVIL ENGINEERS

No.	Description	Date

REVISIONS

Project:

CITY OF WALTHAM
GRAVERSON PLAYGROUND
16 PINE VALE ROAD
WALTHAM, MA 02451

Prepared For:

CITY OF WALTHAM
DEPARTMENT OF RECREATION
510 MOODY STREET
WALTHAM, MA 02453

TITLE:

WELDED WIRE FENCE DETAILS

Scale AS NOTED Date OCT 31, 2017
Drawn By CCC
Checked By DRB
Approved By VH
Project No. 1710.00

DWG No. L.606

661

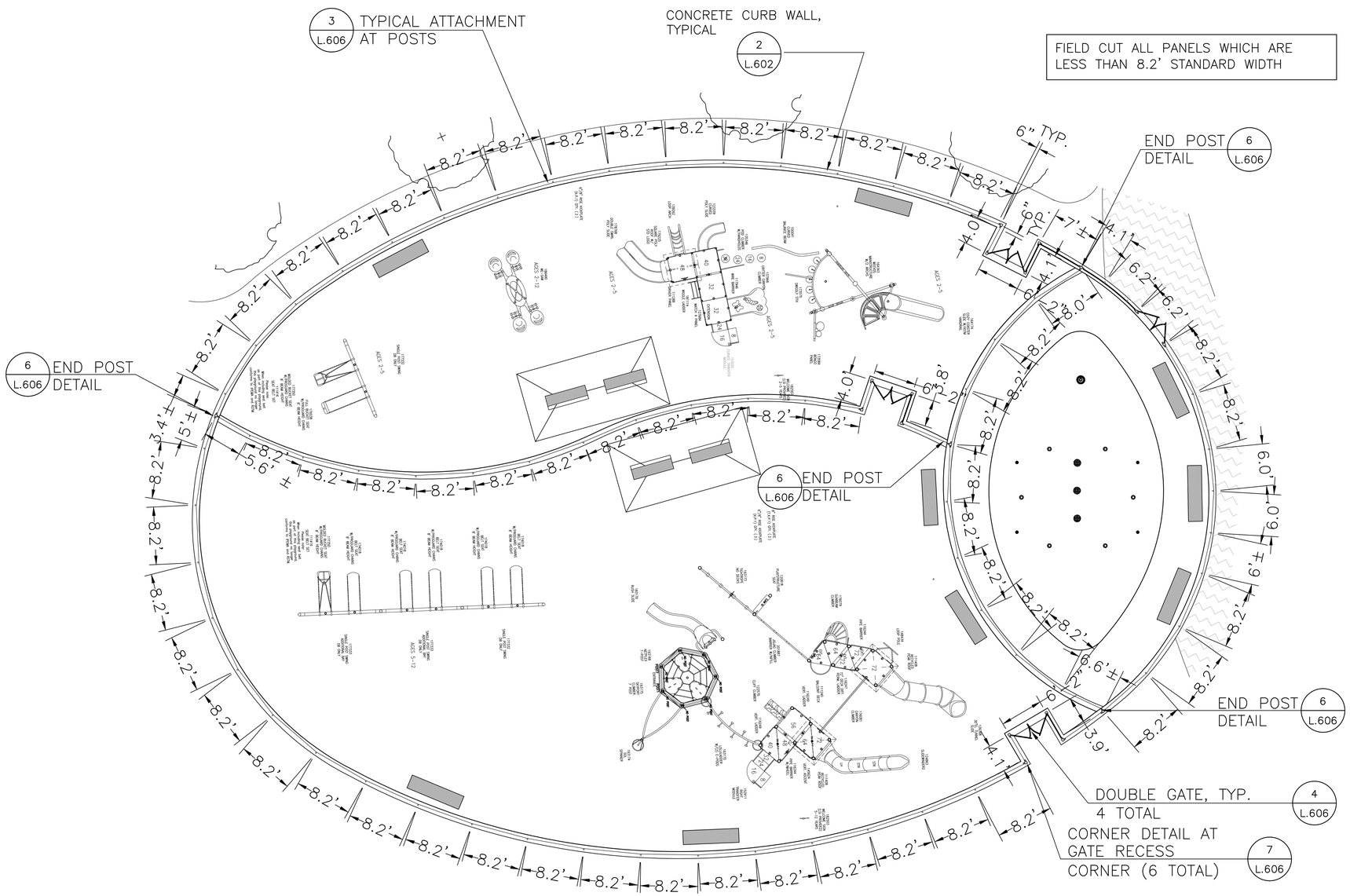

PLAN

2 FENCE PANEL LAYOUT ON CURVED CURB/WALL
SCALE: 1/8"=1'-0"

Carolyn Cooney & Associates
Landscape Architecture / Planning
13 Elm Street, Milford, MA 01757
Telephone 508 478 8426, Facsimile 508 478 8607

Site Engineering Consultants, Inc.
55 Grape Shot Road
Sharon, Massachusetts 02067
TEL: (781) 784-0326
FAX: (781) 784-0492
CONSULTING CIVIL ENGINEERS

No.	Description	Date

REVISIONS

North

Project:

CITY OF WALTHAM
GRAVERSON PLAYGROUND
16 PINE VALE ROAD
WALTHAM, MA 02451

Prepared For:

CITY OF WALTHAM
DEPARTMENT OF RECREATION
510 MOODY STREET
WALTHAM, MA 02453

TITLE:

WELDED WIRE FENCE PANEL LAYOUT

Scale EQUIPMENT DETAILS
Date OCT 31, 2017
Drawn By CCC
Checked By DRB
Approved By VH
Project No. 1710.00

DWG No. L.607

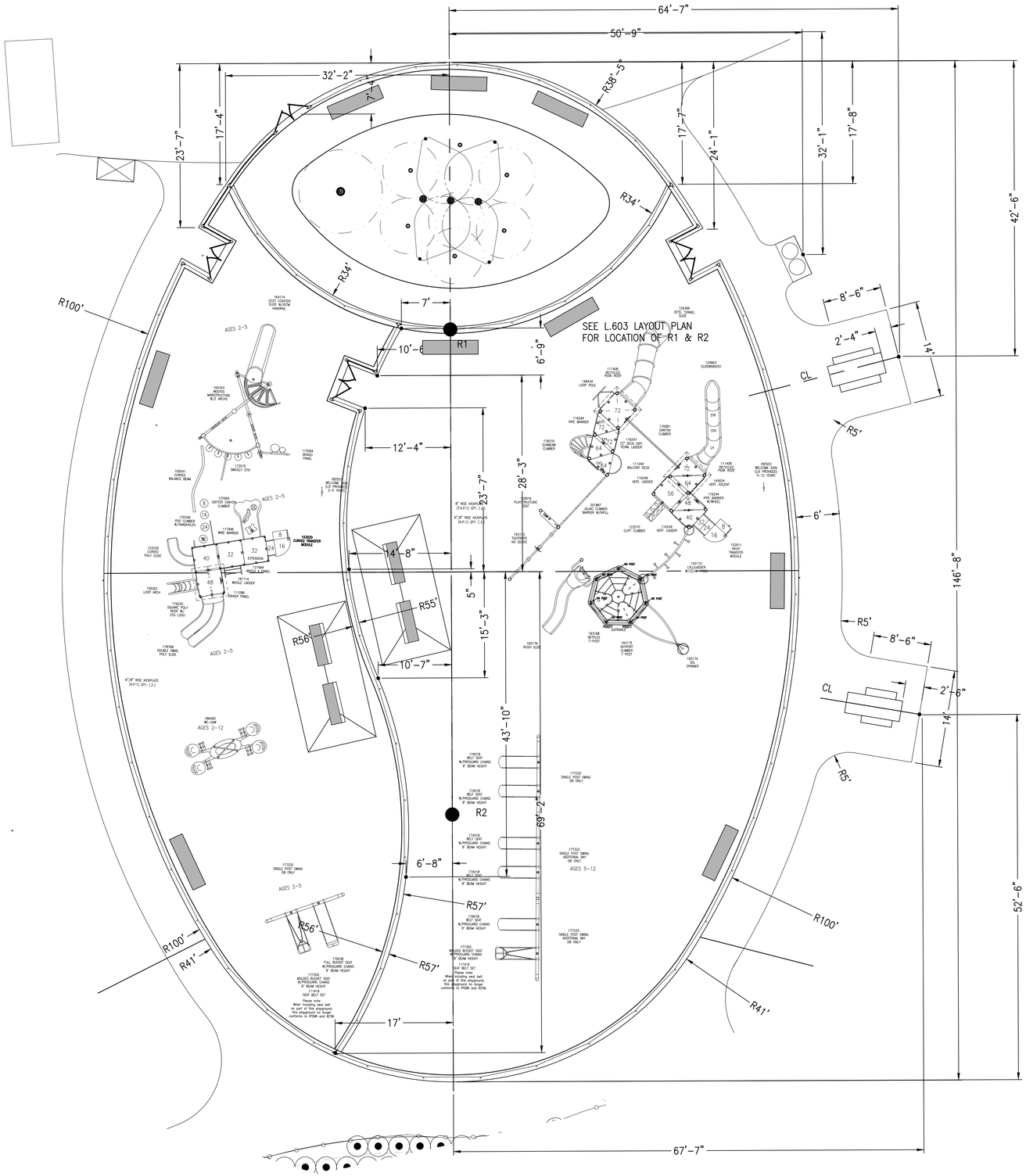

PLAN

1 LAYOUT ENLARGEMENT PLAN

SCALE: 1/8"=1'-0"

Carolyn Cooney & Associates

Landscape Architecture / Planning

13 Elm Street, Milford, MA 01757
Telephone 508 478 8426, Facsimile 508 478 8607

Site Engineering Consultants, Inc.
55 Grape Shot Road
Sharon, Massachusetts 02067
TEL: (781) 784-0326
FAX: (781) 784-0492
CONSULTING CIVIL ENGINEERS

No.	Description	Date

REVISIONS

North

Project:

CITY OF WALTHAM
GRAVERSON PLAYGROUND
16 PINE VALE ROAD
WALTHAM, MA 02451

Prepared For:

CITY OF WALTHAM
DEPARTMENT OF RECREATION
510 MOODY STREET
WALTHAM, MA 02453

TITLE:

PLAY AREA
CURB/FENCE LAYOUT

Scale AS NOTED Date OCT 31, 2017
Drawn By CCC
Checked By DRB
Approved By VH
Project No. 1710.00

DWG No. L.608

1. FOR LAYOUT OF PATH AND PICNIC TABLES REFER TO L.608.
2. BEGIN LAYOUT AT RADIUS PT R1 AND R2. REFER TO 3.01 FOR LAYOUT OF RADIUS POINTS.
3. SEE SPECIFICATIONS FOR DESCRIPTION OF PLAY EQUIPMENT
4. PLAY EQUIPMENT TO BE FURNISHED BY THE OWNER, TO BE INSTALLED BY THE CONTRACTOR.
5. SEE SPECIFICATION SECTION 01040 CONTROL OF THE WORK FOR A DESCRIPTION OF CONTRACTOR'S RESPONSIBILITIES RELATED TO OWNER FURNISHED MATERIALS.

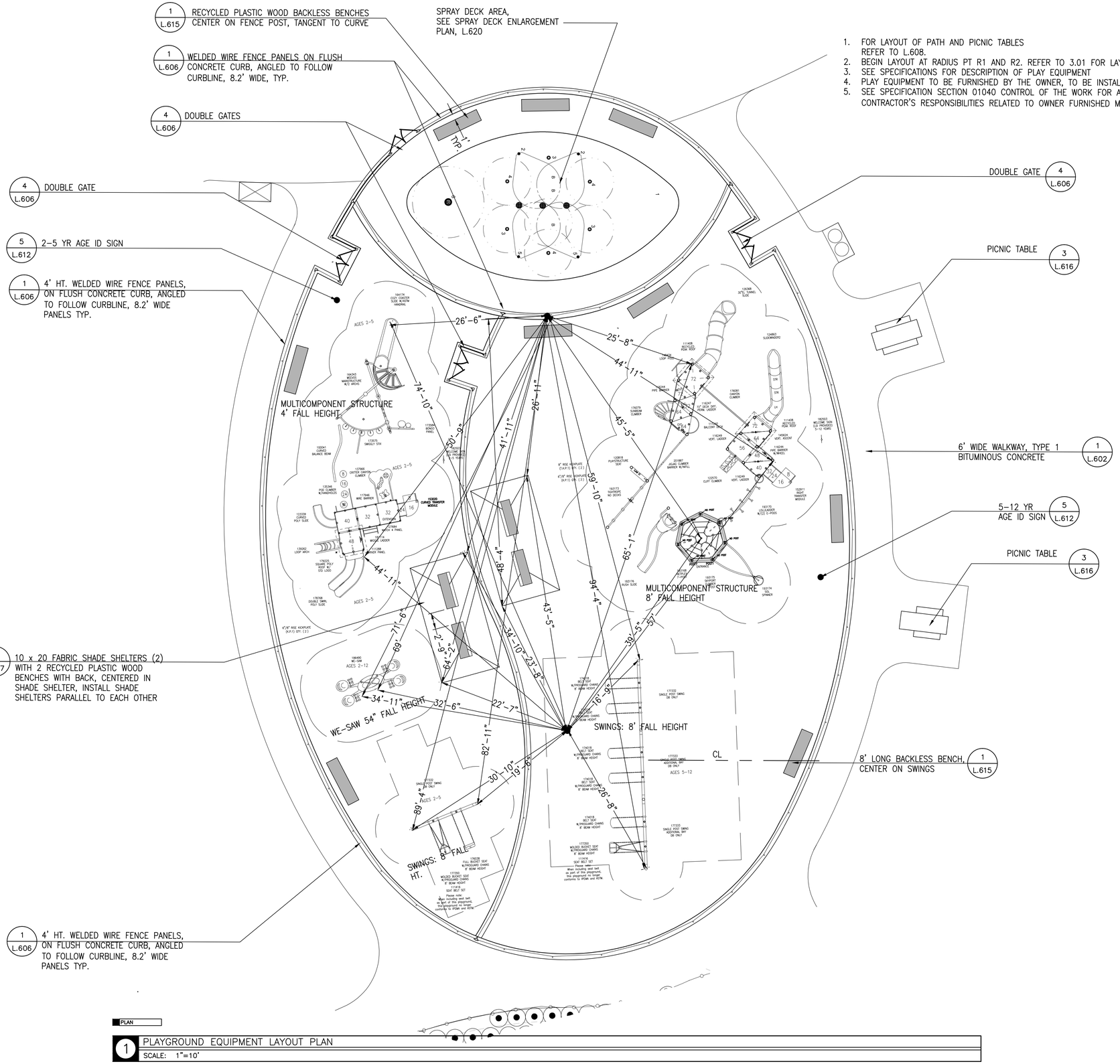

PLAN

1 PLAYGROUND EQUIPMENT LAYOUT PLAN
SCALE: 1"=10'

Carolyn Cooney & Associates
Landscape Architecture / Planning
13 Elm Street, Milford, MA 01757
Telephone 508 478 8426, Facsimile 508 478 8607

Site Engineering Consultants, Inc.
55 Grape Shot Road
Sharon, Massachusetts 02067
TEL: (781) 784-0326
FAX: (781) 784-0492
CONSULTING CIVIL ENGINEERS

No.	Description	Date

REVISIONS

North

Project:

CITY OF WALTHAM
GRAVERSON PLAYGROUND
16 PINE VALE ROAD
WALTHAM, MA 02451

Prepared For:

CITY OF WALTHAM
DEPARTMENT OF RECREATION
510 MOODY STREET
WALTHAM, MA 02453

TITLE:

PLAY AREA EQUIPMENT LAYOUT

Scale AS NOTED Date OCT 31, 2017
Drawn By CCC
Checked By DRB
Approved By VH
Project No. 1710.00

DWG No. L.609

FOOTING DETAILS ARE SUPPLIED TO ASSIST IN BIDDING CONCRETE QUANTITIES, AND TO SHOW GENERAL RELATIONSHIPS. REFER TO MANUFACTURER'S SHOP DRAWINGS AND INSTRUCTIONS TO CONFIRM DIMENSIONS PRIOR TO INSTALLATION. MANUFACTURER'S DIMENSIONS AND INSTRUCTIONS TAKE PRECENDENCE.

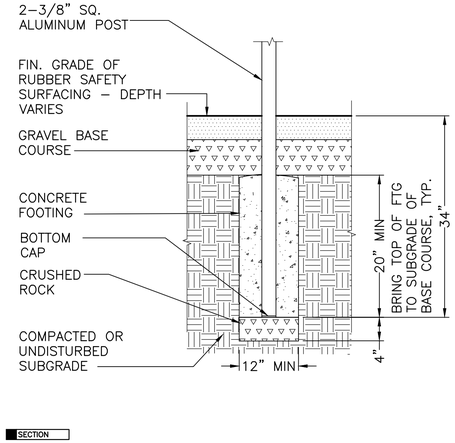

1 TYPICAL PLAY SHAPER FOOTING
SCALE: 1" = 1'-0"

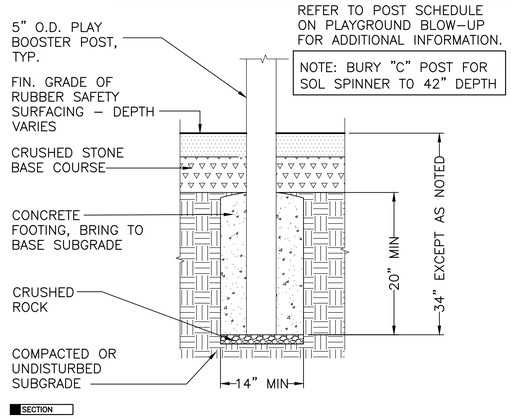

2 TYPICAL PLAY BOOSTER POST FOOTING
SCALE: 1" = 1'-0"

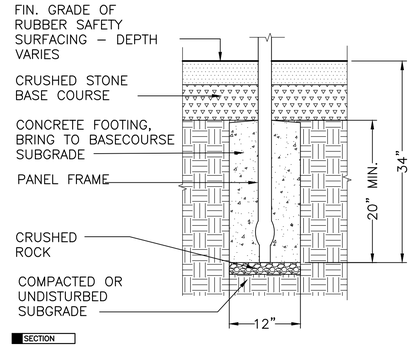

3 BONGO PANEL FOOTING
SCALE: 1" = 1'-0"

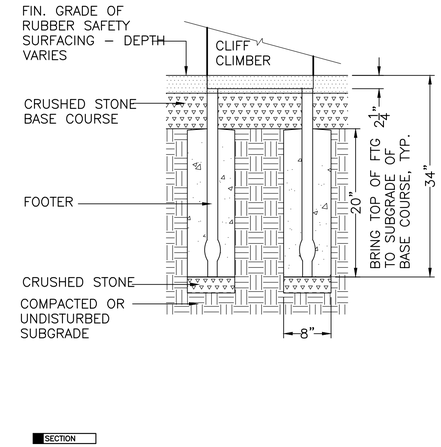

4 CLIFF CLIMBER
SCALE: 1" = 1'-0"

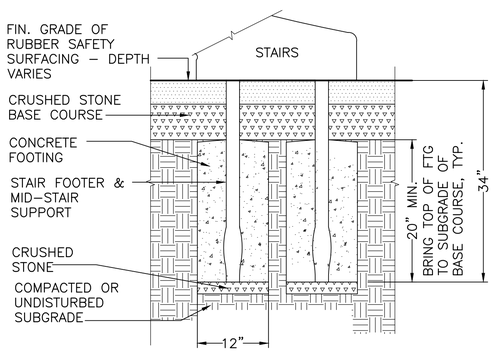

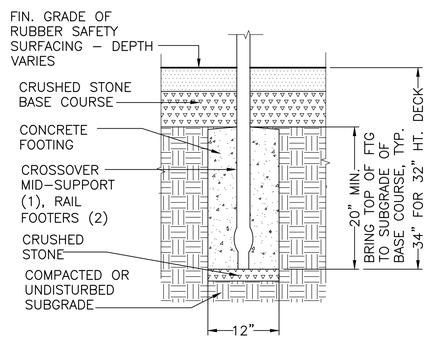

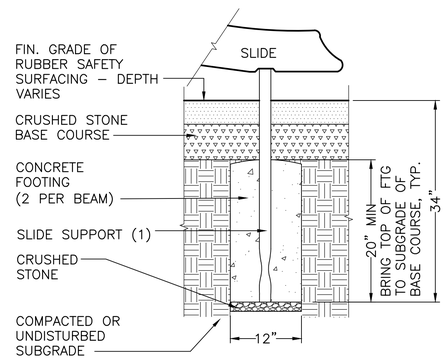

5 COZY COASTER SLIDE
SCALE: 1" = 1'-0"

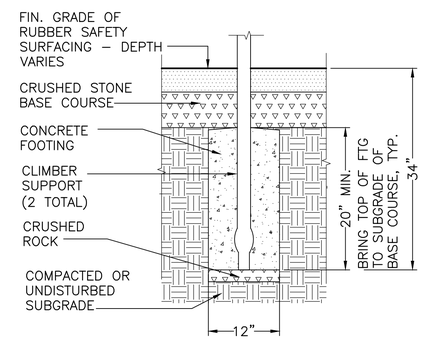

6 CRITTER CANYON FOOTINGS
SCALE: 1" = 1'-0"

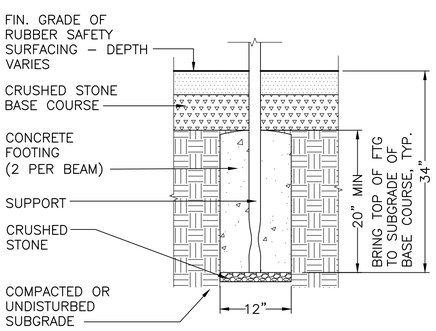

7 CURVED BALANCE BEAM
SCALE: 1" = 1'-0"

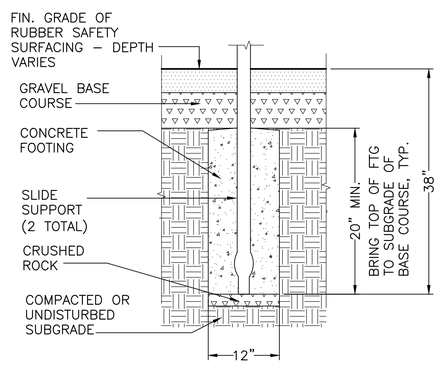

8 CURVED SLIDE FOOTINGS
SCALE: 1" = 1'-0"

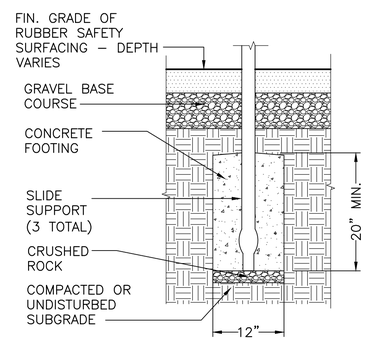

9 DOUBLE SWIRL POLYSLIDE FOOTINGS
SCALE: 1" = 1'-0"

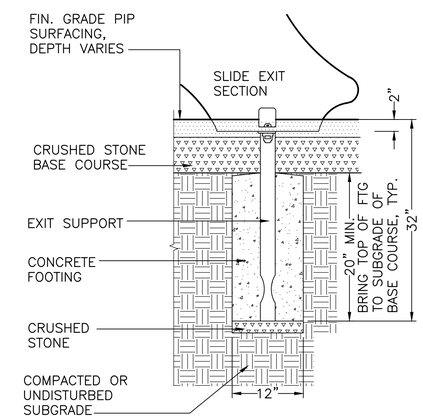

10 EL. TUNNEL SLIDE FOOTING
SCALE: 1" = 1'-0"

Carolyn Cooney & Associates
Landscape Architecture / Planning
13 Elm Street, Milford, MA 01757
Telephone 508 478 8426, Facsimile 508 478 8607

Site Engineering Consultants, Inc.
55 Grape Shot Road
Sharon, Massachusetts 02067
TEL: (781) 784-0326
FAX: (781) 784-0492
CONSULTING CIVIL ENGINEERS

No.	Description	Date

REVISIONS

Project:

CITY OF WALTHAM
GRAVERSON PLAYGROUND
16 PINE VALE ROAD
WALTHAM, MA 02451

Prepared For:

CITY OF WALTHAM
DEPARTMENT OF RECREATION
510 MOODY STREET
WALTHAM, MA 02453

TITLE:

PLAY EQUIPMENT FOOTING DETAILS 1

Scale AS NOTED Date OCT 31, 2017
Drawn By CCC
Checked By DRB
Approved By VH
Project No. 1710.00

DWG No. L.610

FOOTING DETAILS ARE SUPPLIED TO ASSIST IN BIDDING CONCRETE QUANTITIES, AND TO SHOW GENERAL RELATIONSHIPS. REFER TO MANUFACTURER'S SHOP DRAWINGS AND INSTRUCTIONS TO CONFIRM DIMENSIONS PRIOR TO INSTALLATION. MANUFACTURER'S DIMENSIONS AND INSTRUCTIONS TAKE PRECENDENCE.

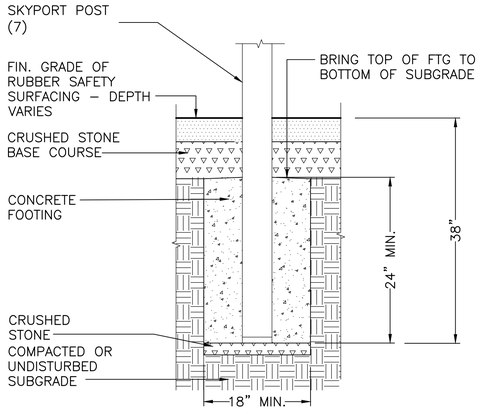

SECTION

1 NETPLEX 7 POST FOOTINGS
SCALE: 1" = 1'-0"

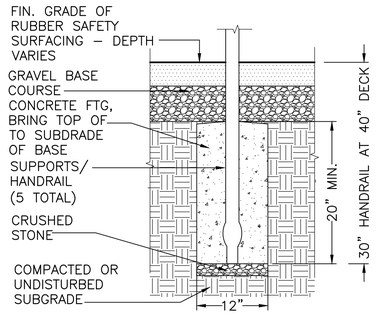

SECTION

2 POD CLIMBER WITH HANDRAIL
SCALE: 1" = 1'-0"

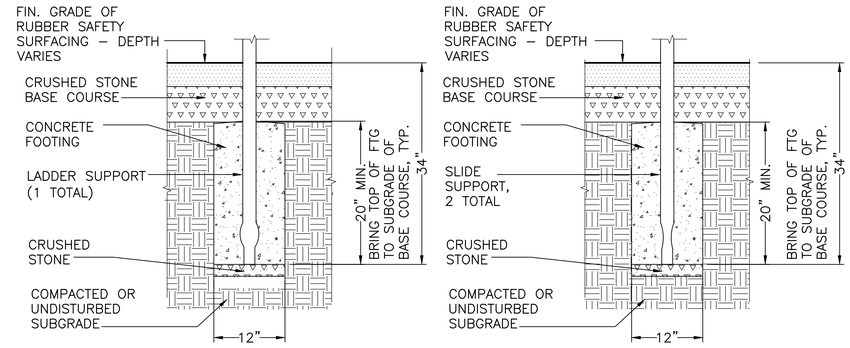

SECTION

3 RUSH SLIDE
SCALE: 1" = 1'-0"

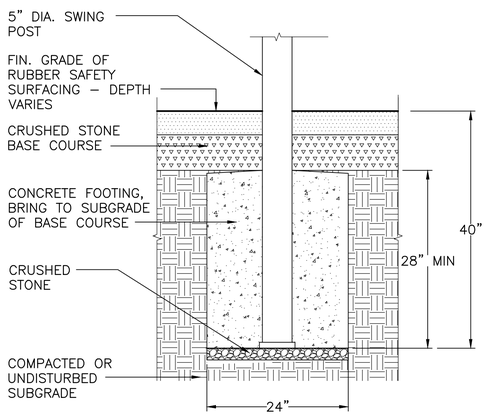

SECTION

4 SINGLE POST SWING FOOTINGS
SCALE: 1" = 1'-0"

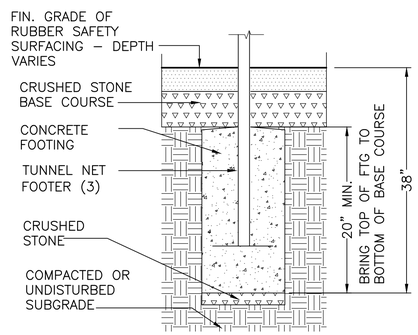

SECTION

5 SKYPORT TUNNEL NET CLIMBER FOOTERS
SCALE: 1" = 1'-0"

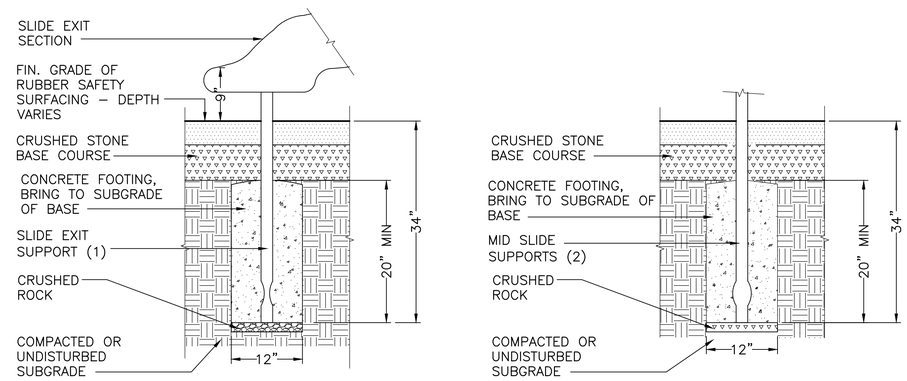

SECTION

6 SLIDEWINDER2 FOOTINGS
SCALE: 1" = 1'-0"

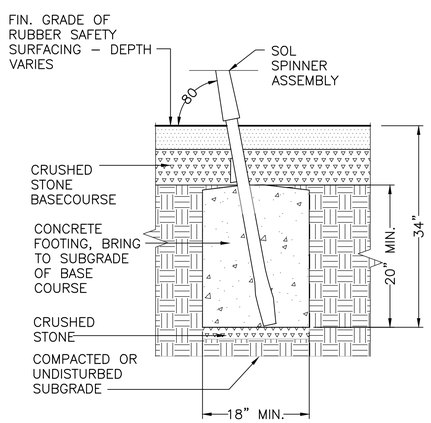

SECTION

7 SOL SPINNER FOOTING
SCALE: 1" = 1'-0"

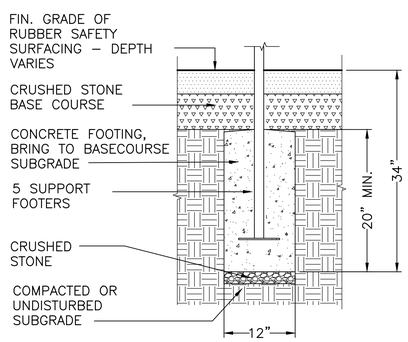

SECTION

8 SWIGGLY STIX BRIDGE
SCALE: 1" = 1'-0"

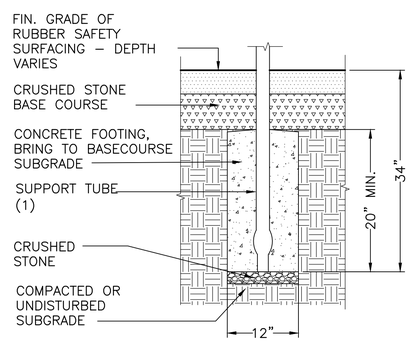

SECTION

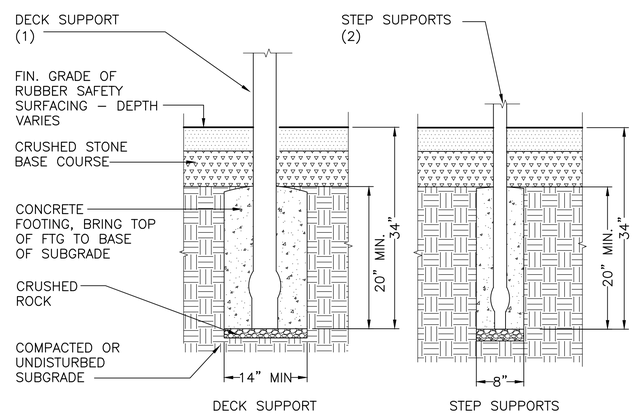

SECTION

9 TRANSFER MODULE FOOTINGS
SCALE: 1" = 1'-0"

Carolyn Cooney & Associates
Landscape Architecture / Planning
13 Elm Street, Milford, MA 01757
Telephone 508 478 8426, Facsimile 508 478 8607

Site Engineering Consultants, Inc.
55 Grape Shot Road
Sharon, Massachusetts 02067
TEL: (781) 784-0326
FAX: (781) 784-0492
CONSULTING CIVIL ENGINEERS

No.	Description	Date

REVISIONS

Project:

CITY OF WALTHAM
GRAVERSON PLAYGROUND
16 PINE VALE ROAD
WALTHAM, MA 02451

Prepared For:

CITY OF WALTHAM
DEPARTMENT OF RECREATION
510 MOODY STREET
WALTHAM, MA 02453

TITLE:

PLAY EQUIPMENT
FOOTING DETAILS 2

Scale AS NOTED Date OCT 31, 2017
Drawn By CCC
Checked By DRB
Approved By VH
Project No. 1710.00

DWG No. L.611

FOOTING DETAILS ARE SUPPLIED TO ASSIST IN BIDDING CONCRETE QUANTITIES, AND TO SHOW GENERAL RELATIONSHIPS. REFER TO MANUFACTURER'S SHOP DRAWINGS AND INSTRUCTIONS TO CONFIRM DIMENSIONS PRIOR TO INSTALLATION. MANUFACTURER'S DIMENSIONS AND INSTRUCTIONS TAKE PRECENDENCE.

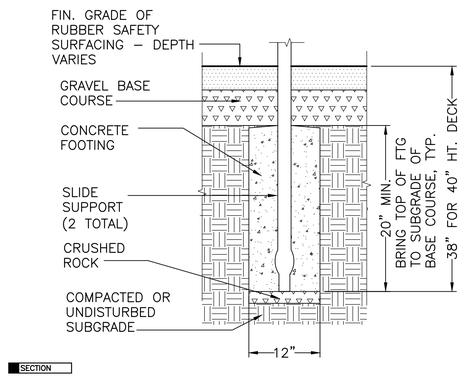

1 VERTICAL LADDER
SCALE: 1" = 1'-0"

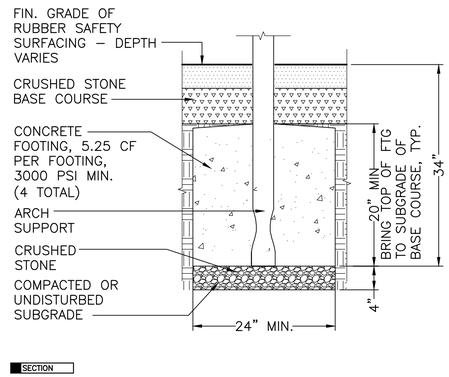

2 WEEVOS 3-1/2" ARCH FOOTING
SCALE: 1" = 1'-0"

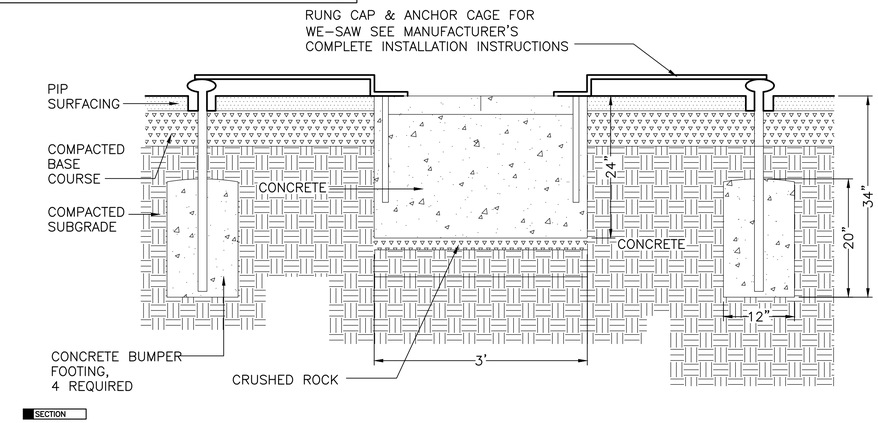

3 WE-SAW FOOTINGS
SCALE: 1" = 1'-0"

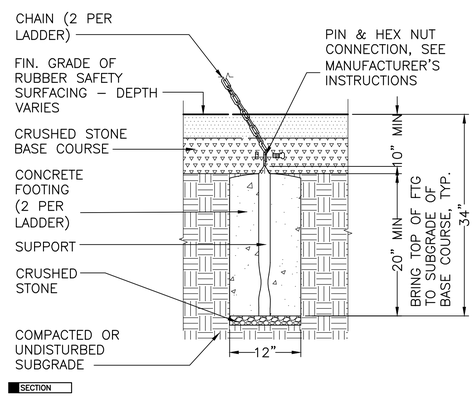

4 WIGGLE LADDER
1" = 1'-0"

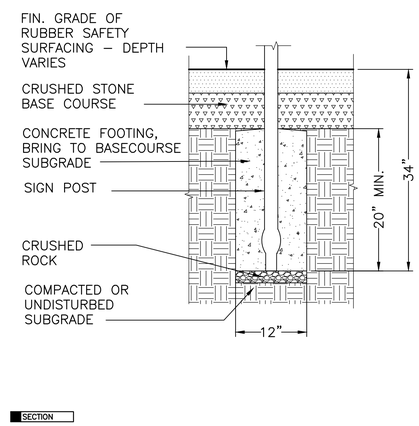

5 PLAYGROUND SIGN POST FOOTNG (2 REQUIRED)
1" = 1'-0"

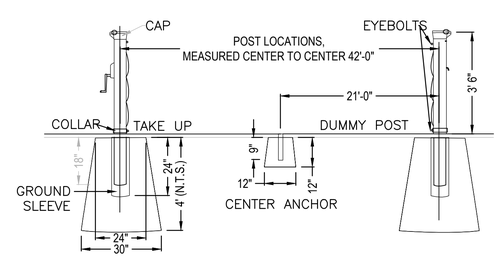

POST AND ANCHOR INSTALLATION

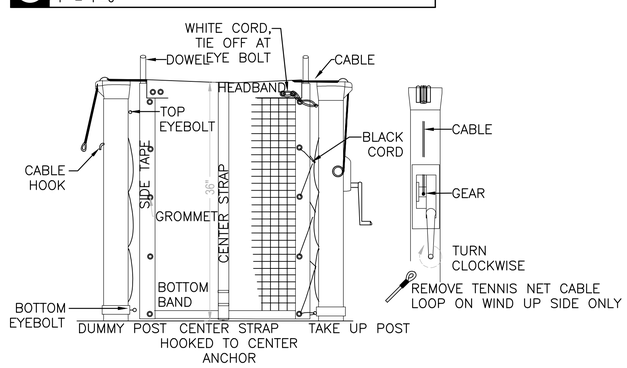

NET INSTALLATION

6 TENNIS NET & NET SUPPORT INSTALLATION DETAIL
N.T.S.

Carolyn Cooney & Associates
Landscape Architecture / Planning
13 Elm Street, Milford, MA 01757
Telephone 508 478 8426, Facsimile 508 478 8607

Site Engineering Consultants, Inc.
55 Grape Shot Road
Sharon, Massachusetts 02067
TEL: (781) 784-0326
FAX: (781) 784-0492
CONSULTING CIVIL ENGINEERS

No.	Description	Date

REVISIONS

Project:

CITY OF WALTHAM
GRAVERSON PLAYGROUND
16 PINE VALE ROAD
WALTHAM, MA 02451

Prepared For:

CITY OF WALTHAM
DEPARTMENT OF RECREATION
510 MOODY STREET
WALTHAM, MA 02453

TITLE:

PLAY EQUIPMENT FTG & TENNIS NET DETAILS

Scale AS NOTED Date OCT 31, 2017
Drawn By CCC
Checked By DRB
Approved By VH
Project No. 1710.00

DWG No. L.612

ALL MEASUREMENTS ARE TO THE OUTSIDE OF LINES

CENTER COURTS WITHIN EXISTING FENCE LINES

REFER TO DETAIL 2 – L.613 FOR TENNIS BACKBOARD DETAIL

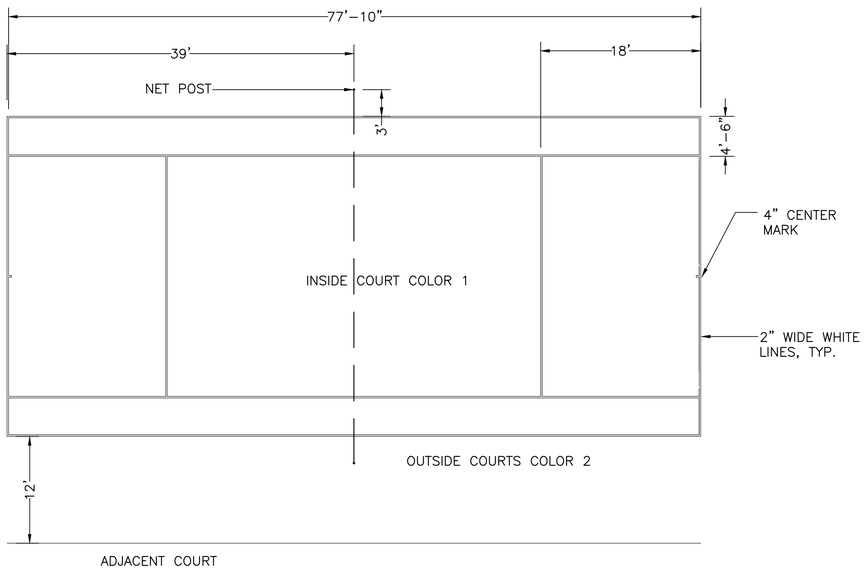

1 TENNIS COURT LAYOUT AND LINE STRIPING DETAIL
SCALE: 1/8"=1'–0"

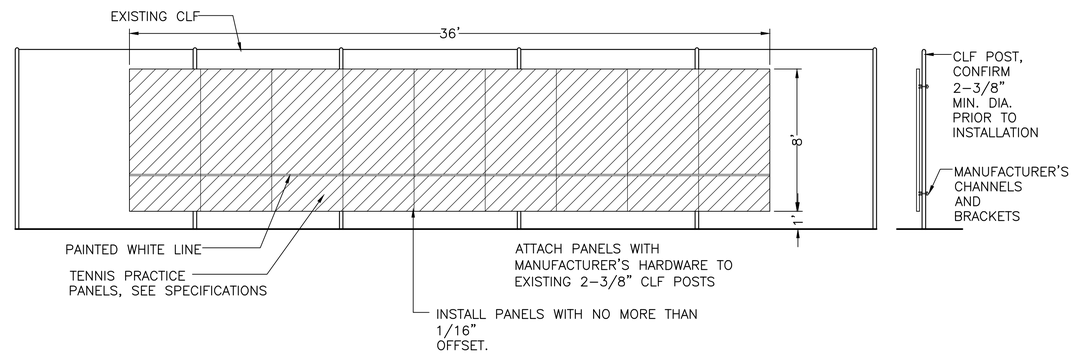

ELEVATION

2 TENNIS BACKBOARDS (2 SETS OF 8' X 36')
SCALE: 1/4" = 1'

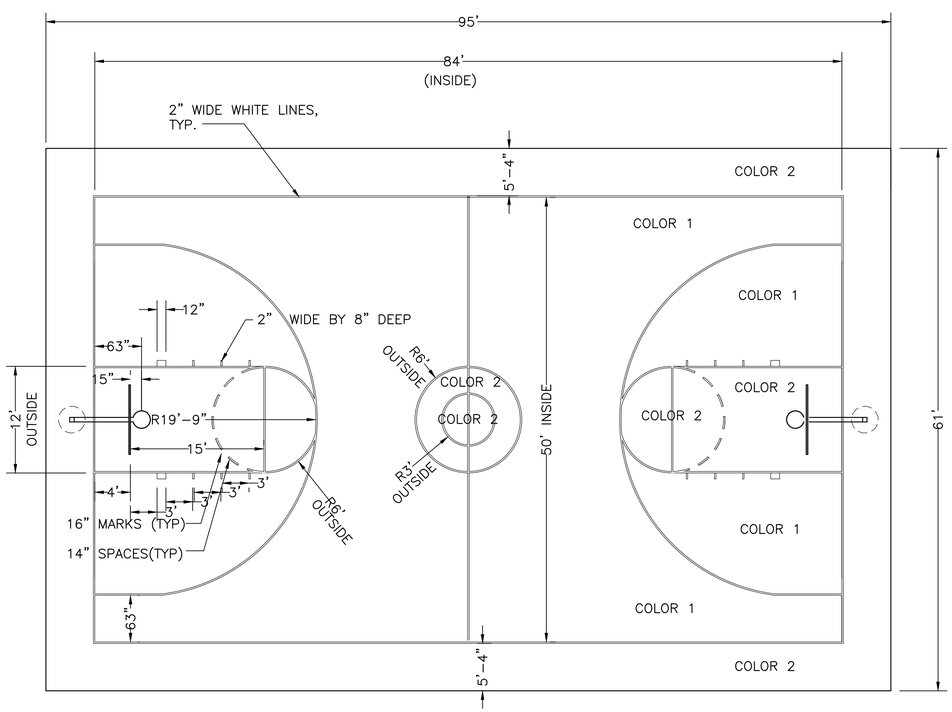

PLAN

3 BASKETBALL COURT LINE PAINTING LAYOUT
1/8" = 1'–0"

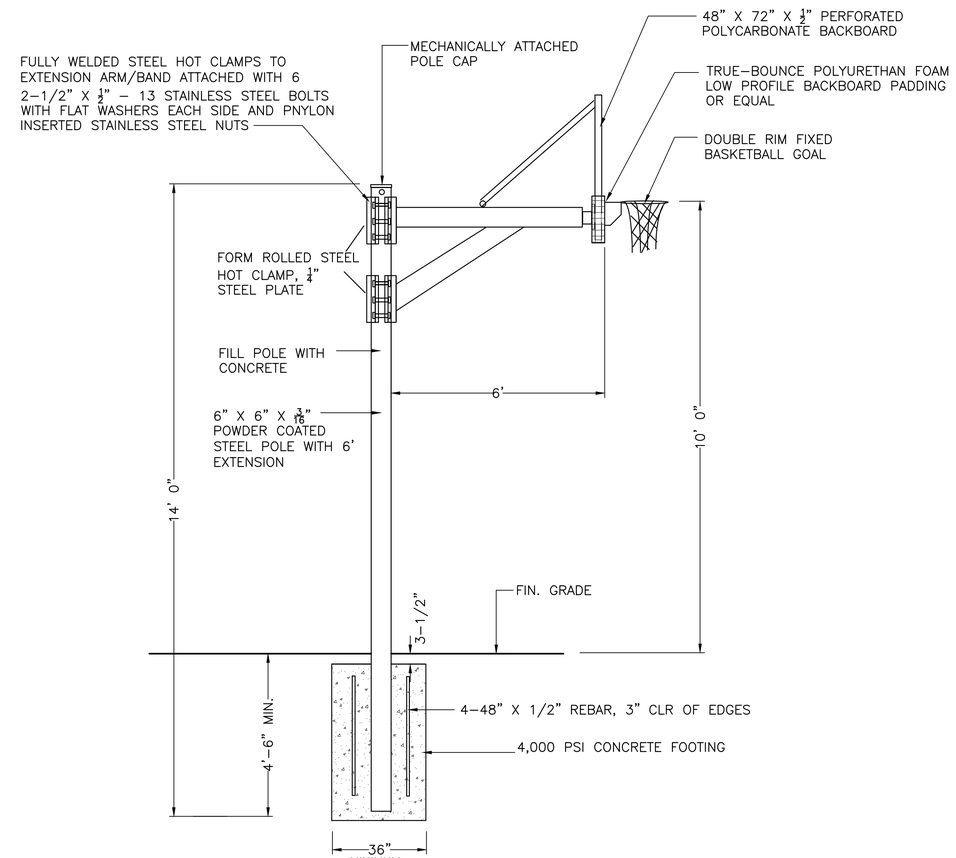

SECTIONAL ELEVATION

4 6' OFFSET BASKETBALL STANDARD – 2 REQUIRED
SCALE: 1/2" = 1'

Carolyn Cooney & Associates
Landscape Architecture / Planning
13 Elm Street, Milford, MA 01757
Telephone 508 478 8426, Facsimile 508 478 8607

Site Engineering Consultants, Inc.
55 Grape Shot Road
Sharon, Massachusetts 02067
TEL: (781) 784–0326
FAX: (781) 784–0492
CONSULTING CIVIL ENGINEERS

No.	Description	Date

REVISIONS

Project:

CITY OF WALTHAM
GRAVERSON PLAYGROUND
16 PINE VALE ROAD
WALTHAM, MA 02451

Prepared For:

CITY OF WALTHAM
DEPARTMENT OF RECREATION
510 MOODY STREET
WALTHAM, MA 02453

TITLE:

TENNIS/BBALL COURT DETAILS

Scale AS NOTED Date OCT 31, 2017
Drawn By CCC
Checked By DRB
Approved By VH
Project No. 1710.00

DWG No. L.613

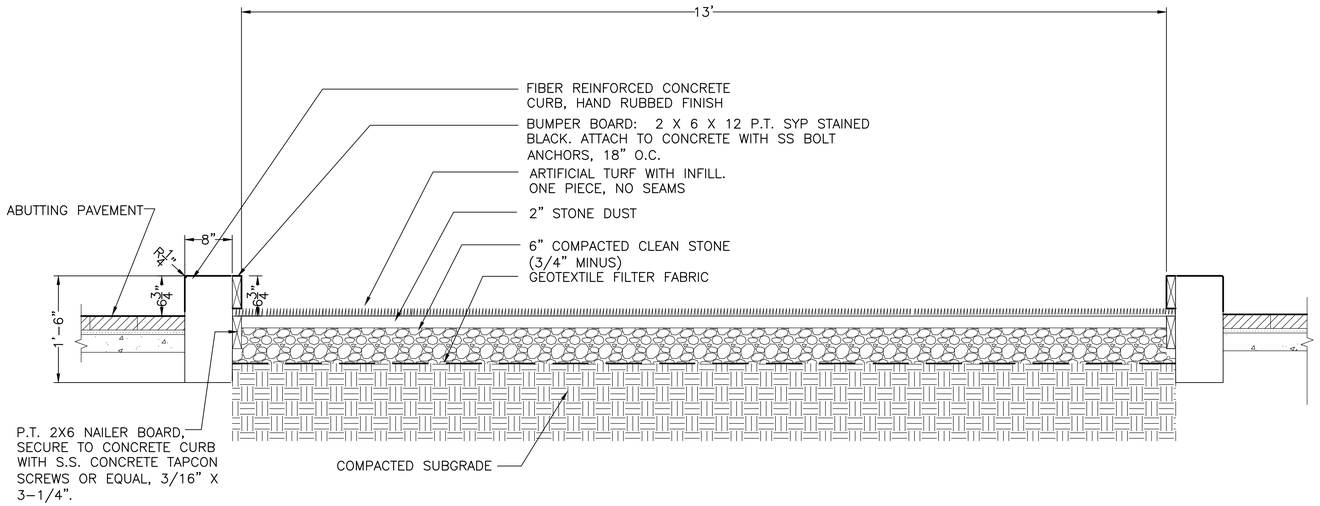

SECTION

1 BOCCE COURT
SCALE: 1" = 1'-0"

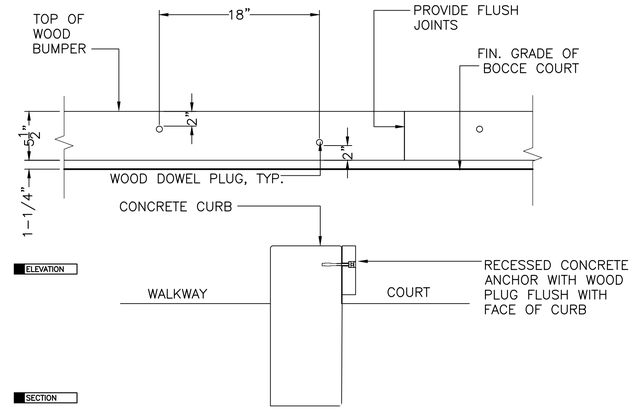

ELEVATION

SECTION

2 WOOD BUMPER ATTACHMENT DETAIL
SCALE: 1-1/2" = 1'-0"

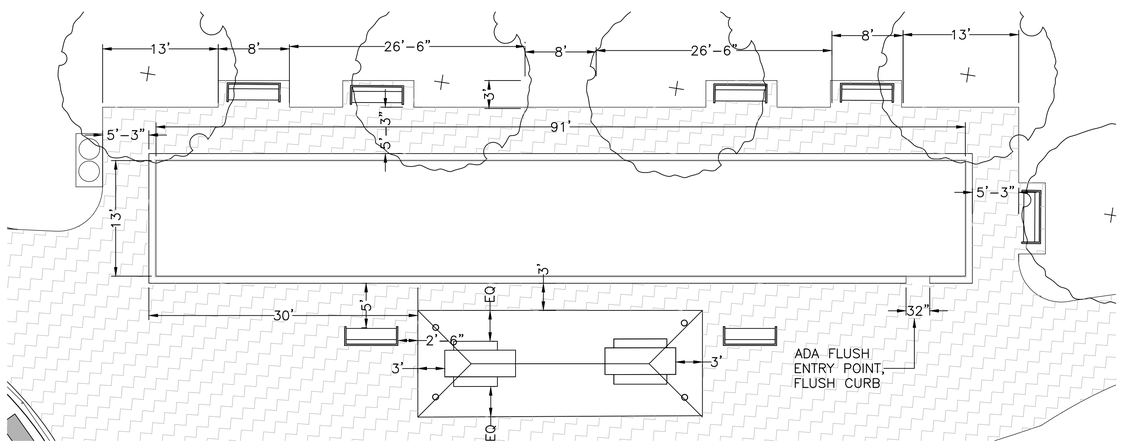

PLAN

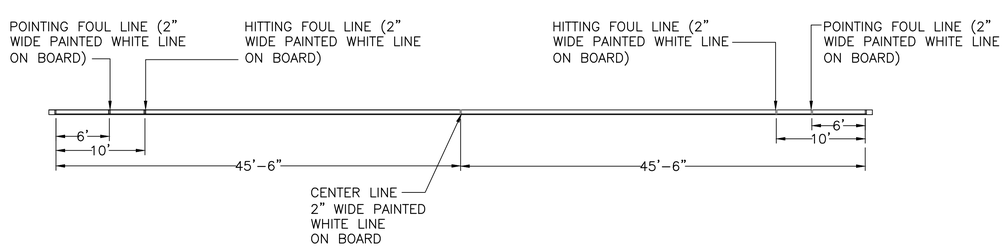

ELEVATION

3 BOCCE COURT ENLARGEMENT PLAN
SCALE: 1/8" = 1'-0"

Carolyn Cooney & Associates
Landscape Architecture / Planning
13 Elm Street, Milford, MA 01757
Telephone 508 478 8426, Facsimile 508 478 8607

Site Engineering Consultants, Inc.
55 Grape Shot Road
Sharon, Massachusetts 02067
TEL: (781) 784-0326
FAX: (781) 784-0492
CONSULTING CIVIL ENGINEERS

No.	Description	Date
1	FOOTING REVISIONS PER ADDENDUM #3	04/18/16

REVISIONS

Project:

CITY OF WALTHAM
GRAVERSON PLAYGROUND
16 PINE VALE ROAD
WALTHAM, MA 02451

Prepared For:

CITY OF WALTHAM
DEPARTMENT OF RECREATION
510 MOODY STREET
WALTHAM, MA 02453

TITLE:

BOCCE COURT DETAILS

Scale AS NOTED Date OCT 31, 2017
Drawn By CCC
Checked By DRB
Approved By VH
Project No. 1710.00

DWG No. L.614

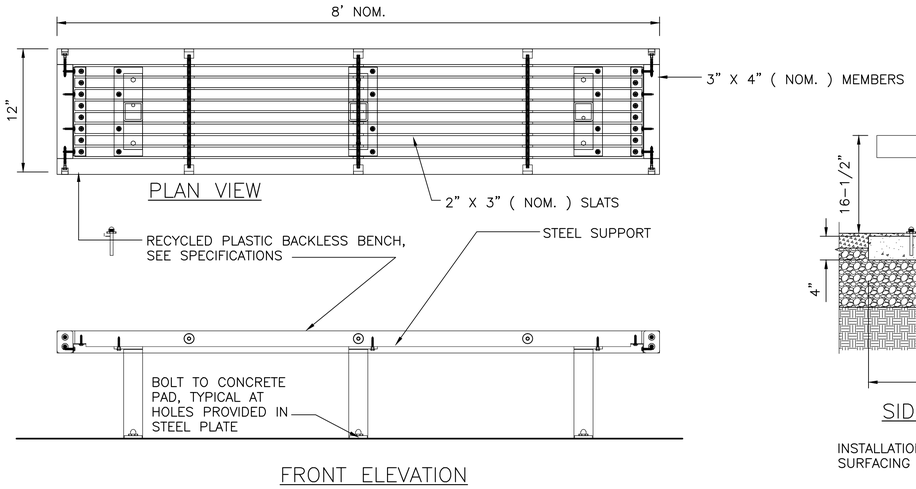

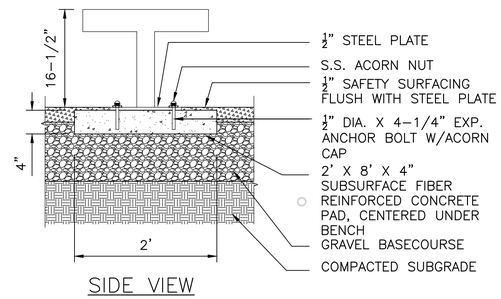

INSTALLATION ON RUBBER SURFACING

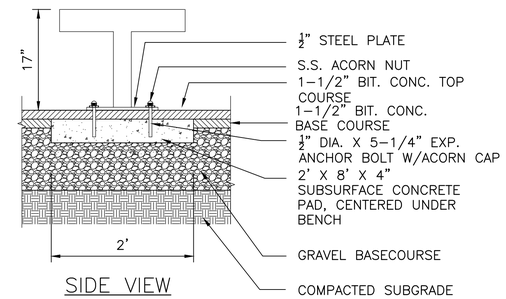

INSTALLATION ON BITUMINOUS CONCRETE PAVING

SECTIONAL ELEVATION

1 RECYCLED PLASTIC WOOD BACKLESS BENCH

N.T.S.

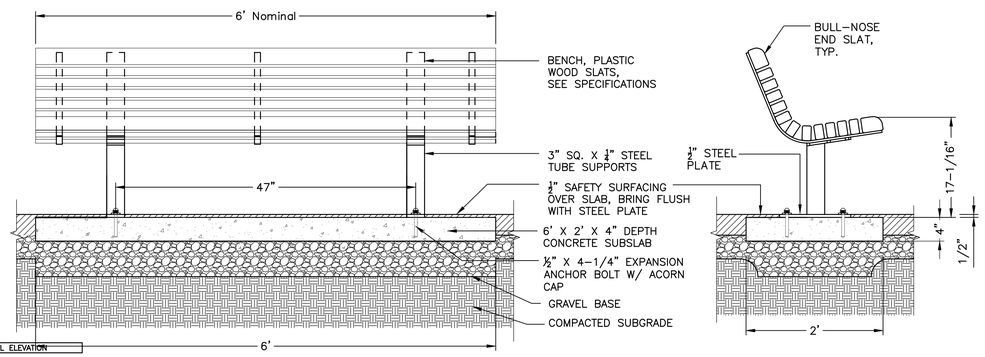

SECTIONAL ELEVATION

2 RECYCLED PLASTIC WOOD BENCH WITH BACK

N.T.S.

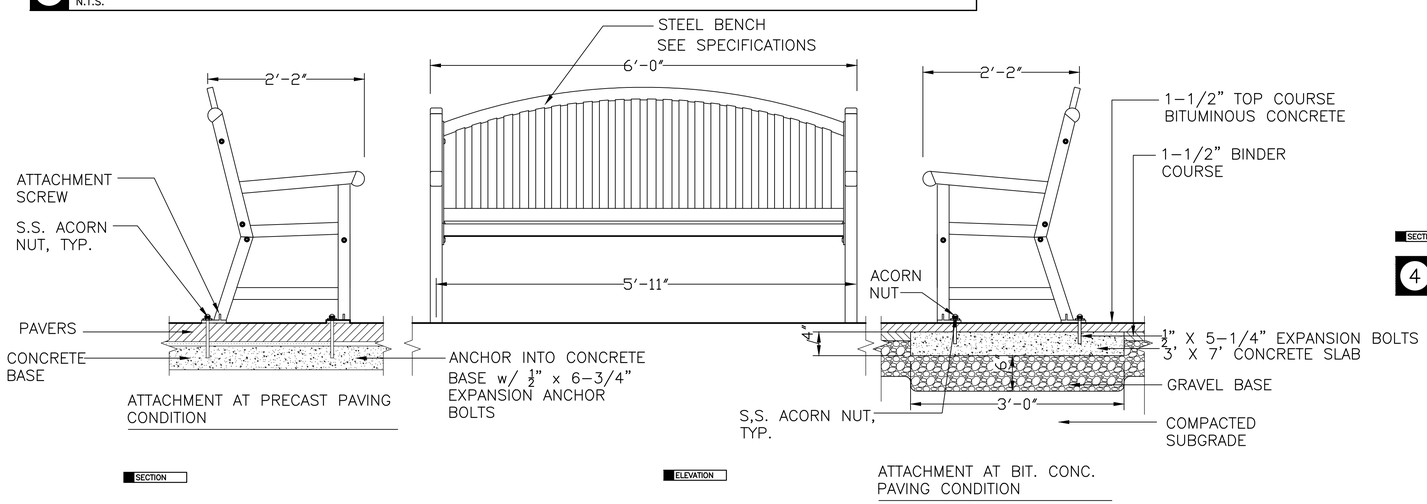

SECTIONAL ELEVATION

3 BENCH WITH BACK INSTALLATION DETAIL

N.T.S.

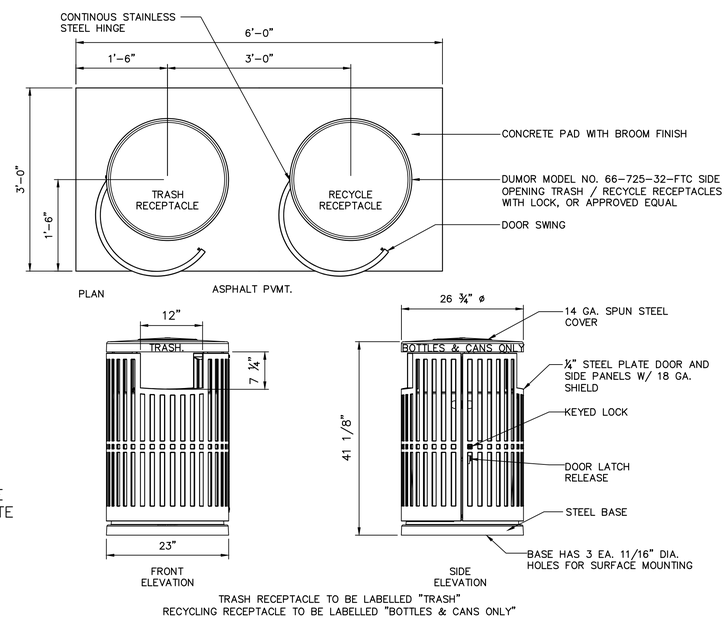

4 TRASH RECEPTACLES

SCALE: NTS

Carolyn Cooney & Associates
Landscape Architecture / Planning
13 Elm Street, Milford, MA 01757
Telephone 508 478 8426, Facsimile 508 478 8607

Site Engineering Consultants, Inc.
55 Grape Shot Road
Sharon, Massachusetts 02067
TEL: (781) 784-0326
FAX: (781) 784-0492
CONSULTING CIVIL ENGINEERS

No.	Description	Date
1	FOOTING/LAYOUT REVISION PER ADDENDUM #3	04/18/16

REVISIONS

Project:

CITY OF WALTHAM
GRAVERSON PLAYGROUND
16 PINE VALE ROAD
WALTHAM, MA 02451

Prepared For:

CITY OF WALTHAM
DEPARTMENT OF RECREATION
510 MOODY STREET
WALTHAM, MA 02453

TITLE:

SITE FURNITURE DETAILS 1

Scale AS NOTED Date OCT 31, 2017
Drawn By CCC
Checked By DRB
Approved By VH
Project No. 1710.00

DWG No. L.615

670

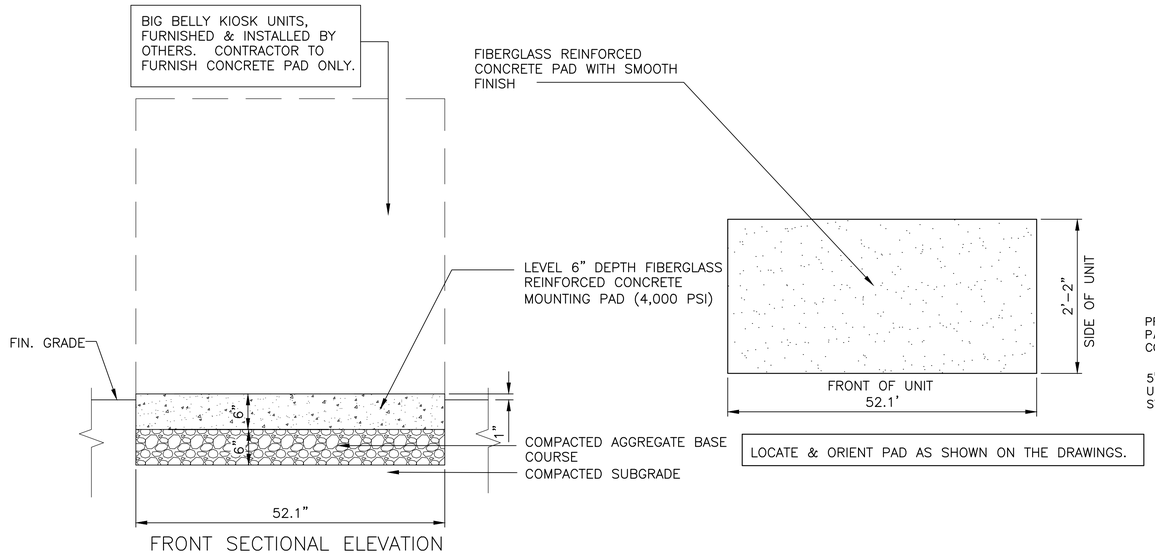

1 BIG BELLY KIOSK – CONCRETE PAD
SCALE: 1" = 1'-0"

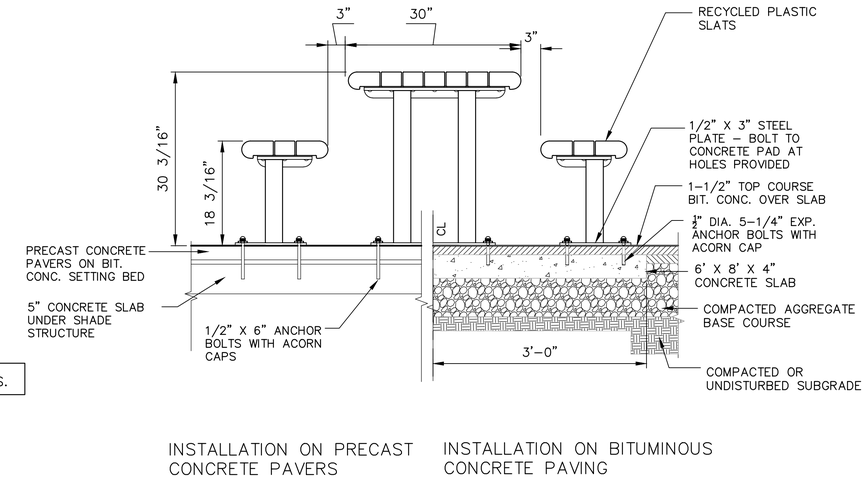

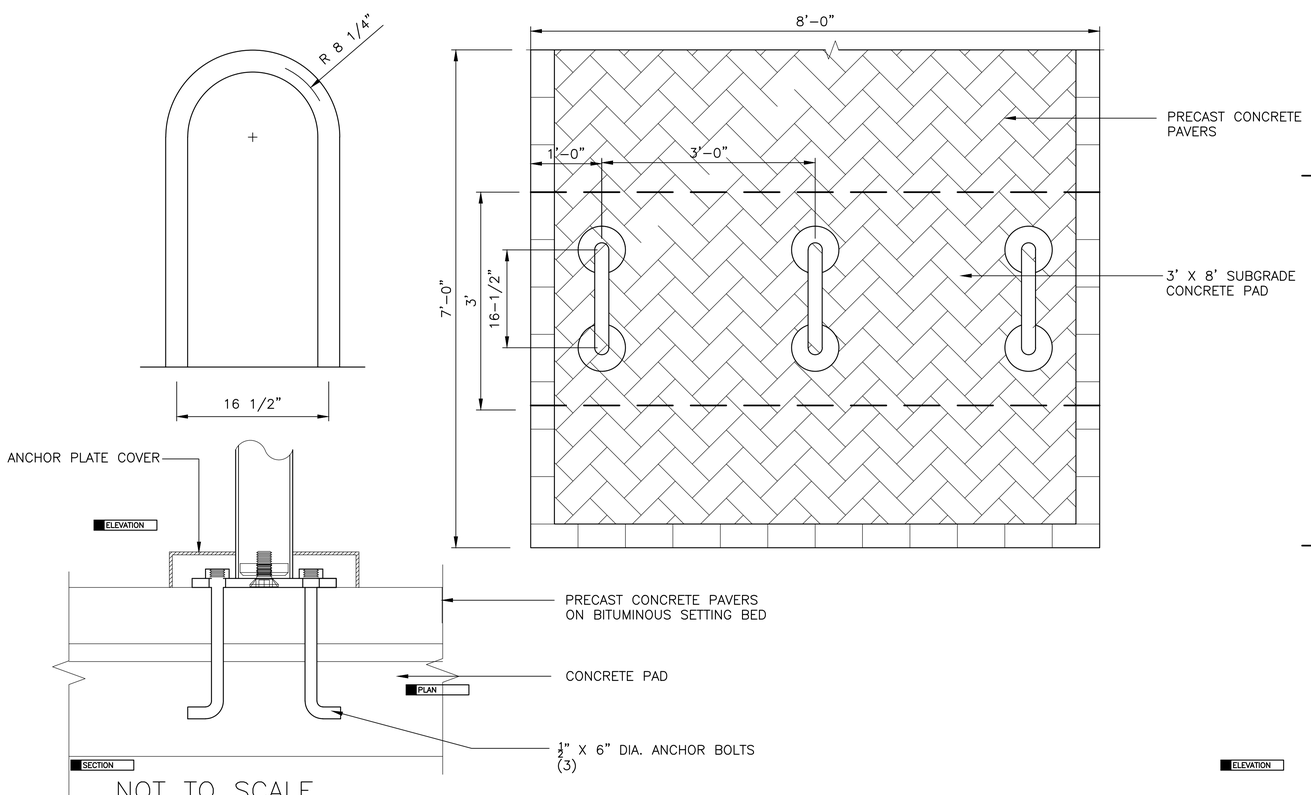

2 BIKE LOOPS
SCALE: 1" = 1'-0"

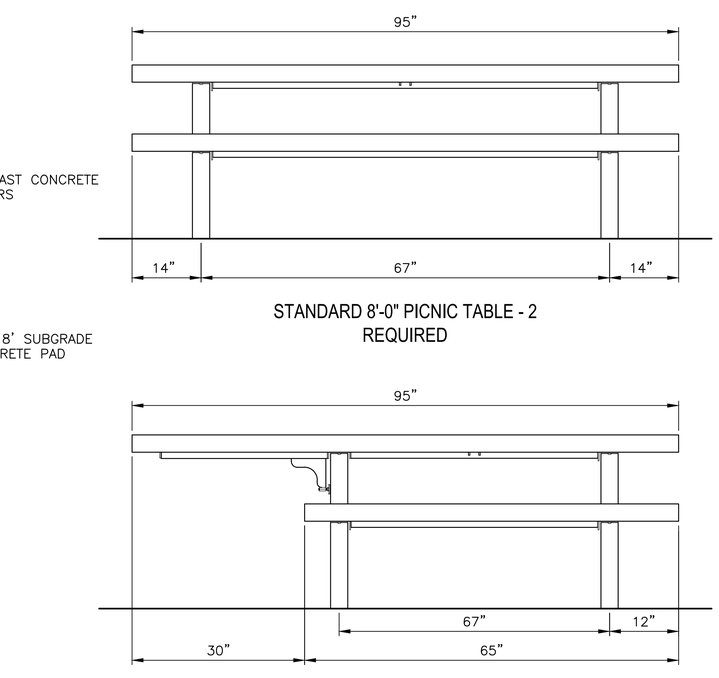

3 PICNIC TABLES
SCALE: 1" = 1'-0"

Carolyn Cooney & Associates
Landscape Architecture / Planning
13 Elm Street, Milford, MA 01757
Telephone 508 478 8426, Facsimile 508 478 8607

Site Engineering Consultants, Inc.
55 Grape Shot Road
Sharon, Massachusetts 02067
TEL: (781) 784-0326
FAX: (781) 784-0492
CONSULTING CIVIL ENGINEERS

No.	Description	Date

REVISIONS

Project:

CITY OF WALTHAM
GRAVERSON PLAYGROUND
16 PINE VALE ROAD
WALTHAM, MA 02451

Prepared For:

CITY OF WALTHAM
DEPARTMENT OF RECREATION
510 MOODY STREET
WALTHAM, MA 02453

TITLE:

SITE FURNITURE DETAILS 2

Scale AS NOTED Date OCT 31, 2017
Drawn By CCC
Checked By DRB
Approved By VH
Project No. 1710.00

DWG No. L.616

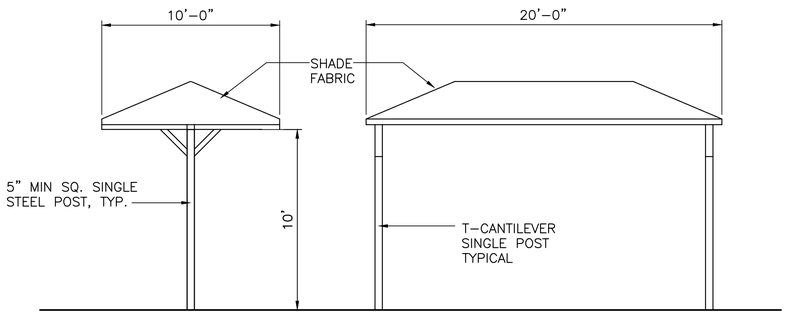

ELEVATION

1 FABRIC SHADE SHELTERS (2 TOTAL)
SCALE: 1/4"=1'–0"

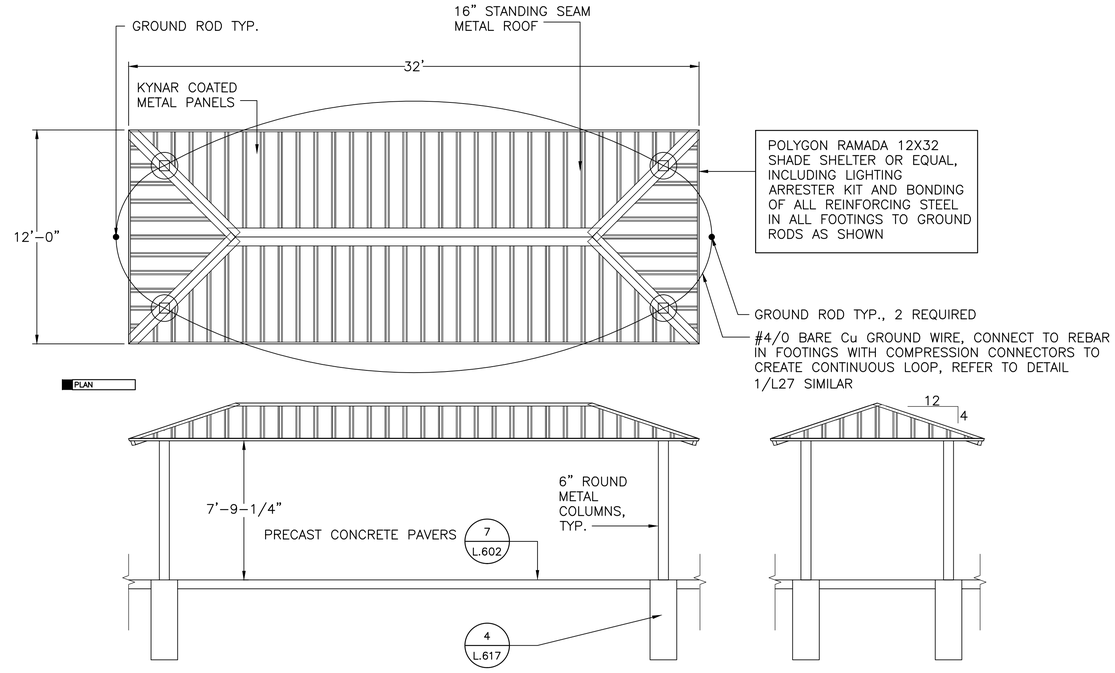

ELEVATION

2 METAL SHADE SHELTER AT BOCCE COURT
SCALE: 1/4" = 1'–0"

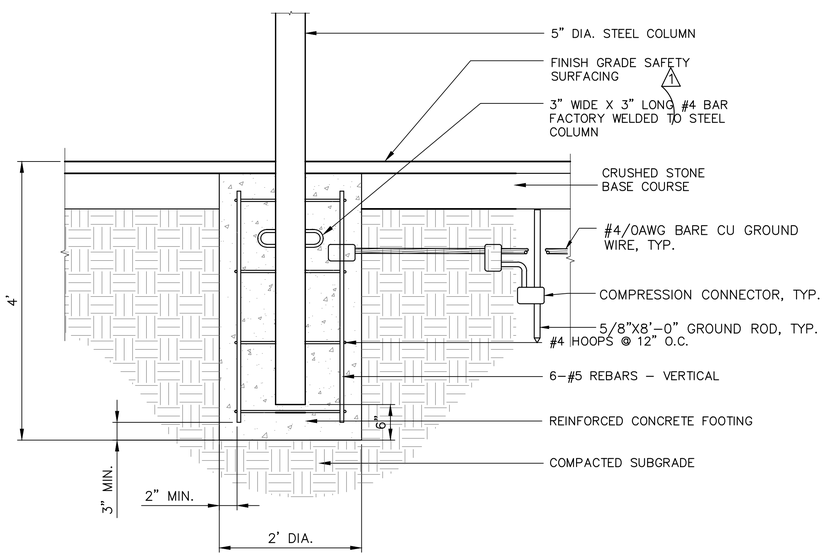

SECTION

3 FABRIC SHADE SHELTER – FOOTING DETAIL
SCALE: 1/2"=1'–0"

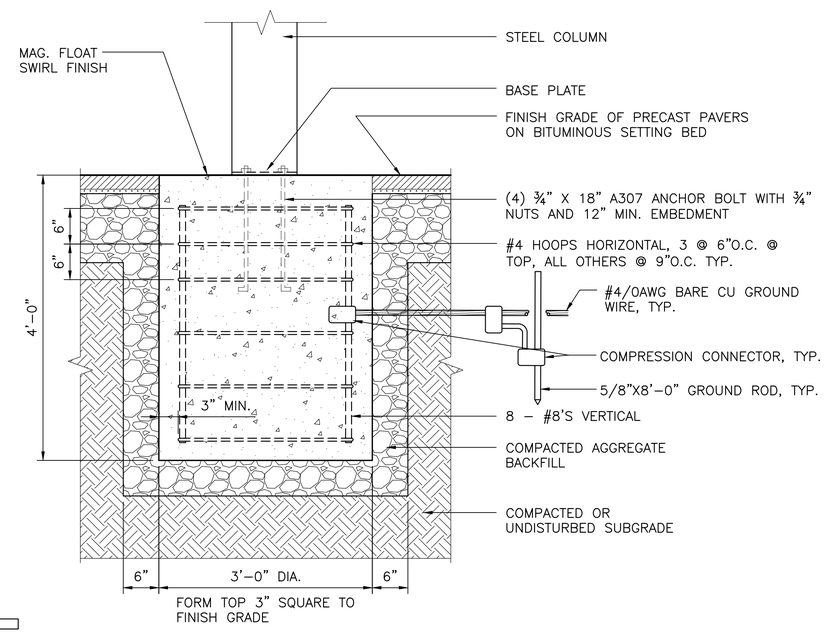

SECTION

4 METAL SHADE SHELTER FOOTING
SCALE: 1" = 1'–0"

Carolyn Cooney & Associates
Landscape Architecture / Planning
13 Elm Street, Milford, MA 01757
Telephone 508 478 8426, Facsimile 508 478 8607

Site Engineering Consultants, Inc.
55 Grape Shot Road
Sharon, Massachusetts 02067
TEL: (781) 784-0326
FAX: (781) 784-0492
CONSULTING CIVIL ENGINEERS

No.	Description	Date

REVISIONS

Project:

CITY OF WALTHAM
GRAVERSON PLAYGROUND
16 PINE VALE ROAD
WALTHAM, MA 02451

Prepared For:

CITY OF WALTHAM
DEPARTMENT OF RECREATION
510 MOODY STREET
WALTHAM, MA 02453

TITLE:

SHADE STRUCTURE DETAILS

Scale AS NOTED Date OCT 31, 2017
Drawn By CCC
Checked By DRB
Approved By VH
Project No. 1710.00

DWG No. L.617

672

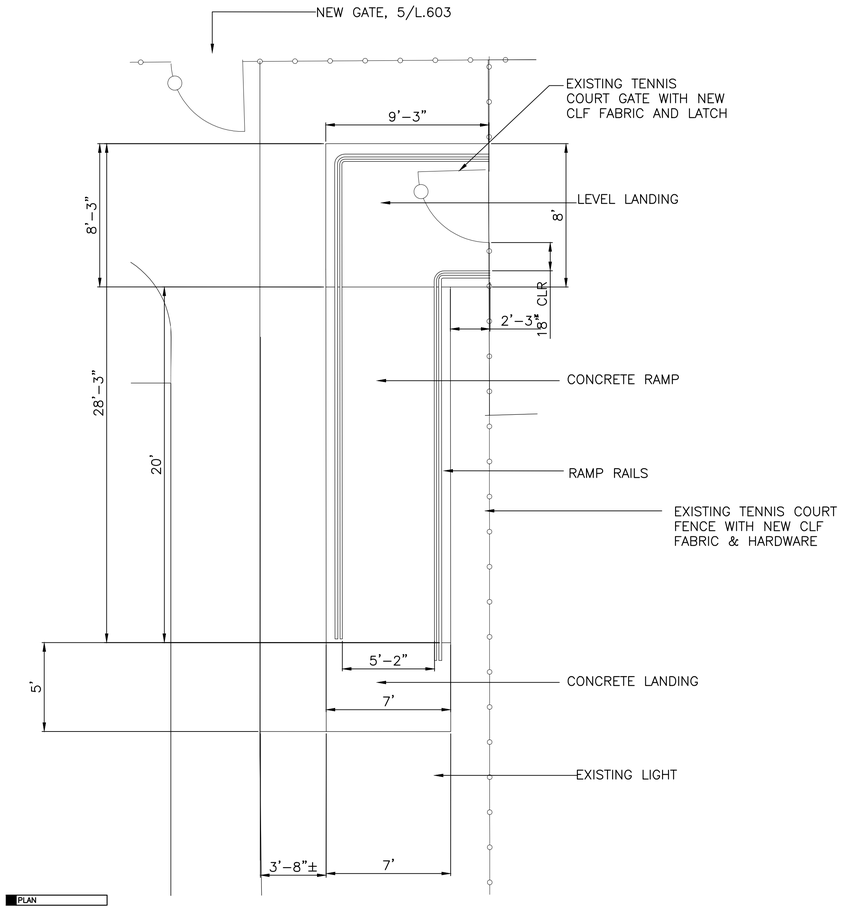

1 RAMP AT TENNIS COURTS
SCALE 1/4" = 1'-0"

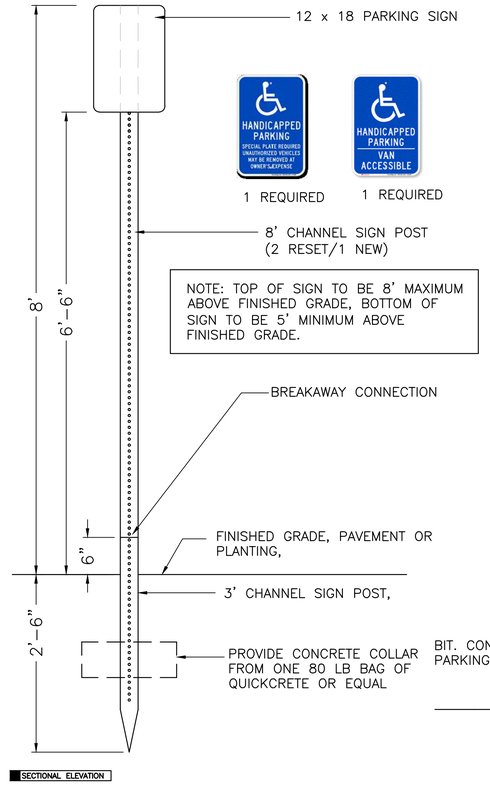

2 HC PARKING SIGNS
SCALE 1" = 1'-0"

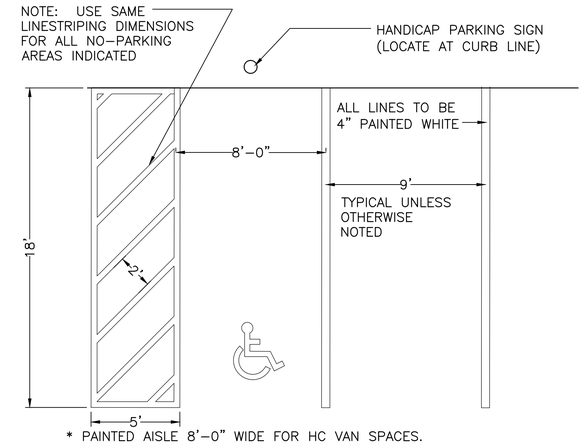

3 PARKING LOT STRIPING DETAIL
SCALE: 1/4" = 1'-0"

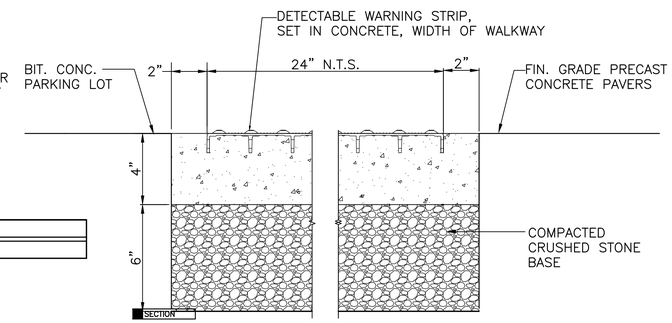

4 DETECTABLE WARNING STRIP DETAIL
SCALE: ONE QUARTER SIZE

SEE SPECIFICATION SECTION 05520 METAL RAILINGS FOR FINISHES.

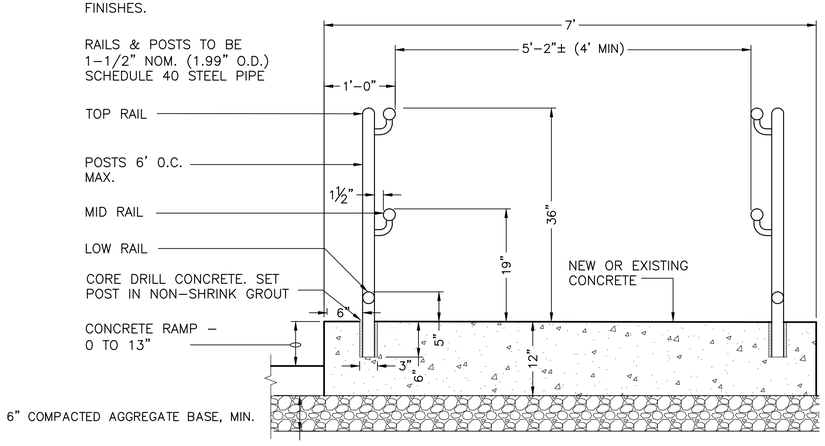

2 RAMP SECTION
SCALE 1" = 1'-0"

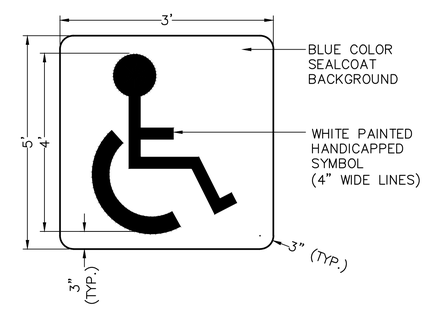

5 HC SYMBOL DETAIL
SCALE: 1" = 1'-0"

Carolyn Cooney & Associates
Landscape Architecture / Planning
13 Elm Street, Milford, MA 01757
Telephone 508 478 8426, Facsimile 508 478 8607

Site Engineering Consultants, Inc.
55 Grape Shot Road
Sharon, Massachusetts 02067
TEL: (781) 784-0326
FAX: (781) 784-0492
CONSULTING CIVIL ENGINEERS

No.	Description	Date
	REVISIONS	

Project:

CITY OF WALTHAM
GRAVERSON PLAYGROUND
16 PINE VALE ROAD
WALTHAM, MA 02451

Prepared For:

CITY OF WALTHAM
DEPARTMENT OF RECREATION
510 MOODY STREET
WALTHAM, MA 02453

TITLE:

SIGNAGE, STRIPING & ADA DETAILS

Scale AS NOTED Date OCT 31, 2017
Drawn By CCC
Checked By DRB
Approved By VH
Project No. 1710.00

DWG No. L.618

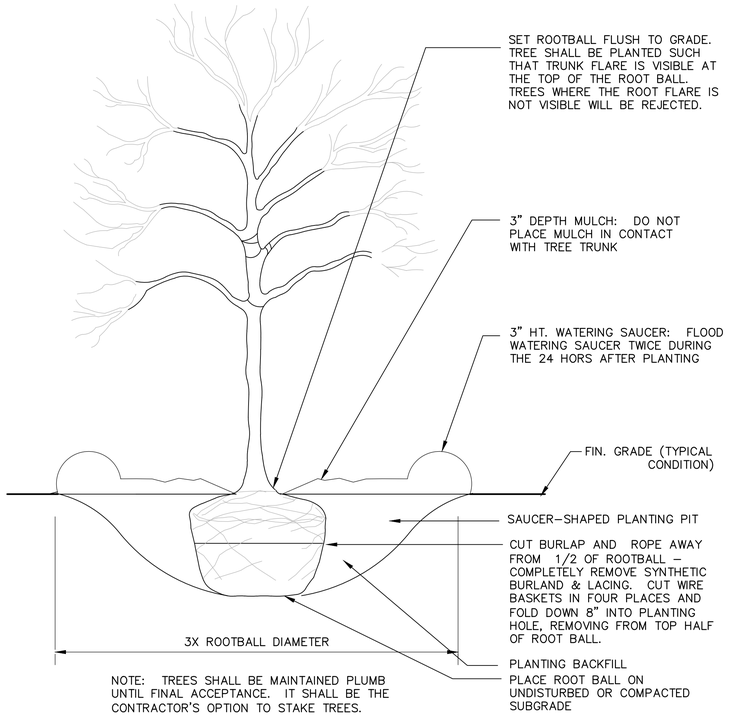

SECTION

1 DECIDUOUS TREE PLANTING DETAIL
N.T.S.

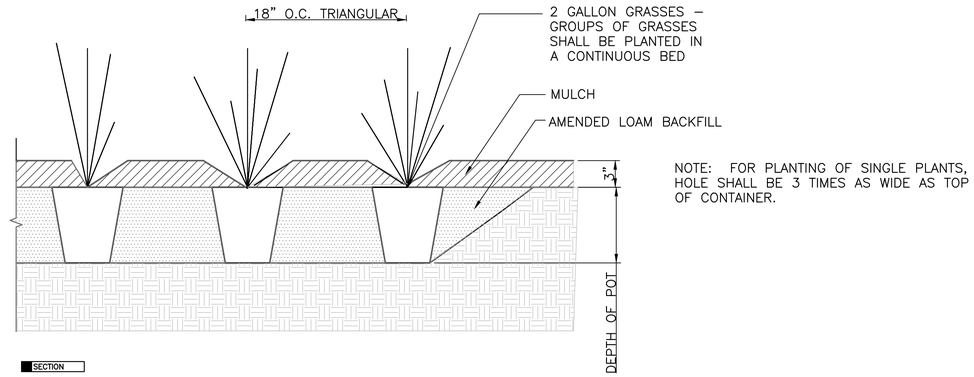

NOTE: FOR PLANTING OF SINGLE PLANTS, HOLE SHALL BE 3 TIMES AS WIDE AS TOP OF CONTAINER.

SECTION

2 CONTAINER PLANTING
N.T.S.

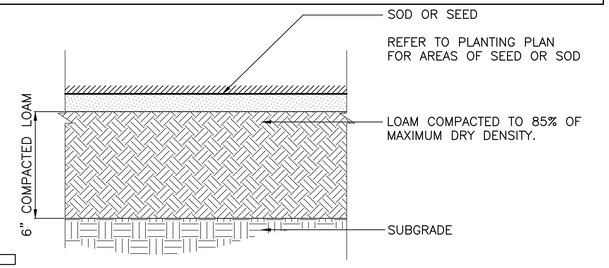

SECTION

3 SEEDING DETAIL
N.T.S.

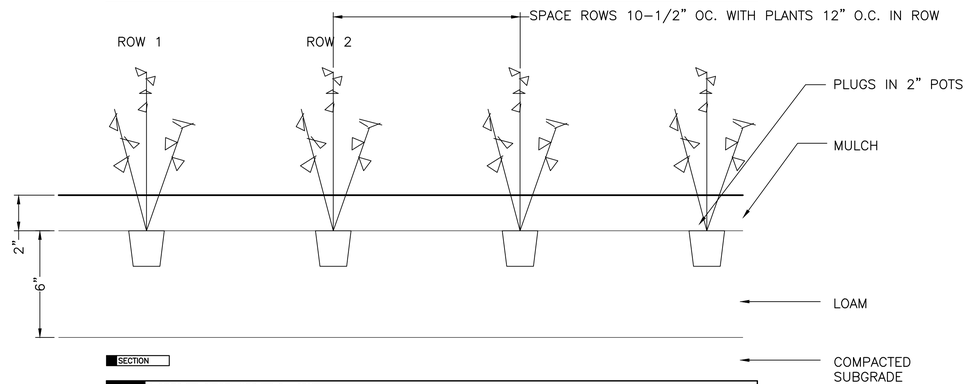

SECTION

5 PLUG PLANTING DETAIL
SCALE: 3" = 1'-0"

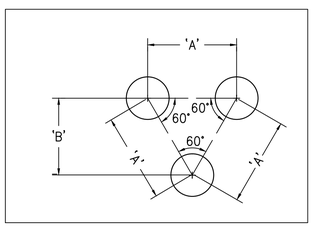

PLANT SPACING ('A')	ROW SPACING ('B')
6 IN. O.C.	5 IN. O.C.
8 IN. O.C.	7 IN. O.C.
10 IN. O.C.	8-1/2 IN. O.C.
12 IN. O.C.	10-1/2 IN. O.C.
15 IN. O.C.	13 IN. O.C.
18 IN. O.C.	16 IN. O.C.
24 IN. O.C.	21 IN. O.C.
30 IN. O.C.	26 IN. O.C.
36 IN. O.C.	30 IN. O.C.
48 IN. O.C.	42 IN. O.C.
54 IN. O.C.	48 IN. O.C.
60 IN. O.C.	54 IN. O.C.

4 SPACING CHART
N.T.S.

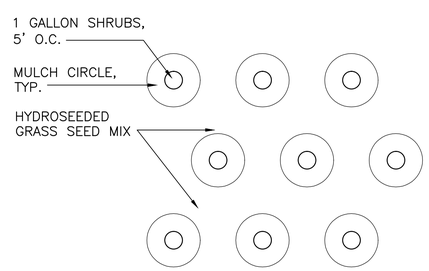

PLAN

6 SHRUB PLANTING ON BIORETENTION AREA SIDE SLOPES
N.T.S.

Carolyn Cooney & Associates
Landscape Architecture / Planning
13 Elm Street, Milford, MA 01757
Telephone 508 478 8426, Facsimile 508 478 8607

Site Engineering Consultants, Inc.
55 Grape Shot Road
Sharon, Massachusetts 02067
TEL: (781) 784-0326
FAX: (781) 784-0492
CONSULTING CIVIL ENGINEERS

No.	Description	Date

REVISIONS

Project:

CITY OF WALTHAM
GRAVERSON PLAYGROUND
16 PINE VALE ROAD
WALTHAM, MA 02451

Prepared For:

CITY OF WALTHAM
DEPARTMENT OF RECREATION
510 MOODY STREET
WALTHAM, MA 02453

TITLE:

PLANTING DETAILS

Scale AS NOTED Date OCT 31, 2017
Drawn By CCC
Checked By DRB
Approved By VH
Project No. 1710.00

DWG No. L.619

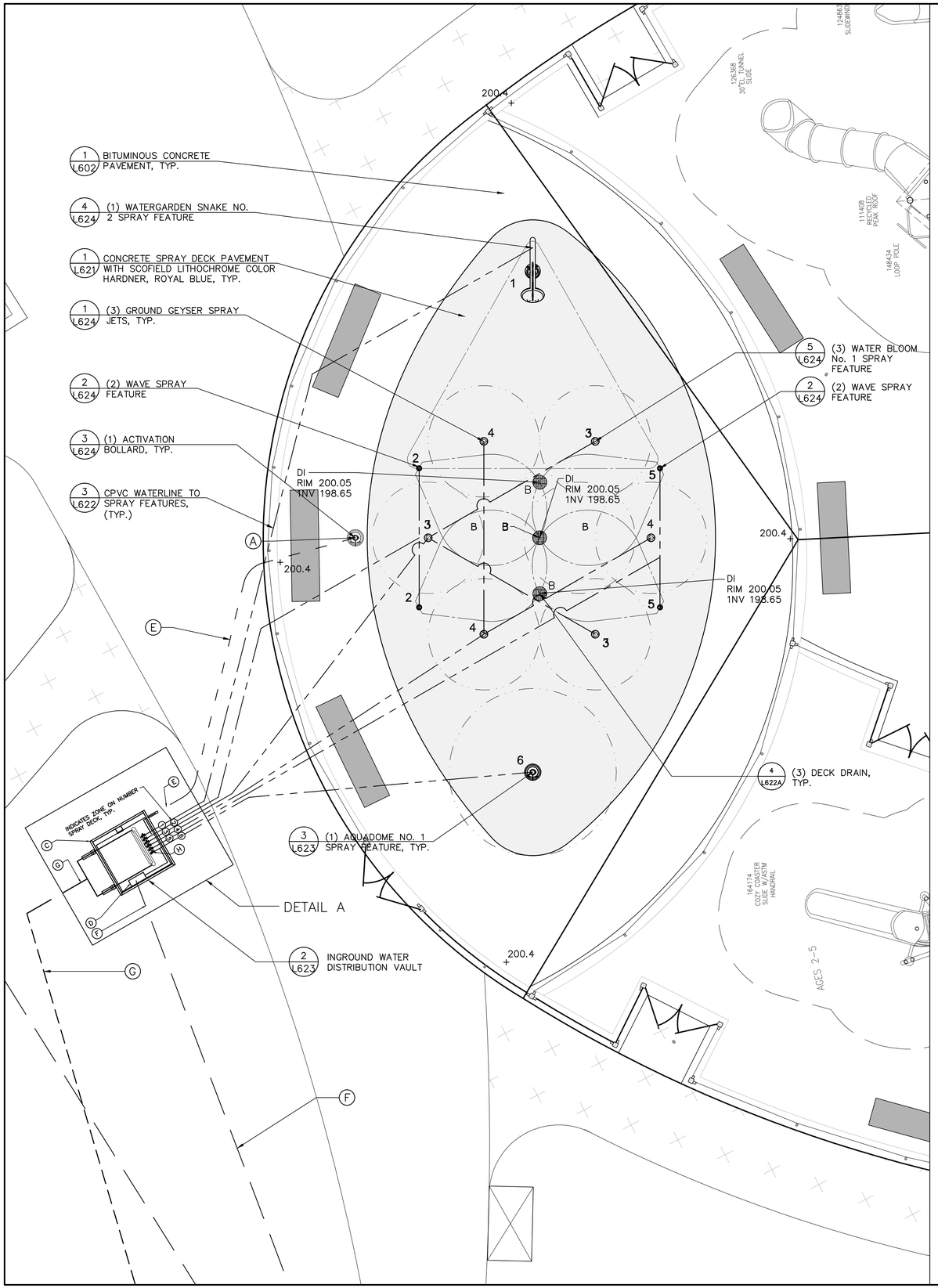

NOTE:

1. REFER TO THE INSTALLATION DETAILS OF EACH PLAY PRODUCT & EQUIPMENT VAULT FOR SPECIFIC INSTALLATION DETAILS.

2. WATER DISTRIBUTION SYSTEM CONFIGURATION IS CONCEPTUAL AND REQUIRES FIELD LAYOUT AND APPROVAL PRIOR TO INSTALLATION.

3. SPLASHPAD ACTIVITY DECK & DRAIN LINES SHALL HAVE A 1–2% SLOPE TO OPTIMIZE DRAINAGE.

4. ALL PIPING TO FEATURES ARE RECOMMENDED TO HAVE A 1–2% SLOPE FOR WINTERIZATION.

5. ALL LINE SIZING FROM LEGEND 1 ASSUMES A MAXIMUM DISTANCE OF 100 FEET BETWEEN THE WATER DISTRIBUTION MANIFOLD AND THE FURTHEST PLAY PRODUCT. DISTANCES ABOVE 100 FEET MAY REQUIRE AN INCREASE IN LINE SIZING.

6. ALL PIPING BETWEEN THE PLAY PRODUCTS & WATER DISTRIBUTION SYSTEM SHALL BE SCHEDULE 80 CPVC.

7. REFER TO DRAWING C.XX, SPRAY DECK DRAIN MODIFICATION PLAN, FOR PIPING TO SEWER AND STORM DRAIN.

8. WHEN CONNECTING MULTIPLE PLAY PRODUCTS TO ONE FEEDER LINE, THE JUNCTION POINT (SPLIT OR T) SHALL BE PLACED IN THE MID POINT BETWEEN EACH PLAY PRODUCT. FAILURE TO DO SO MAY RESULT IN UNEQUAL SPRAY EFFECTS BETWEEN PLAY PRODUCTS.

9. WIRING FROM THE CONTROLLER TO ACTIVATION BOLLARD SHALL BE #14 AWG W/#8 GROUND.

10. ALL CONNECTIONS TO THE CONTROLLER SHALL BE PERFORMED USING AN APPROVED NEMA 4X CONNECTOR.

12. MINIMUM 50 PSI REQUIRED AT THE INLET OF THE BACKFLOW PREVENTER AND PRESSURE REGULATING DEVICE.

13. VALVE NUMBER 1 IS LOCATED ON THE TOP LEFT OF THE MANIFOLD WHEN FACING THE MANIFOLD FROM IN SIDE THE VAULT. TOTAL COMBINED FLOW OF PLAY PRODUCT IS 88 GPM.

PRESSURE TESTING PVC PIPE

THE TEST PRESSURE APPLIED SHOULD NOT EXCEED: (A) THE DESIGNED MAXIMUM OPERATING PRESSURE, (B) THE DESIGNED PRESSURE RATING OF THE PIPE, (C) THE DESIGNED PRESSURE RATING OF ANY SYSTEM COMPONENT, WHICHEVER IS LOWEST.

CONDUCT PRESSURE TESTING WITH WATER. DO NOT USE AIR OR OTHER GASES FOR PRESSURE TESTING.

THE PIPING SYSTEM SHOULD BE SLOWLY FILLED WITH WATER, TAKING CARE TO PREVENT SURGE AND AIR ENTRAPMENT FLOW VELOCITY SHOULD NOT EXCEED 1 FOOT PER SECOND. ALL TRAPPED AIR MUST BE RELEASED.

THE PIPING SYSTEM CAN BE PRESSURIZED TO 125% OF ITS DESIGNED WORKING PRESSURE. HOWEVER, CARE MUST BE TAKEN TO ENSURE THE PRESSURE DOES NOT EXCEED THE WORKING PRESSURE OF THE LOWEST RATED COMPONENT IN THE SYSTEM (VALVES, UNIONS, FLANGES, THREADED PARTS, ETC.).

THE PRESSURE TEST SHOULD NOT EXCEED ONE HOUR. ANY LEAKING JOINTS OR PIPE MUST BE CUT OUT AND REPLACED AND THE LINE RECHARGED AND RETESTED USING THE SAME PROCEDURE UNTIL NO LEAKS ARE FOUND.

LEGEND–1

LINE	PRODUCT	QTY	GPM	LINE SIZE
1	Watergarden Snake No. 2 VOR–7214	1	8	1–1/2"
2	Wave VOR–0327	2	8	1–1/2"
3	Water Bloom No. 1 VOR–0322	3	24	1–1/2"
4	Ground Geyser VOR–301	3	24	1–1/2"
5	Wave VOR–0327	2	8	1–1/2"
6	Aquadome No. 1 VOR–0555	1	16	1–1/2"

LEGEND–2

DETAIL NO.	CODE	PRODUCT	QTY	LINE SIZE
3/L624	A	Bollard Activator	1	
4/L622A	B	Deck Drain 9" dia. Zurn Model No. Z550	3	
2/L623	C	Vortex 6 Valve Equipment Vault w/Junction Box VOR–1608.35A0R06	1	
1/L623	D	Vortex 10 Output Smartflow 2 Controller VOR–710.6000	1	
4/L622	E	Electrical Conduit from Controller to Activator; 2 Conductors#14 AWG W/ #8 Ground		1"
4/L622	F	Electrical Service 120 VAC, 20AMP Service		1"
2/L622	G	Water Supply Line Copper		2"
	H	Solenoid Valve	6	1–1/2"

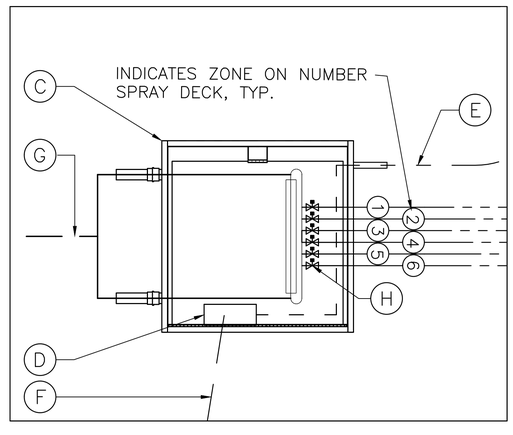

1 DETAIL "A" ENLARGEMENT
N.T.S.

Carolyn Cooney & Associates
Landscape Architecture / Planning
13 Elm Street, Milford, MA 01757
Telephone 508 478 8426, Facsimile 508 478 8607

Site Engineering Consultants, Inc.
55 Grape Shot Road
Sharon, Massachusetts 02067
TEL: (781) 784-0326
FAX: (781) 784-0492
CONSULTING CIVIL ENGINEERS

No.	Description	Date

REVISIONS

North

Project:

CITY OF WALTHAM
GRAVERSON PLAYGROUND
16 PINE VALE ROAD
WALTHAM, MA 02451

Prepared For:

CITY OF WALTHAM
DEPARTMENT OF RECREATION
510 MOODY STREET
WALTHAM, MA 02453

TITLE:

SPRAY AREA ENLARGEMENT PLAN

Scale 1/4"=1'–0" Date OCT 31, 2017
Drawn By DRB
Checked By CCC
Approved By CCC
Project No. 1710.00

DWG No. L.620

675

EXIST. SMH
RIM=201.51
INV.(8"EXIST)=196.00
INV.(8"EXIST)=195.80
INV.(6"PROP.)=196.27

GATE VALVE

DMH1
RIM=200.50
INV.(1)=198.86
INV.(2)=198.86
INV.(SEWER)=198.86

2" WATER
TYPE K COPPER

GATE VALVE

2" WATER
TYPE K COPPER

NEW 2" CORPORATION
STOP WITH DIRECT TAP

L=16'
D=6"PVC
S=0.75%

AREA DRAINS (3)
RIM=200.40
INV.=198.98

D=6"HDPE
(SET LEVEL)

L=225'
S=1.15%

6" HEADER PIPE
(SET LEVEL)

L=60'
D=6"HDPE
S=0.75%

GATE VALVE

SUBSURFACE RECHARGE SYSTEM
STORMTECH SC-310 RECHARGE
UNITS OR APPROVED EQUAL.
(8 CHAMBERS)

16.00'
12.33'

CO1
RIM=200.50
INV.(1)=198.41
INV.(2)=198.41

TP #1
TP #1A
TP #2
TP #4
TP #6

TEST
HOLE
#1A
(T.P. 1A)

0"	EXIST. GRADE = 200.50
	LOAM A
32"	197.83
	CINDERS / ASH (FILL)
40"	197.17
	LOAM C
BOTTOM OF PIT= 65"	195.08

GROUNDWATER ENCOUNTERED AT 65" (SEEPAGE)

NOTE:
IF UNSUITABLE SOILS ARE ENCOUNTERED DURING EXCAVATION FOR UTILITIES OR OTHER STRUCTURES, THE CONTRACTOR SHALL NOTIFY THE ENGINEER. ANY UNSUITABLE SOILS SHALL BE REMOVED AND REPLACED WITH CLEAN GRANULAR FILL.

GENERAL NOTES:

1. THIS DRAWING RELATES TO SPRAY DECK DRAINAGE UTILITIES. FOR COMPLETE SITE GRADING & DRAINAGE REFER TO L.401.

0 20 40 60

Carolyn Cooney & Associates
Landscape Architecture / Planning
13 Elm Street, Milford, MA 01757
Telephone 508 478 8426, Facsimile 508 478 8607

Site Engineering Consultants, Inc.
55 Grape Shot Road
Sharon, Massachusetts 02067
TEL: (781) 784-0326
FAX: (781) 784-0492
CONSULTING CIVIL ENGINEERS

No.	Description	Date

REVISIONS

North

Project:

CITY OF WALTHAM
GRAVERSON PLAYGROUND
16 PINE VALE ROAD
WALTHAM, MA 02451

Prepared For:

CITY OF WALTHAM
DEPARTMENT OF RECREATION
510 MOODY STREET
WALTHAM, MA 02453

TITLE:

SPRAY AREA UTILITIES PLAN

Scale 1"=20' Date OCT 31, 2017
Drawn By CCC
Checked By DRB
Approved By CCC
Project No. 1710.00

DWG No. L.620A

676

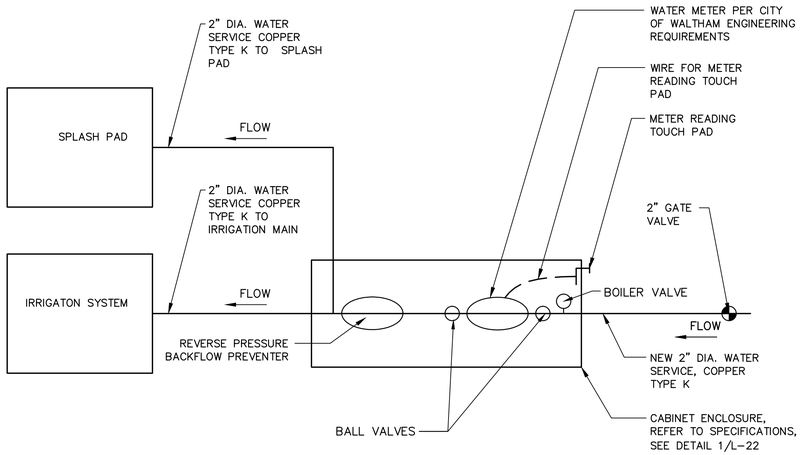

ELEVATION

7 WATER SERVICE ONE LINE SCHEMATIC DIAGRAM
N.T.S.

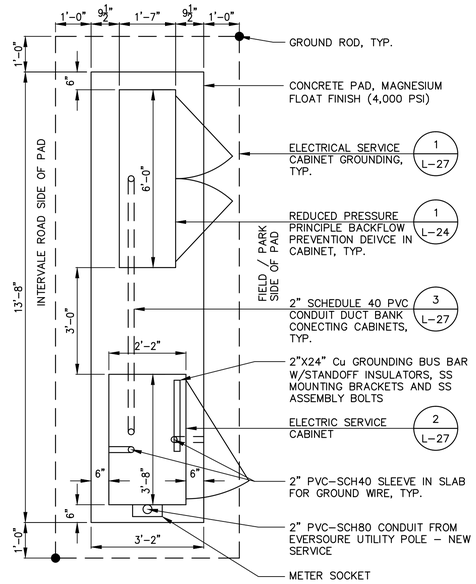

SECTION

5 COMMAND CENTER LAYOUT PLAN
1/2" = 1'-0"

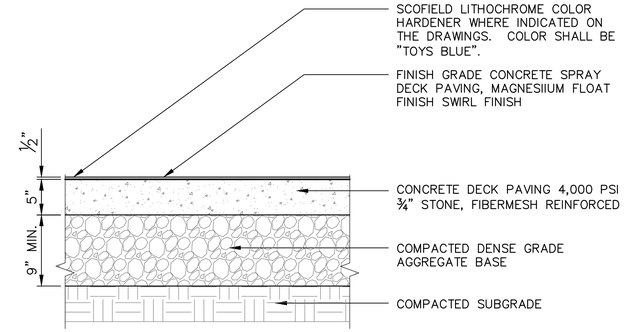

SECTION

1 TYPICAL SPRAY DECK PAVEMENT W/LITHOCHROME COLOR HARDENER, TYP.
N.T.S.

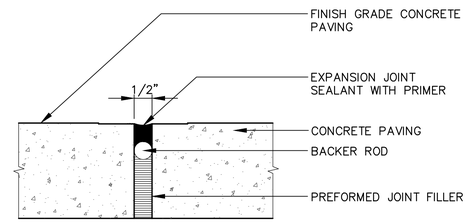

SECTION

2 TYPICAL CONCRETE DECK EXPANSION JOINT DETAIL
N.T.S.

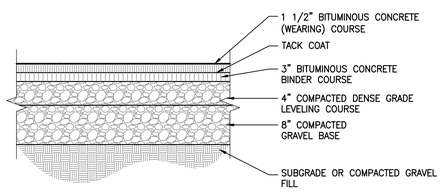

SECTION

8 TYPICAL BITUMINOUS CONCRETE STREET RESTORATION DETAIL
N.T.S.

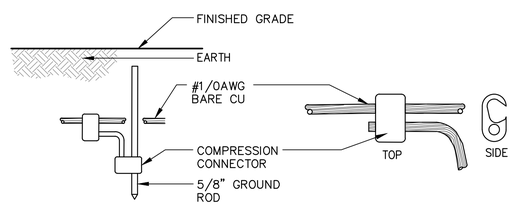

ROD TO CABLE CONNECTION TAP CABLE CONNECTION

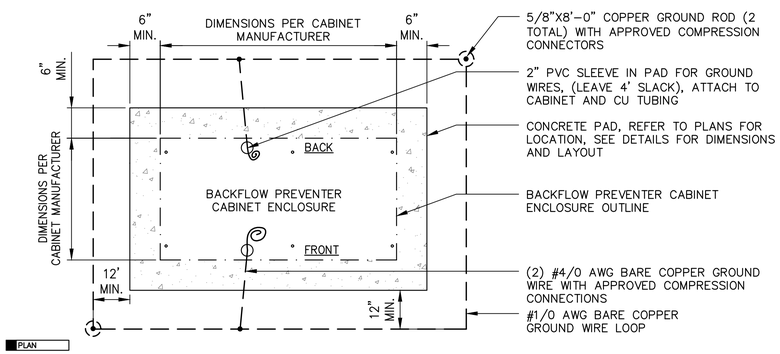

PLAN

6 WATER SERVICE CABINET GROUNDING PLAN
N.T.S.

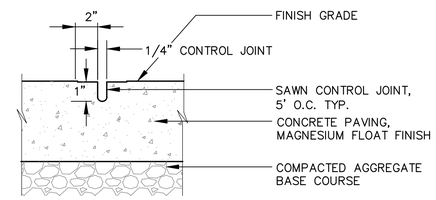

SECTION

3 TYPICAL CONCRETE DECK CONTROL JOINT DETAIL
N.T.S.

Carolyn Cooney & Associates
Landscape Architecture / Planning
13 Elm Street, Milford, MA 01757
Telephone 508 478 8426, Facsimile 508 478 8607

Site Engineering Consultants, Inc.
55 Grape Shot Road
Sharon, Massachusetts 02067
TEL: (781) 784-0326
FAX: (781) 784-0492
CONSULTING CIVIL ENGINEERS

No.	Description	Date

REVISIONS

Project:

CITY OF WALTHAM
GRAVERSON PLAYGROUND
16 PINE VALE ROAD
WALTHAM, MA 02451

Prepared For:

CITY OF WALTHAM
DEPARTMENT OF RECREATION
510 MOODY STREET
WALTHAM, MA 02453

TITLE:

SPRAY AREA DETAILS 1

Scale AS NOTED Date OCT 31, 2017
Drawn By DRB
Checked By CCC
Approved By CCC
Project No. 1710.00

DWG No. L.621

677

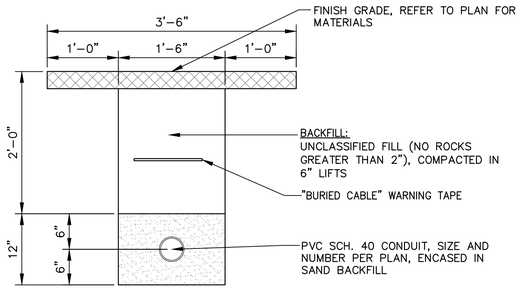

ELEVATION

4 CONDUIT DUCTBANK CROSS-SECTION DETAIL

N.T.S.

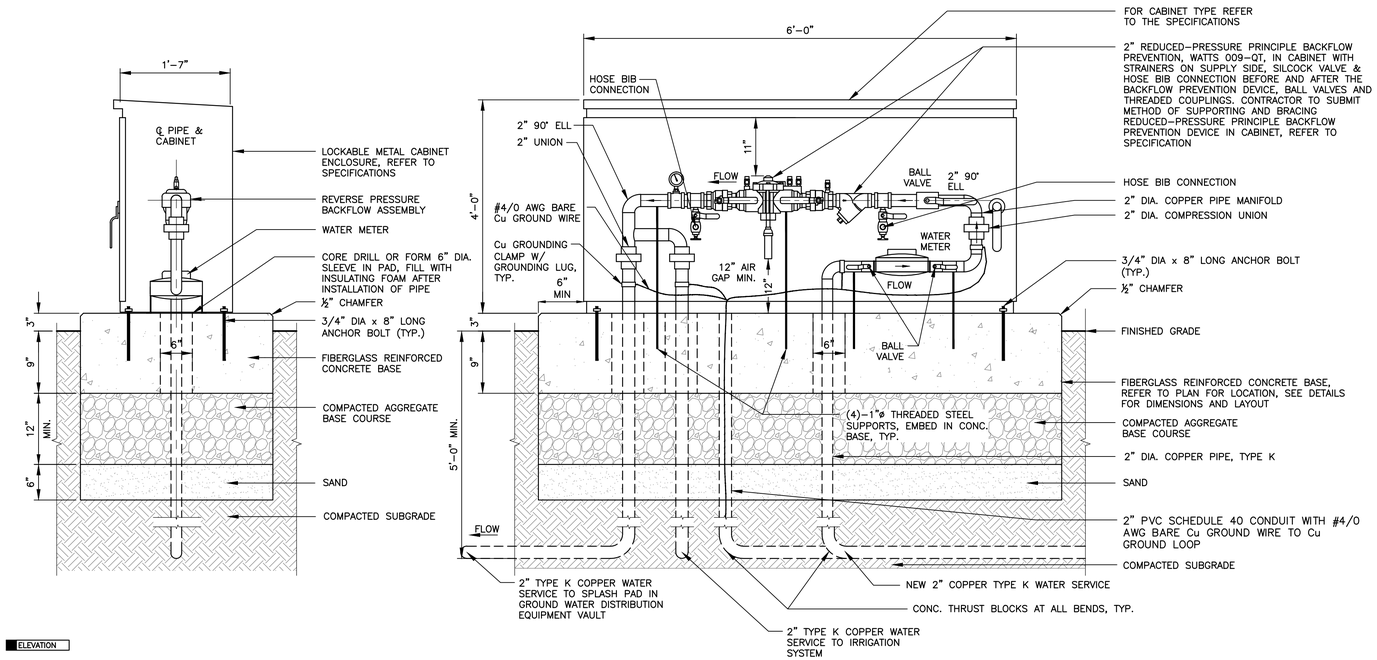

ELEVATION

1 REDUCED-PRESSURE PRINCIPLE BACKFLOW-PREVENTION DEVICE DETAIL, TYP.

N.T.S.

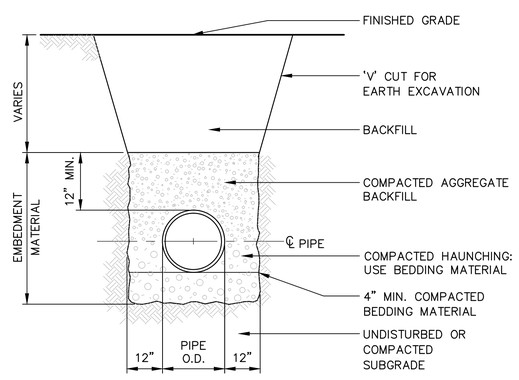

SECTION

5 STORM DRAIN PIPE AND SEWER PIPE TRENCH DETAIL, TYP.

N.T.S.

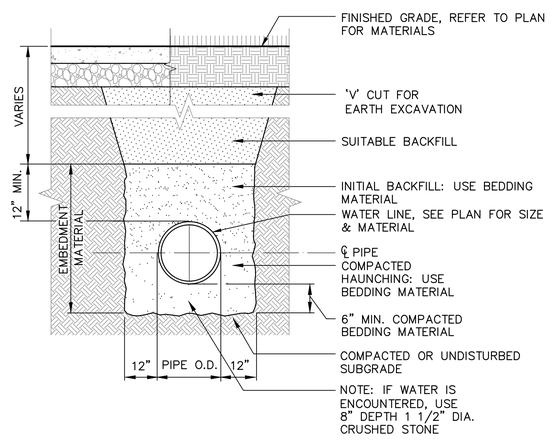

SECTION

3 WATER LINE TRENCH DETAIL

N.T.S.

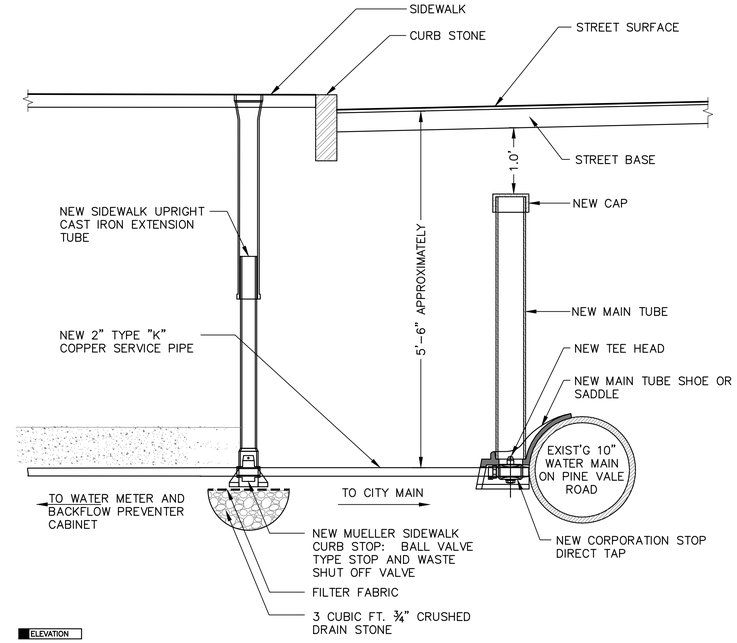

ELEVATION

2 WATER SERVICE TRENCH PROFILE DETAIL

N.T.S.

Carolyn Cooney & Associates

Landscape Architecture / Planning

13 Elm Street, Milford, MA 01757
Telephone 508 478 8426, Facsimile 508 478 8607

No.	Description	Date

REVISIONS

Project:

CITY OF WALTHAM
GRAVERSON PLAYGROUND
16 PINE VALE ROAD
WALTHAM, MA 02451

Prepared For:

CITY OF WALTHAM
DEPARTMENT OF RECREATION
510 MOODY STREET
WALTHAM, MA 02453

TITLE:

SPRAY AREA DETAILS 2

Scale AS NOTED Date OCT 11, 2017
Drawn By DRB
Checked By CCC
Approved By CCC
Project No. 1710.00

DWG No. L.622

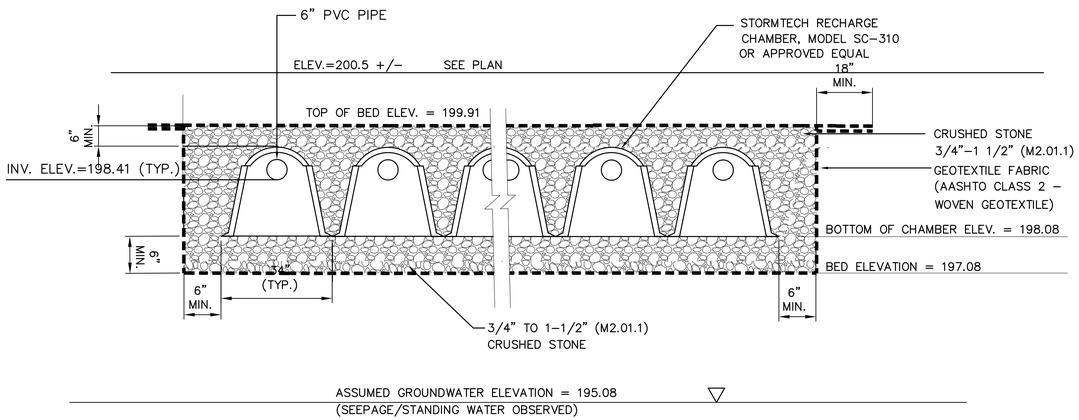

SECTION

1 STORMWATER RECHARGE CROSS SECTION DETAIL, TYP.
N.T.S.

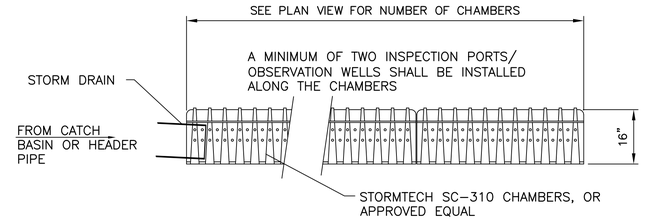

PROPOSED RECHARGE TRENCH PROFILE

2 STORMWATER RECHARGE UNIT DETAIL, TYP.
N.T.S.

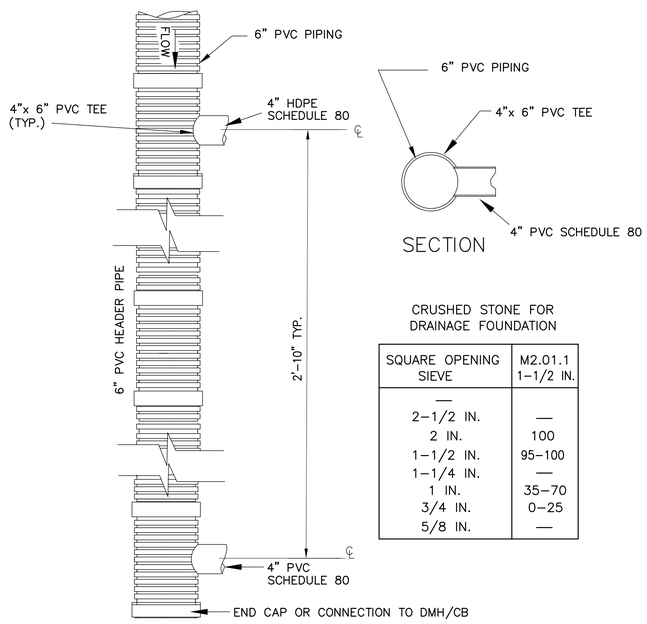

CRUSHED STONE FOR DRAINAGE FOUNDATION

SQUARE OPENING SIEVE	M2.01.1 1-1/2 IN.
—	
2-1/2 IN.	—
2 IN.	100
1-1/2 IN.	95-100
1-1/4 IN.	—
1 IN.	35-70
3/4 IN.	0-25
5/8 IN.	—

3 RECHARGE SYSTEM HEADER CONNECTION
N.T.S.

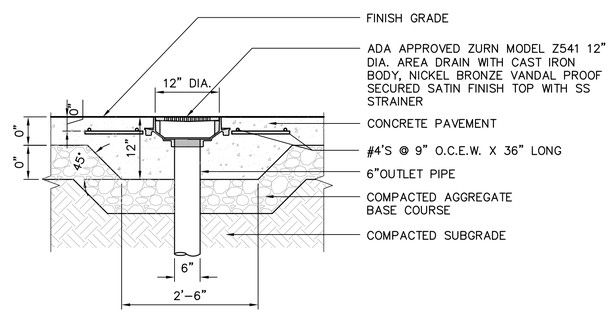

4 AREA DRAIN DETAIL
N.T.S.

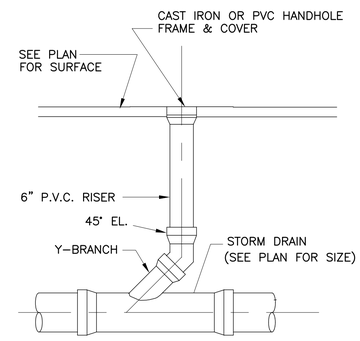

5 CLEANOUT DETAIL
N.T.S.

Carolyn Cooney & Associates
Landscape Architecture / Planning
13 Elm Street, Milford, MA 01757
Telephone 508 478 8426, Facsimile 508 478 8607

Site Engineering Consultants, Inc.
55 Grape Shot Road
Sharon, Massachusetts 02067
TEL: (781) 784-0326
FAX: (781) 784-0492
CONSULTING CIVIL ENGINEERS

No.	Description	Date

REVISIONS

Project:

CITY OF WALTHAM
GRAVERSON PLAYGROUND
16 PINE VALE ROAD
WALTHAM, MA 02451

Prepared For:

CITY OF WALTHAM
DEPARTMENT OF RECREATION
510 MOODY STREET
WALTHAM, MA 02453

TITLE:

SPRAY AREA DETAILS 3

Scale AS NOTED Date OCT 11, 2017
Drawn By DRB
Checked By CCC
Approved By CCC
Project No. 1710.00

DWG No. L.622A

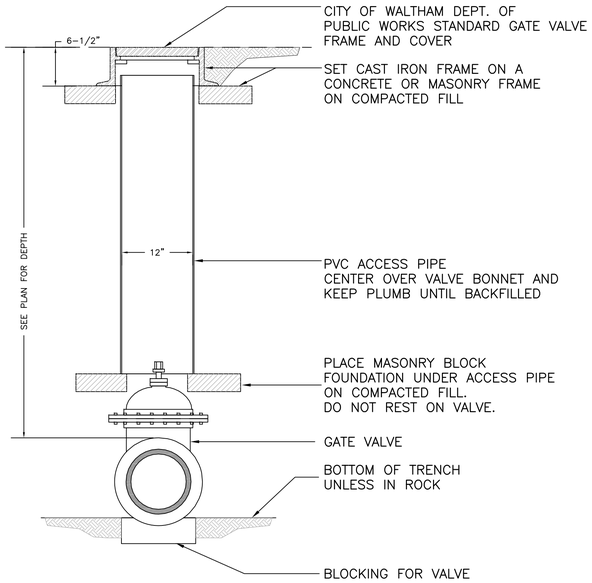

NOTE: ALL GATE VALVES 8" OR LARGER REQUIRE A 12" DIAMETER STANDPIPE AND A 16"x18" FRAME AND COVER.

1 GATE VALVE DETAIL
N.T.S.

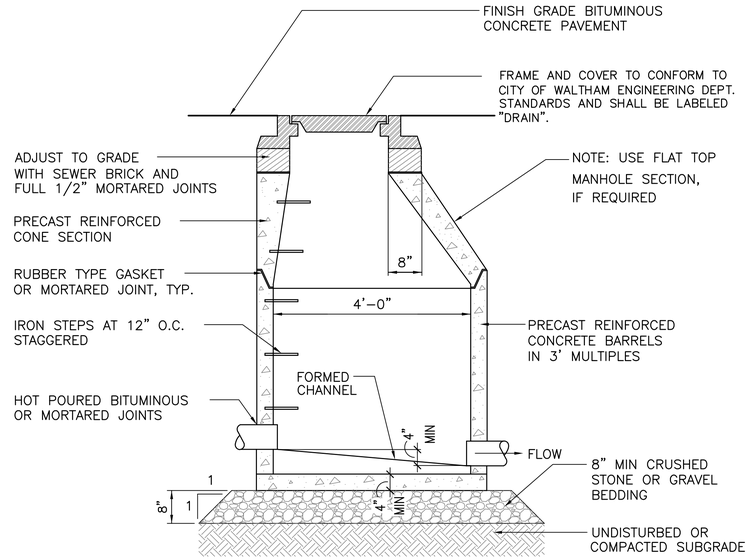

2 MANHOLE DETAIL
N.T.S.

Carolyn Cooney & Associates
Landscape Architecture / Planning
13 Elm Street, Milford, MA 01757
Telephone 508 478 8426, Facsimile 508 478 8607

Site Engineering Consultants, Inc.
55 Grape Shot Road
Sharon, Massachusetts 02067
TEL: (781) 784-0326
FAX: (781) 784-0492
CONSULTING CIVIL ENGINEERS

COMMONWEALTH OF MASSACHUSETTS
ANTHONY STELLA
CIVIL
No. 33383
REGISTERED PROFESSIONAL ENGINEER

No.	Description	Date

REVISIONS

Project:

CITY OF WALTHAM
GRAVERSON PLAYGROUND
16 PINE VALE ROAD
WALTHAM, MA 02451

Prepared For:

CITY OF WALTHAM
DEPARTMENT OF RECREATION
510 MOODY STREET
WALTHAM, MA 02453

TITLE:

SPRAY AREA
DETAILS 4

Scale AS NOTED Date OCT 11, 2017
Drawn By DRB
Checked By CCC
Approved By CCC
Project No. 1710.00

DWG No. L.622B

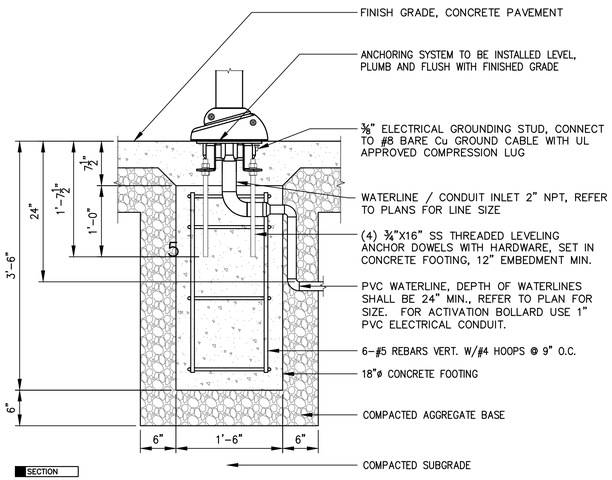

4 SAFESWAP OR EQUAL ANCHORING SYSTEM INSTALLATION DETAIL
SCALE 1"=1'-0"

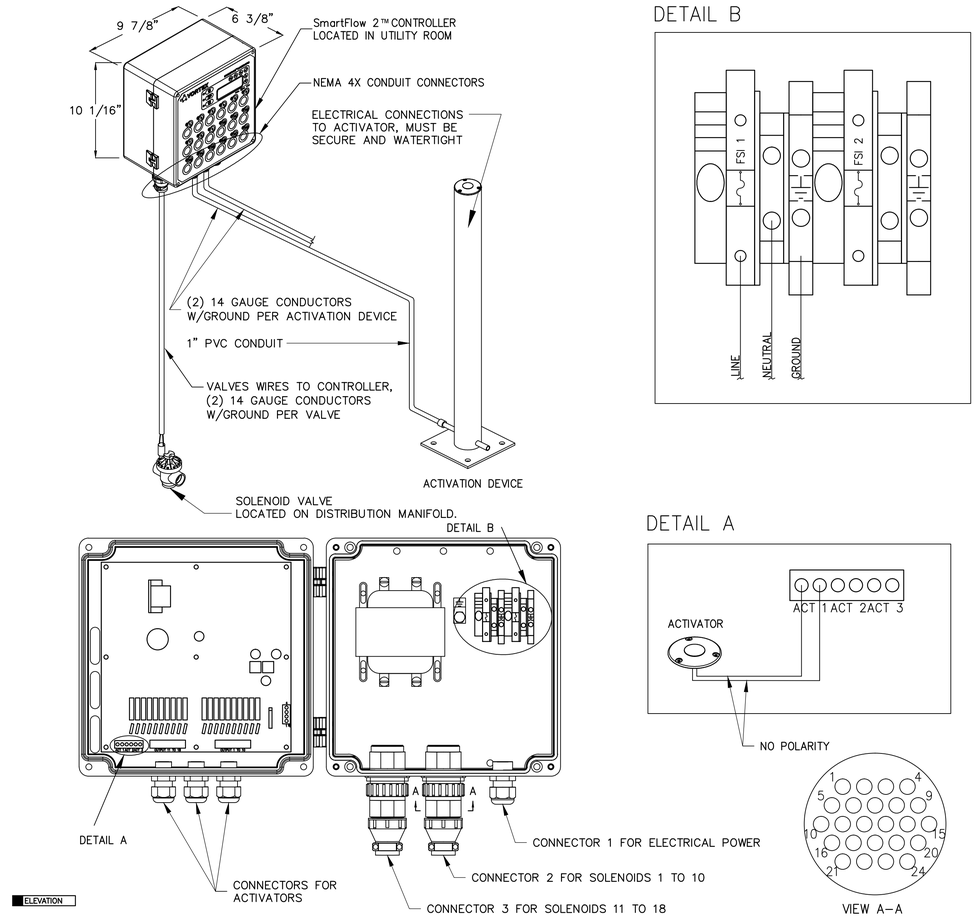

DETAIL B

PIN	CONNECTOR	SIGNAL
1–2	1	OUTPUT 1
3–4	1	OUTPUT 2
5–6	1	OUTPUT 3
7–8	1	OUTPUT 4
9–10	1	OUTPUT 5
11–12	1	OUTPUT 6
13–14	1	OUTPUT 7
15–16	1	OUTPUT 8
17–18	1	OUTPUT 9
19–20	1	OUTPUT 10
21–22	1	RAIN DIVERTER
23–24	1	N/A
1–2	2	OUTPUT 11
3–4	2	OUTPUT 12
5–6	2	OUTPUT 13
7–8	2	OUTPUT 14
9–10	2	OUTPUT 15
11–12	2	OUTPUT 16
13–14	2	OUTPUT 17
15–16	2	OUTPUT 18
17–18	2	OUTPUT 16
19–20	2	OUTPUT 17
21–22	2	OUTPUT 18
23–24	2	N/A

NOTE:
FSI 1 – TERMINAL FUSE BLOCK
2 AMPS 120 VAC TYPE GDC–2A
1 AMPS 240 VAC TYPE GDC–1A

FSI 2 – TERMINAL FUSE BLOCK
4 AMPS 240 VAC TYPE GDC–4A

ANY ADDITIONAL FIELD HOLES IN THE ENCLOSURE SHALL BE DONE USING NEMA 4X COMPLIANT CONNECTOR. FAILURE TO DO SO WILL VOID THE NEMA 4X OF THE ENCLOSURE.

DETAIL A

1 VORTEX SMART TOUCH CONTROLLER
N.T.S.

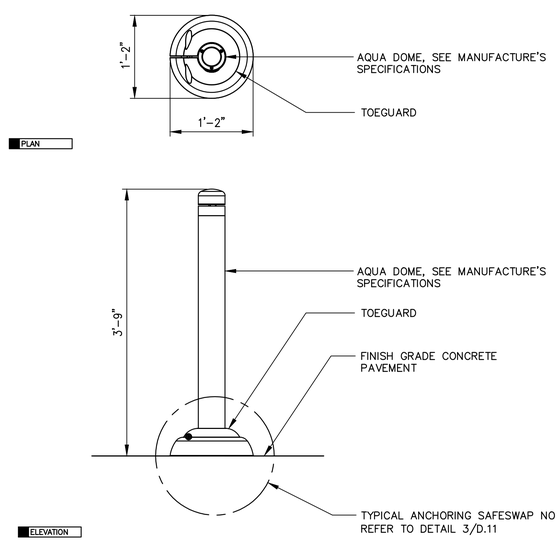

3 AQUADOME NO.1 DETAIL
SCALE 1"=1'-0"

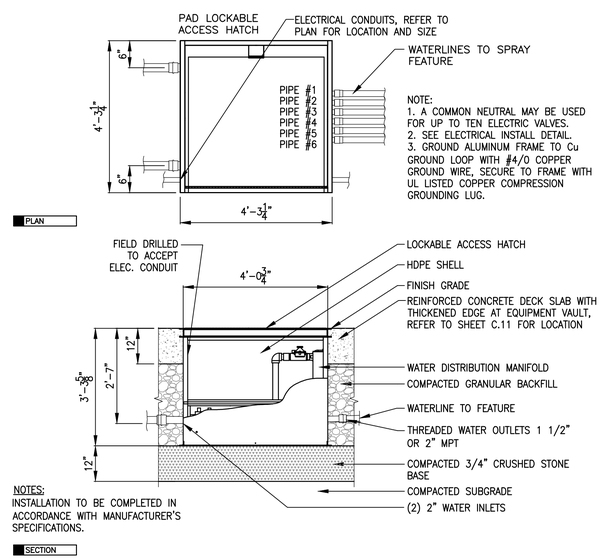

NOTE:
1. A COMMON NEUTRAL MAY BE USED FOR UP TO TEN ELECTRIC VALVES.
2. SEE ELECTRICAL INSTALL DETAIL.
3. GROUND ALUMINUM FRAME TO Cu GROUND LOOP WITH #4/0 COPPER GROUND WIRE, SECURE TO FRAME WITH UL LISTED COPPER COMPRESSION GROUNDING LUG.

NOTES:
INSTALLATION TO BE COMPLETED IN ACCORDANCE WITH MANUFACTURER'S SPECIFICATIONS.

2 INGROUND EQUIPMENT VAULT INSTALLATION DETAIL
SCALE 1/2" = 1'-0"

Carolyn Cooney & Associates
Landscape Architecture / Planning
13 Elm Street, Milford, MA 01757
Telephone 508 478 8426, Facsimile 508 478 8607

Site Engineering Consultants, Inc.
55 Grape Shot Road
Sharon, Massachusetts 02067
TEL: (781) 784-0326
FAX: (781) 784-0492
CONSULTING CIVIL ENGINEERS

No.	Description	Date

REVISIONS

Project:

CITY OF WALTHAM
GRAVERSON PLAYGROUND
16 PINE VALE ROAD
WALTHAM, MA 02451

Prepared For:

CITY OF WALTHAM
DEPARTMENT OF RECREATION
510 MOODY STREET
WALTHAM, MA 02453

TITLE:

SPRAY FEATURE DETAILS 1

Scale AS NOTED Date OCT 31, 2017
Drawn By DRB
Checked By CCC
Approved By CCC
Project No. 1710.00

DWG No. L.623

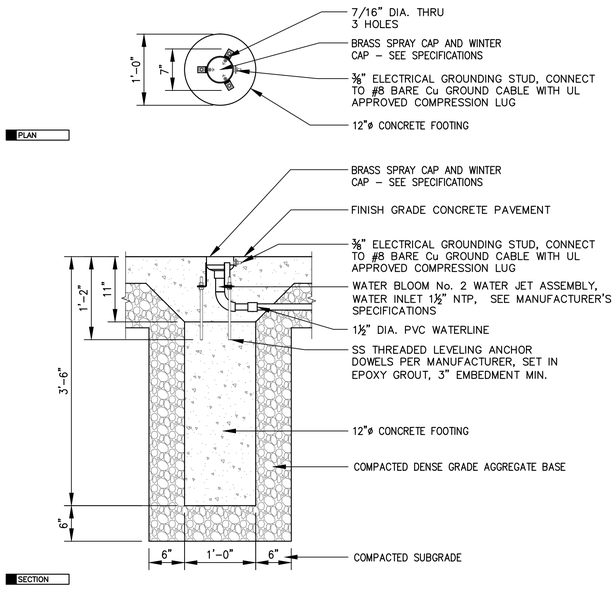

5 WATER BLOOM No. 1 SPRAY FEATURE INSTALLATION DETAIL
SCALE 1"=1'-0"

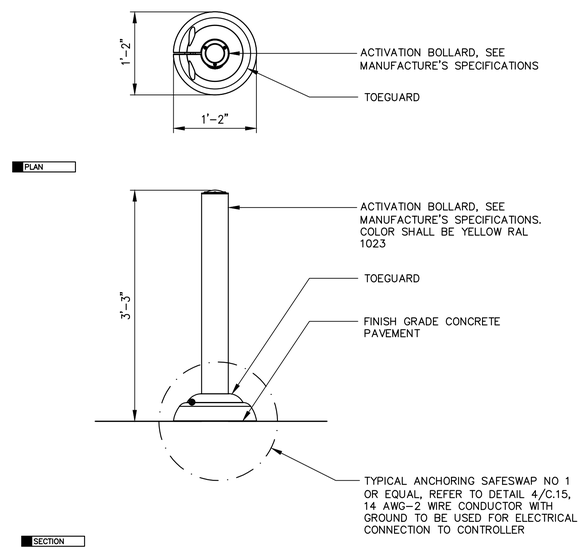

3 ACTIVATION BOLLARD DETAIL (1) REQUIRED
SCALE 1"=1'-0"

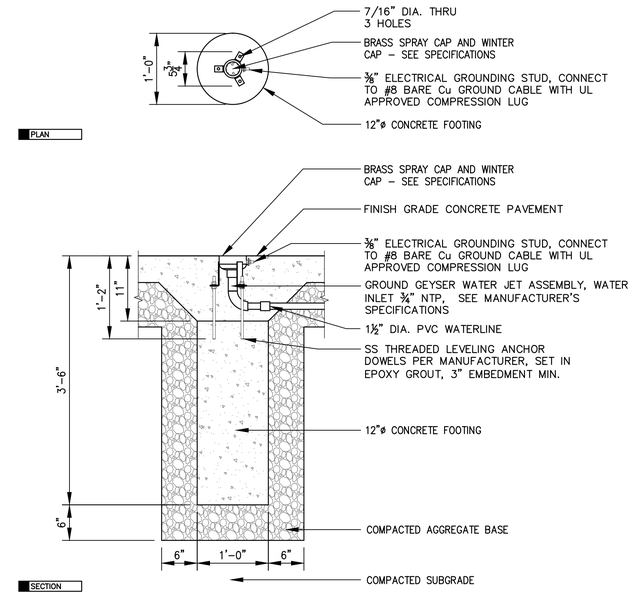

1 GROUND GEYSER WATER JET INSTALLATION DETAIL (4) REQUIRED
SCALE 1"=1'-0"

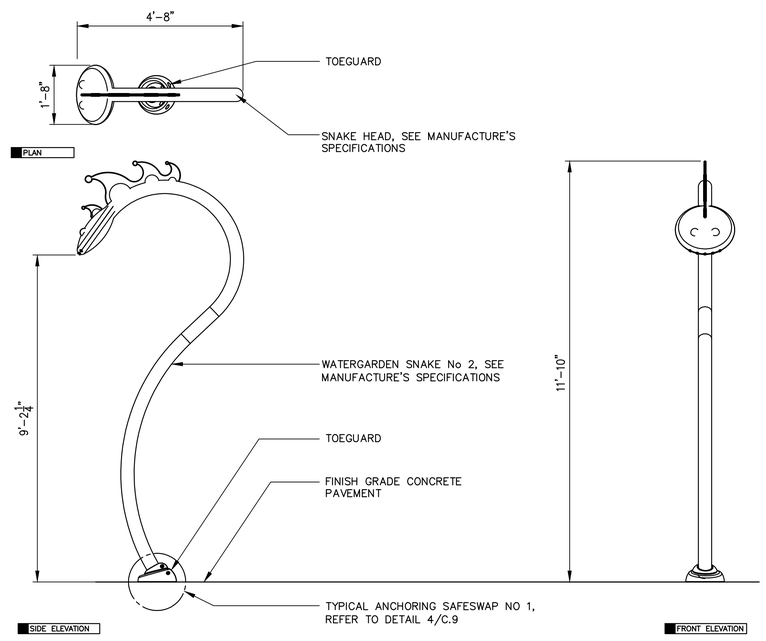

4 WATERGARDEN SNAKE NO. 2 INSTALLATION DETAIL
SCALE 1/2"=1'-0"

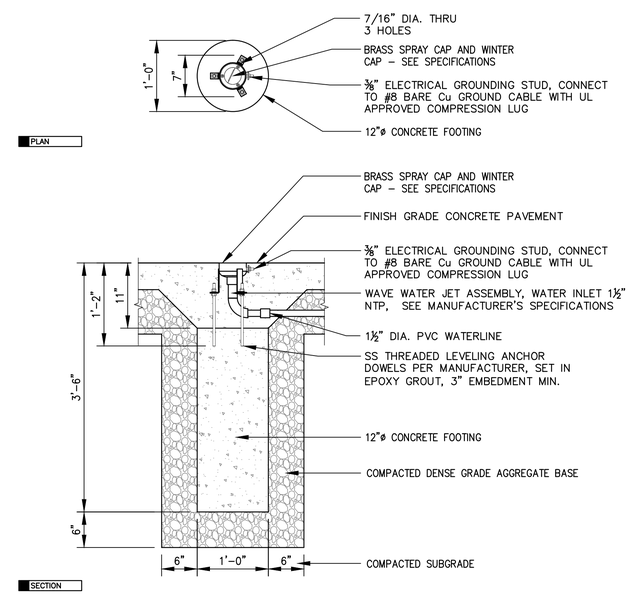

2 WAVE SPRAY FEATURE INSTALLATION DETAIL
SCALE 1"=1'-0"

Carolyn Cooney & Associates
Landscape Architecture / Planning
13 Elm Street, Milford, MA 01757
Telephone 508 478 8426, Facsimile 508 478 8607

Site Engineering Consultants, Inc.
55 Grape Shot Road
Sharon, Massachusetts 02067
TEL: (781) 784-0326
FAX: (781) 784-0492
CONSULTING CIVIL ENGINEERS

No.	Description	Date

REVISIONS

Project:

CITY OF WALTHAM
GRAVERSON PLAYGROUND
16 PINE VALE ROAD
WALTHAM, MA 02451

Prepared For:

CITY OF WALTHAM
DEPARTMENT OF RECREATION
510 MOODY STREET
WALTHAM, MA 02453

TITLE:

SPRAY FEATURE
DETAILS 2

Scale	AS NOTED Date OCT 31, 2017
Drawn By	DRB
Checked By	CCC
Approved By	CCC
Project No.	1710.00

DWG No. L.624

682

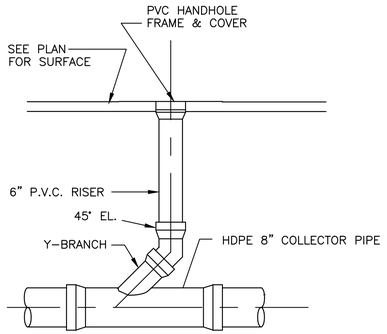

1 UNDERDRAIN CLEANOUT DETAIL
N.T.S.

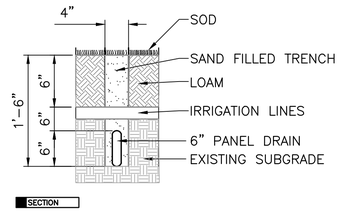

2 PANEL DRAIN DETAIL
N.T.S.

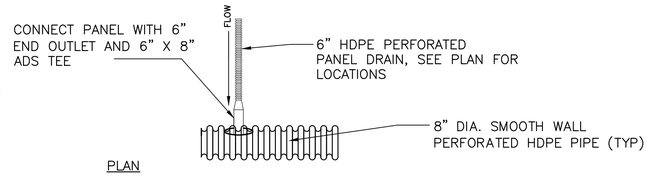

3 PANEL DRAIN CONNECTION DETAIL
N.T.S.

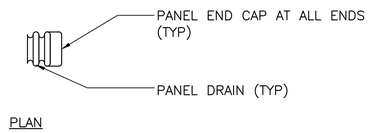

4 PANEL DRAIN END CAP DETAIL
N.T.S.

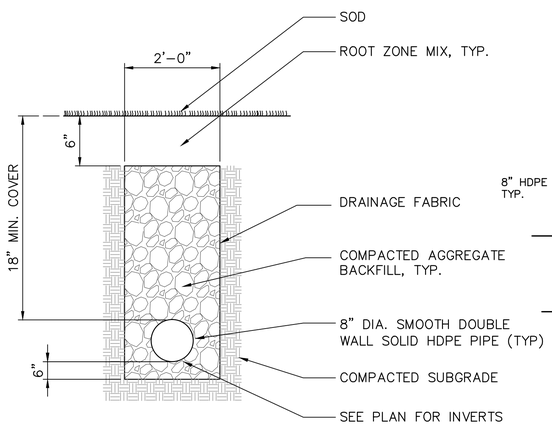

5 COLLECTOR PIPE
N.T.S.

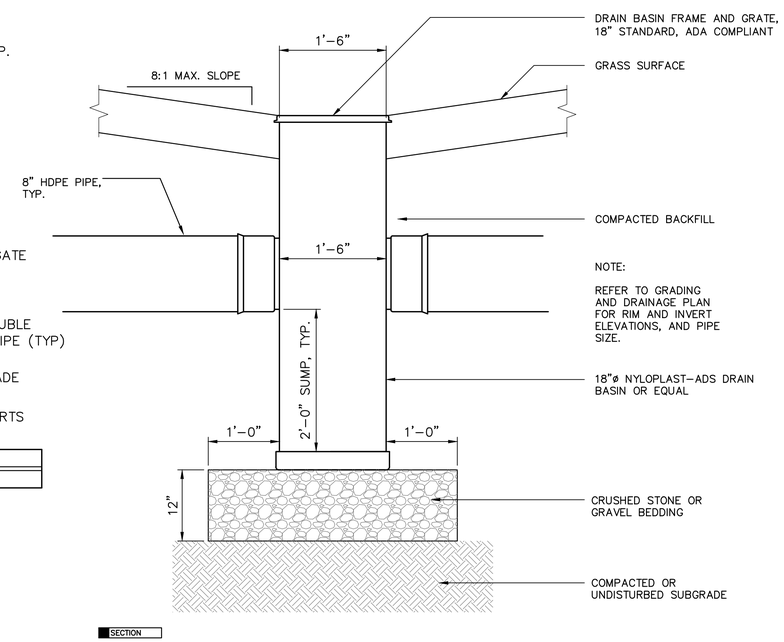

6 DRAIN BASIN DETAIL, TYP.
N.T.S.

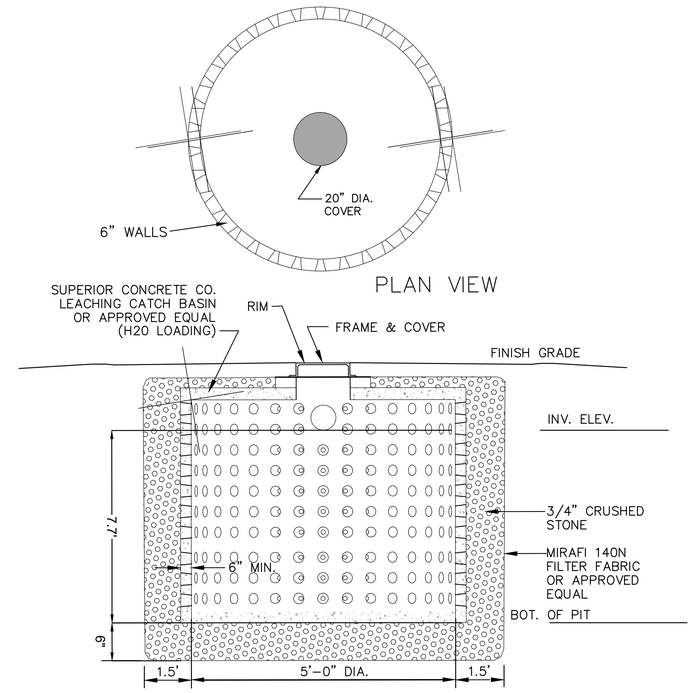

7 LEACHING BASIN DETAIL
N.T.S.

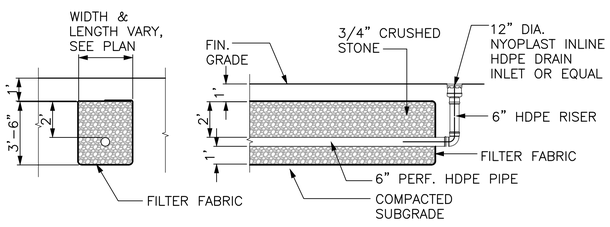

8 STONE INFILTRATION TRENCHES & BED WITH IN-LINE DRAINS
N.T.S.

Carolyn Cooney & Associates
Landscape Architecture / Planning
13 Elm Street, Milford, MA 01757
Telephone 508 478 8426, Facsimile 508 478 8607

Site Engineering Consultants, Inc.
55 Grape Shot Road
Sharon, Massachusetts 02067
TEL: (781) 784-0326
FAX: (781) 784-0492
CONSULTING CIVIL ENGINEERS

Carolyn Cooney 10-23-17

No.	Description	Date

REVISIONS

Project:

CITY OF WALTHAM
GRAVERSON PLAYGROUND
16 PINE VALE ROAD
WALTHAM, MA 02451

Prepared For:

CITY OF WALTHAM
DEPARTMENT OF RECREATION
510 MOODY STREET
WALTHAM, MA 02453

TITLE:

DRAINAGE DETAILS 1

Scale AS NOTED Date OCT 31, 2017
Drawn By DRB
Checked By CCC
Approved By CCC
Project No. 1710.00

DWG No. L.625

683

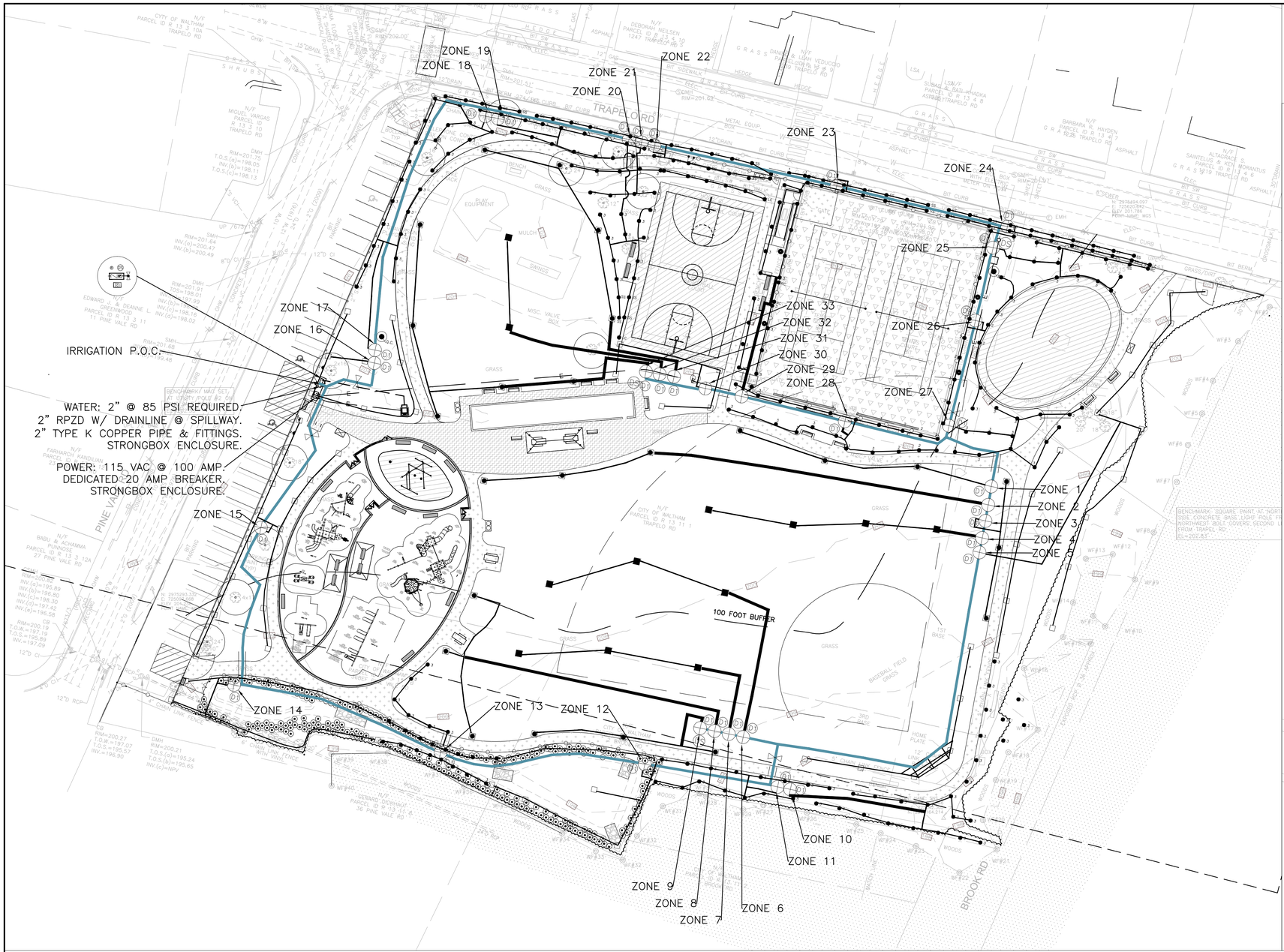

LEGEND FOR IRRIGATION

Irrigation Pipe Table

Quantity	Symbol	Pipe
1700'		PE MAIN: CLASS 100 2" POLY PIPE W/ WIRE
900'		PE LATERALS: CLASS 100 2" POLY PIPE
2000'		PE LATERALS: CLASS 100 1 1/2" POLY PIPE
4040'		PE LATERALS: CLASS 100 1" POLY PIPE
100'		PVC SLEEVES: CLASS 200 4" PVC PIPE
2000'	(no symbol)	WIRE: #14/2 UF, GROUND EVERY 500'

* PIPE & WIRE QUANTITIES ARE ROUNDED TO THE NEAREST ROLL OR LENGTH.

Irrigation Equipment Table

Quantity	Symbol	Equipment
33		ZONE VALVE: HUNTER PGV-151G 1 1/2" W/ DECODER
2		QUICK COUPLER VALVE: HUNTER 1" HQ-44 W/ HK-44 KEY
33, 4		DECODERS: HUNTER DUAL-1 & DUAL-S W/ 8' GROUND ROD
4		ISOLATION VALVES: BRASS GATE VALVE, LINE SIZED
1	C	CONTROLLER: HUNTER IC-600-PL W/ DUAL-48M 2 WIRE MODULE
1		RAIN SENSOR: HUNTER RAINCLIK
1		CONTROLLER ENCLOSURE: STRONGBOX SB-18SS ON CONCRETE PAD
1		POINT OF CONNECTION: 2" @ 85 PSI. INSTALL SHUT OFF W/ DRAIN.
1		BLOW OUT: TEE CONNECTION
1		BACKFLOW: 2" RPZD W/ DRAIN ON 2" COPPER PIPE
1		BACKFLOW ENCLOSURE: STRONGBOX SBBC-60ALHP ON CONCRETE PAD

Irrigation Heads Table

Quantity	Symbol	Sprinkler Heads
12		LARGE ROTARY SPRINKLER: HUNTER I-25-04-SS-10, FULL CIRCLE
24		LARGE ROTARY SPRINKLER: HUNTER I-25-04-SS-10, ADJUSTABLE
#5: 2, #2.5: 64		MEDIUM ROTARY SPRINKLER: HUNTER I-20-04-SS-3, ADJUSTABLE
168	12	SPRAY HEAD: HUNTER PROS-04, 15A NOZZLE
38	12	SPRAY HEAD: HUNTER PROS-04, 12A NOZZLE
4	1	SPRAY HEAD: HUNTER PROS-04, 8A NOZZLE
64	19	SPRAY HEAD: HUNTER PROS-04, SS530 NOZZLE
6	6	SPRAY HEAD: HUNTER PROS-04, RCS 515 NOZZLE
5	6	SPRAY HEAD: HUNTER PROS-04, LCS515 NOZZLE

NOTES FOR IRRIGATION

1) SYSTEM IS DESIGNED FOR UP TO 45 GPM PER ZONE AND 60 GPM FROM RUNNING MULTIPLE ZONES AT ONCE. CONTROLLER SHALL BE PROGRAMMED TO RUN UP TO 2 ZONES AT ONCE. PRESSURE REQUIRED AT THE INLET TO THE 2" RPZD IS 85 PSI.

PRESSURE SHALL BE VERIFIED PRIOR TO THE COMMENCEMENT OF WORK. IN THE EVENT THE PRESSURE IS NOT ADEQUATE ENOUGH TO RUN THIS SYSTEM, NOTIFY THE OWNER PRIOR TO BEGINNING INSTALLATION.

2) INSTALLATION INSTRUCTIONS:

HEADS: INSTALL 1" INLET SPRINKLERS ON STANDARD 12" SWING JOINTS. INSTALL 3/4" INLET SPRINKLERS ON FLEXIBLE PIPE SWING JOINTS. SET TO GRADE. BACKFILL IN CLEAN MATERIAL. PROPERLY ADJUST THROW, ARC, AND FIELD POSITION FOR OPTIMUM PERFORMANCE.

DECODERS: INSTALL (1) DECODER PER VALVE. USE (4) DBY-R SPLICE KITS. INSTALL SURGE DECODER W/ GROUND ROD EVERY 500'. FITTINGS AS NECESSARY. RUN #14/2 UF DECODER CABLE ACCORDING TO MANUFACTURER'S INSTALLATION INSTRUCTIONS.

VALVES: INSTALL A GATE VALVE BEFORE EACH CONTROL VALVE. FROM MAINLINE – NIPPLE, ELBOW, REDUCER, NIPPLE, GATE VALVE, NIPPLE, CONTROL VALVE, NIPPLE, LATERAL. PVC NIPPLES & FITTINGS AS NECESSARY. INSTALL A DECODER USING (4) DBY-4 SPLICE KITS. INSTALL GATE VALVE IN STANDARD VALVE BOX W/ EXTENSION. INSTALL 1" QUICK COUPLER ON SWING JOINT WITH BRASS STABILIZER EL & SUPPORT AND IN A 10" ROUND VALVE BOX. FIELD LOCATE ALL ITEMS.

CONTROLLER: WALL MOUNT ON A BACKBOARD IN ENCLOSURE. GROUND USING A 4" x 96" GROUND PLATE. SURGE DECODER. #6 BARE COPPER. INSTALL ACCORDING TO MANUFACTURER'S RECOMMENDATIONS. INSTALL CONDUIT THRU THE CONCRETE PAD INTO GRADE. INSTALL CONDUIT TO THE RAIN SENSOR. INSTALLER SHALL PROPERLY LOCATE THE RAIN SENSOR FOR OPTIMUM PERFORMANCE. INSTALL NECESSARY WIRES & CONNECTORS.

POINT OF CONNECTION: GENERAL CONTRACTOR TO PROVIDE 2" WATER TAP @ 85 PSI MINIMUM. INSTALL 2" TYPE K COPPER PIPE & FITTINGS. FOLLOW ALL APPLICABLE CODES.

BACKFLOW: IRRIGATION TO PROVIDE 2" RPZD. G.C. SHALL PROVIDE A PLUMBER TO INSTALL BACKFLOW. INSTALL 2" RPZD (FLOWS UP TO 130 GPM) ON 2" TYPE K COPPER PIPE. FITTINGS AS NECESSARY. FOLLOW ALL APPLICABLE CODES. LOCATE IN FIELD HOUSE.

PIPE & WIRE: PE MAIN: TRENCH OR VIBRATORY PLOW 18" DEEP. INSTALL WITH WIRE. LATERALS: TRENCH OR PLAL 12" DEEP. FITTINGS AS REQUIRED. ALL FITTINGS TO BE SOLVENT WELD, SCH. 40 PVC.

WIRE: TO BE #14/2 U.F. DECODER CABLE. FOLLOW MANUFACTURERS RECOMMENDATIONS. NO CONDUIT NEEDED FOR 2 WIRE IF INSTALLED WITH THE MAINLINE.

3) DESIGN IS DIAGRAMMATIC. INSTALLER SHALL FIELD LOCATE ALL ITEMS WITHOUT COMPROMISING THE INTEGRITY OF THIS DESIGN. ANY CHANGES TO THE NUMBER OF HEADS OR VALVES, OR TO THE HYDRAULICS SHALL BE SUBMITTED TO THE ARCHITECT PRIOR TO THE COMMENCEMENT OF WORK. PIPE ROUTING, HEAD AND VALVE PLACEMENT SHALL BE THE RESPONSIBILITY OF THE INSTALLER, USING THIS DESIGN AS A GUIDE.

4) AVERAGE RUN TIMES PER ZONE TO ACHIEVE 1" OF WATER PER WEEK IS AS FOLLOWS:
ZONE 1 – 15 MINUTES PER ZONE (ADJUSTED TIMING TO MINUTES)
END USER SHALL PROPERLY ADJUST RUN TIMES FOR CHANGING FIELD AND SEASONAL CONDITIONS.

5) IRRIGATION INSTALLER IS RESPONSIBLE FOR, BUT NOT LIMITED TO THE COMPLETE INSTALLATION OF THIS IRRIGATION SYSTEM. FOLLOW ALL APPLICABLE CODES AND LAWS. CONTACT A UTILITY MARKING COMPANY PRIOR TO THE COMMENCEMENT OF WORK. IRRIGATION WORK TO INCLUDE ALL TRENCHING, BACKFILL, SLEEVING, CONDUIT, WIRE, WIRE CONNECTORS, WIRING RESULTS TO THE G.C. CONTROLLER INSTALLATION, RAIN SENSOR INSTALLATION, SPRINKLERS, VALVES, PIPE & WIRE, AND RELATED ITEMS.

THE GENERAL CONTRACTOR SHALL BE RESPONSIBLE FOR THE POINT OF CONNECTION, 115 VAC POWER FOR THE CONTROLLER, SLEEVING & CONDUIT, AND RELATED ITEMS.

PROVIDE AN ALTERNATE PRICE FOR THE POWER TO THE BOOSTER PUMP IF ONE IS REQUIRED.
BOOSTER PUMP IS AN ALTERNATE UNTIL THE PRESSURE AT THE INLET TO THE BACKFLOW PREVENTER CAN BE SUPPLIED TO THE ARCHITECT FOR REVIEW.

ENCLOSURES ON CONCRETE PAD TO BE INSTALLED BY THE GENERAL CONTRACTOR. ENCLOSURES SUPPLIED BY THE IRRIGATION CONTRACTOR.

BACKFLOW TO BE PROVIDED BY THE IRRIGATION CONTRACTOR AND INSTALLED Y THE PLUMBER.

0 30 60 90

Carolyn Cooney & Associates
Landscape Architecture / Planning
13 Elm Street, Milford, MA 01757
Telephone 508 478 8426, Facsimile 508 478 8607

Site Engineering Consultants, Inc.
55 Grape Shot Road
Sharon, Massachusetts 02067
TEL: (781) 784-0326
FAX: (781) 784-0492
CONSULTING CIVIL ENGINEERS

No.	Description	Date

REVISIONS

North

Project:

CITY OF WALTHAM
GRAVERSON PLAYGROUND
16 PINE VALE ROAD
WALTHAM, MA 02451

Prepared For:

CITY OF WALTHAM
DEPARTMENT OF RECREATION
510 MOODY STREET
WALTHAM, MA 02453

TITLE:

IRRIGATION PLAN

Scale 1"=30' Date OCT 31, 2017
Drawn By DRB
Checked By CCC
Approved By CCC
Project No. 1710.00

DWG No. L.701

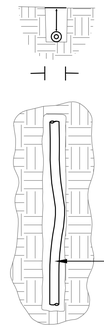

NOTE:

ALL OF THE PIPE DEPTHS ARE BASED ON THE INDIVIDUAL PIPE SIZES. REFER TO THE SPECIFICATIONS FOR THE MINIMUM DEPTH OF COVER FOR EACH SIZE OF PIPE.

SECTION

1 TRENCH DETAIL, TYP.
N.T.S.

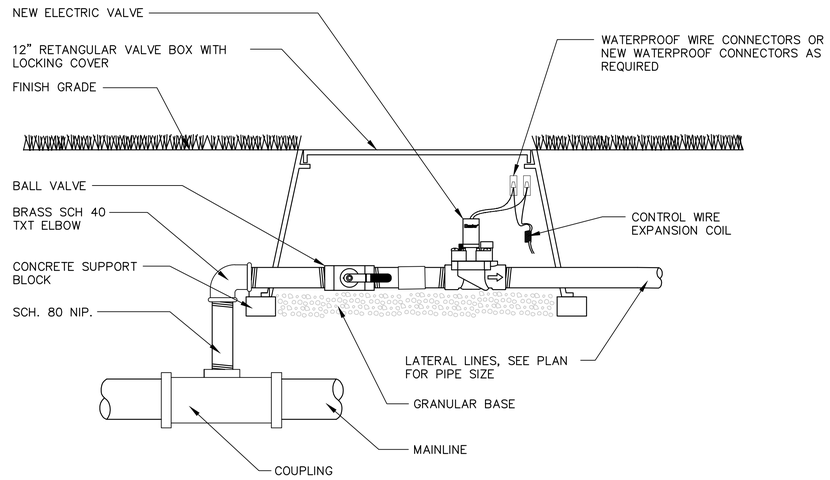

SECTION

4 AUTOMATIC CONTROL VALVE DETAIL, TYP.
N.T.S.

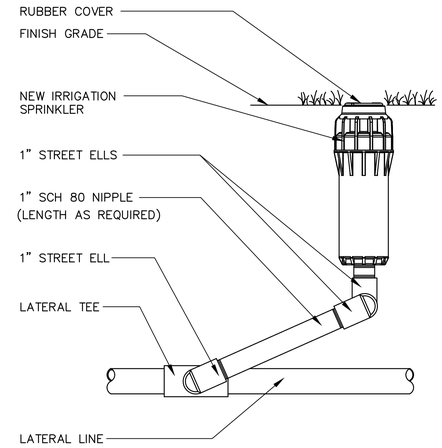

SECTION

7 GEAR DRIVEN ROTARY IRRIGATION SPRINKLER INSTALLATION DETAIL, TYP.
N.T.S.

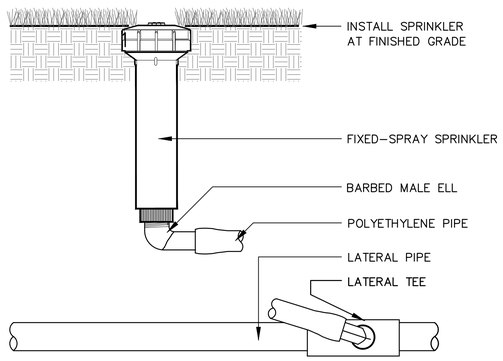

SECTION

2 SPRAY SPRINKLER DETAIL, TYP.
N.T.S.

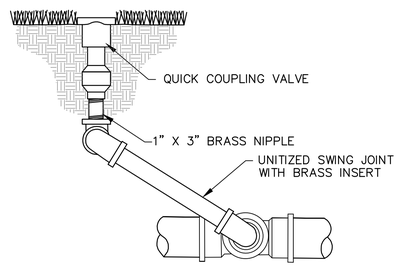

SECTION

5 QUICK COUPLING VALVE DETAIL, TYP.
N.T.S.

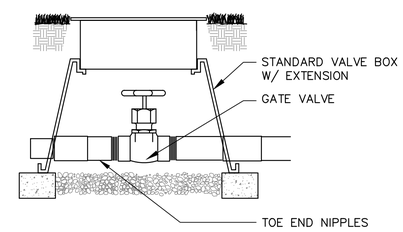

SECTION

8 SHUT OFF DETAIL, TYP.
N.T.S.

PROVIDE THRUST BLOCKS AT ALL CHANGES IN SIZE OR DIRECTION, ELBOWS, REDUCERS, PLUGS, VALVES, AND THE OPPOSITE SIDE OF TEE BRANCHES.

THE SIZES OF THE BLOCK IS DETERMINED BY THE WORKING PRESSURE, THE SIZE AND TYPE OF FITTING, AND SOIL CONDITIONS AT THE JOB SITE. TO CALCULATE THE AREA OF CONTACT WITH THE SOIL, FOLLOW THESE STEPS:

– CALCULATE THE THRUST BY SELECTING THE VALVE BY SIZE AND TYPE OF FITTING (TABLE 1), AND MULTIPLING THAT VALUE BY THE MAXIMUM WORKING PRESSURE AT THE FITTING.

– DIVIDE THE TOTAL THRUST BY BEARING CAPACITY OF THE SOIL IN EXCAVATION (TABLE 2).

– THE RESULT IS THE TOTAL AREA (IN SQUARE FEET) OF THRUST BLOCK REQUIRED TO BE IN CONTACT WITH THE UNDISTURBED SOIL OF THE TRENCH WALL.

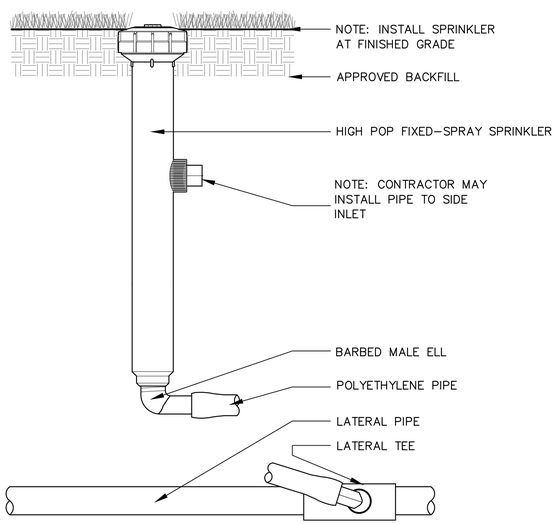

SECTION

3 12" HP SHRUB STREAM SPRAY SPRINKLER DETAIL, TYP.
N.T.S.

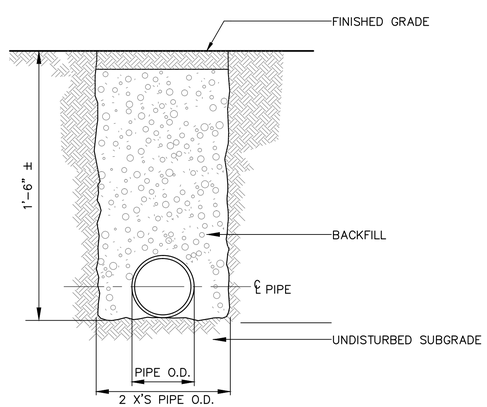

PLAN

6 PE MAINLINE TRENCH SECTION DETAIL, TYP.
N.T.S.

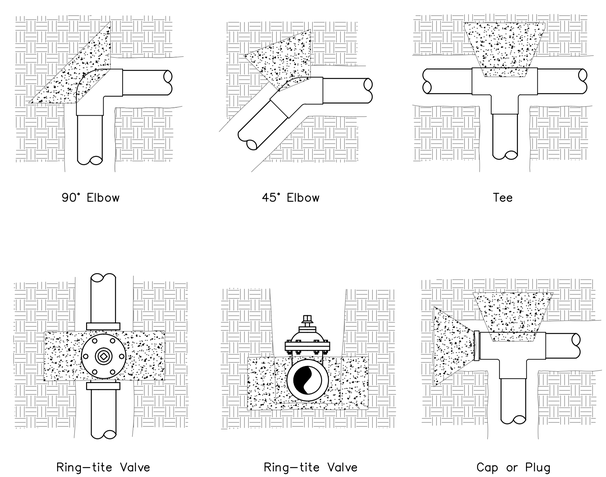

SECTION

9 THRUST BLOCKING DETAIL, TYP.
N.T.S.

Table 1
Fitting Thrust Factors

Size	Tee,Cap or Valve	90° Elbow	45° Elbow	22.5° Elbow
1 1/2	2.94	4.16	2.25	1.15
2	4.56	6.45	3.50	1.78
2 1/2	6.65	9.40	5.10	2.60
3	9.80	13.90	7.51	3.82
4	16.20	23.00	12.40	6.31
6	34.80	49.20	26.70	13.60
8	59.00	83.50	45.20	23.00
10	91.50	130.00	70.00	35.80
12	129.00	182.00	98.50	50.30

Table 2
Soil Bearing Loads

SOIL TYPE	SAFE BEARING LOAD LBS PER SQ FT
Muck, peat, etc.	0
Soft Clay	500
Medium Clay	1,000
Sand	1,000
Sand & Gravel	1,500
Compact Sand	3,000
Sand & Gravel cemented w/Clay	4,000
Hard Pan Clay	5,000
Sound Shale	10,000

Carolyn Cooney & Associates
Landscape Architecture / Planning
13 Elm Street, Milford, MA 01757
Telephone 508 478 8426, Facsimile 508 478 8607

Site Engineering Consultants, Inc.
55 Grape Shot Road
Sharon, Massachusetts 02067
TEL: (781) 784-0326
FAX: (781) 784-0492
CONSULTING CIVIL ENGINEERS

No.	Description	Date

REVISIONS

Project:

CITY OF WALTHAM
GRAVERSON PLAYGROUND
16 PINE VALE ROAD
WALTHAM, MA 02451

Prepared For:

CITY OF WALTHAM
DEPARTMENT OF RECREATION
510 MOODY STREET
WALTHAM, MA 02453

TITLE:

IRRIGATION DETAILS

Scale AS NOTED Date OCT 31, 2017
Drawn By DRB
Checked By CCC
Approved By CCC
Project No. 1710.00

DWG No. L.702

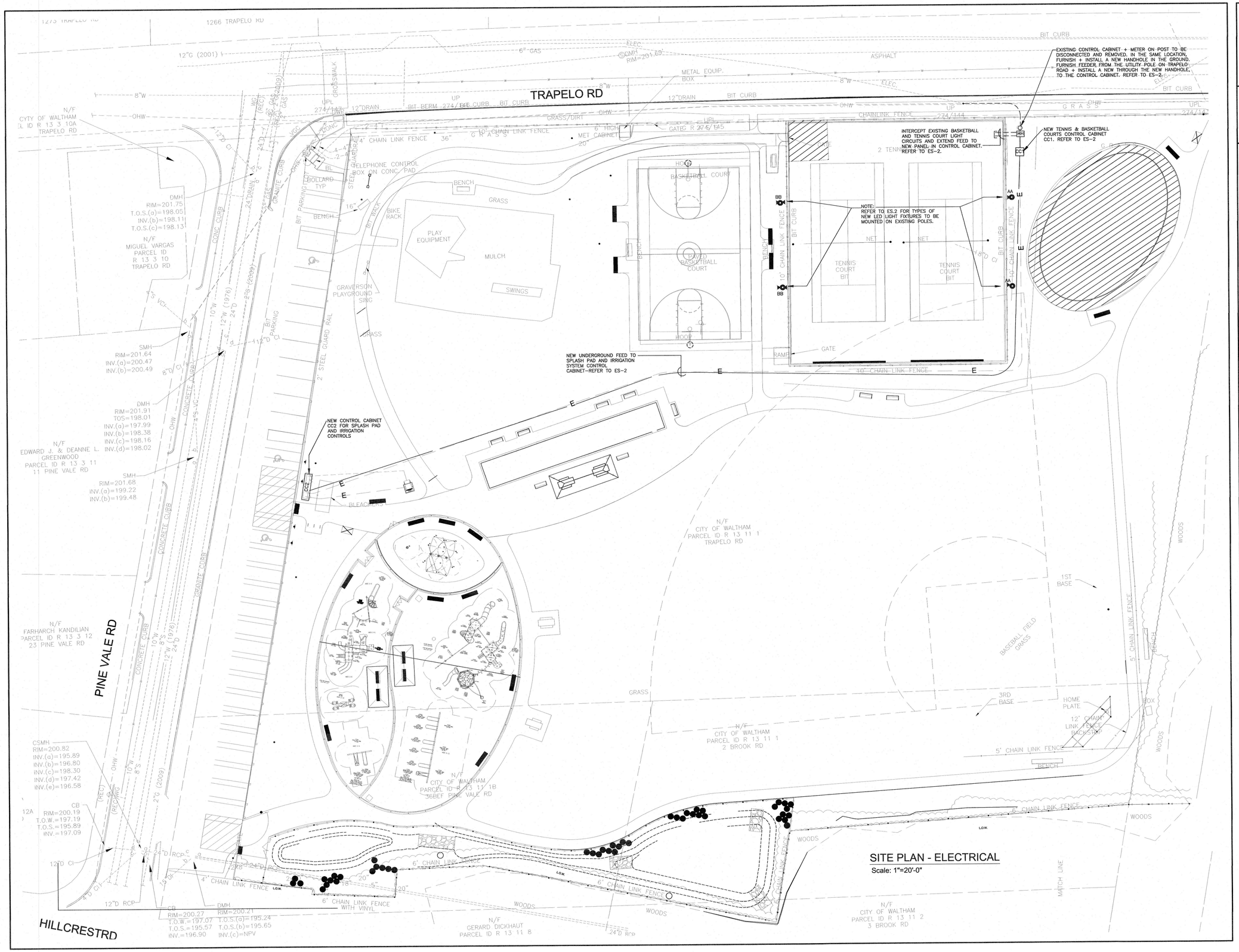

Carolyn Cooney & Associates
Landscape Architecture / Planning
13 Elm Street, Milford, MA 01757
Telephone 508 478 8426, Facsimile 508 478 8607

COMMONWEALTH OF MASSACHUSETTS
ROBERT J. FIGUERIDO
ELECTRICAL
No. 20029

SHEPHERD ENGINEERING, INC.
ELECTRICAL CONSULTANTS
1328 GRAFTON STREET
WORCESTER, MASSACHUSETTS 01604
PHONE: (508) 757-7793 • FAX: (508) 753-2309
REFERENCE NO.: 16112

No.	Description	Date

REVISIONS

North

Project:

CITY OF WALTHAM
GRAVERSON PLAYGROUND
16 PINE VALE ROAD
WALTHAM, MA 02451

Prepared For:

CITY OF WALTHAM
DEPARTMENT OF RECREATION 510
MOODY STREET
WALTHAM, MA 02453

TITLE:

SITE PLAN
ELECTRICAL

Scale	1"=20'	Date SEPT 12, 2017
Drawn By	AJV	
Checked By	MRF	
Approved By	JDS	
Project No.	1710.00	

DWG No. ES.1

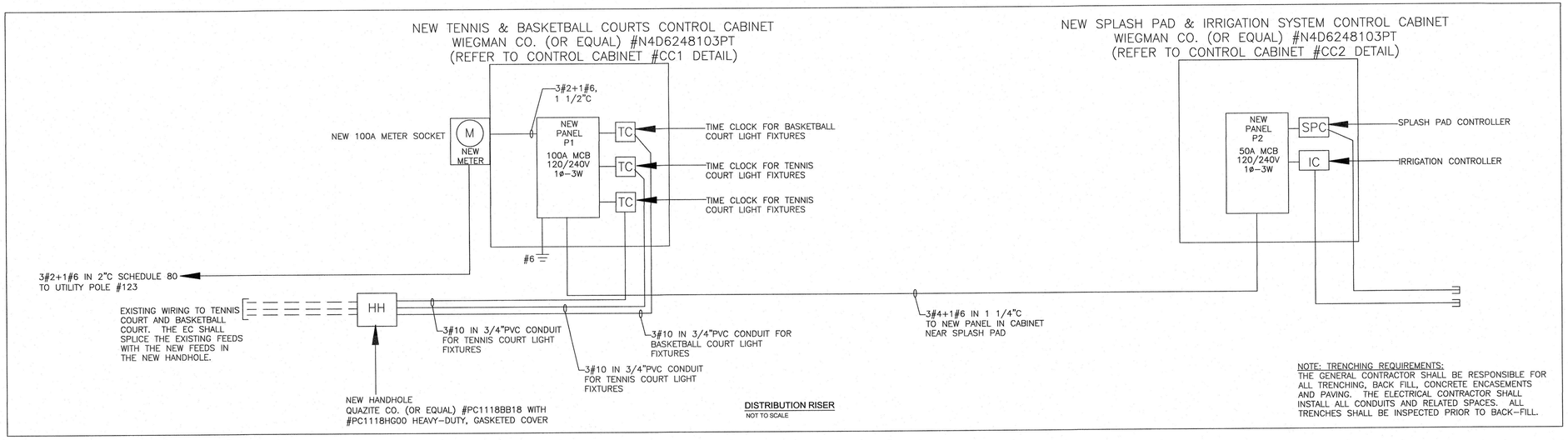

DISTRIBUTION RISER
NOT TO SCALE

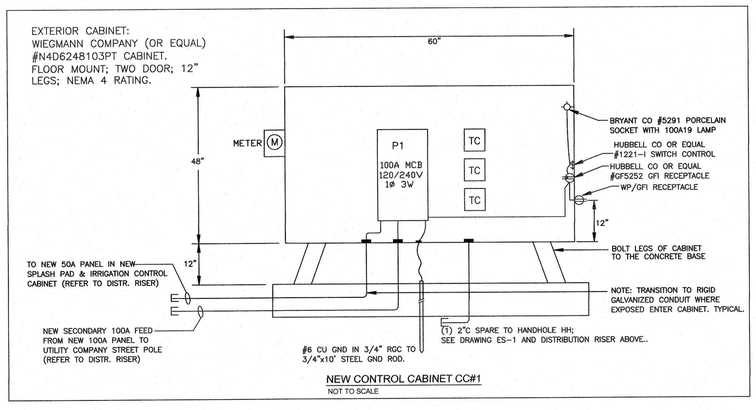

NEW CONTROL CABINET CC#1
NOT TO SCALE

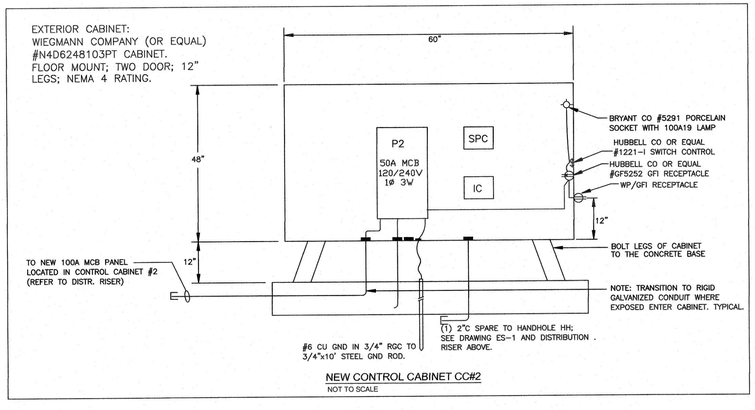

NEW CONTROL CABINET CC#2
NOT TO SCALE

PANEL: P1
MAIN: 100A MCB — TYPE: CUTLER-HAMMER CO. OR EQUAL
VOLTAGE: 120/240V PHASE: 1 WIRE: 3 — SURFACE

CIR	DESCRIPTION	TRIP	POLE	CIR	DESCRIPTION	TRIP	POLE
1	TENNIS COURT LTS.	20	1	2	BASKETBALL COURT LTS.	20	1
3	TENNIS COURT LTS.	20	1	4	CABINET LIGHTS & RECEPTACLES	20	1
5	PANEL P2	50	2	6	SPARE	20	1
7				8	SPARE	20	1
9				10			
11				12			
13				14			
15				16			
17				18			

PANEL: P2
MAIN: 50A MCB — TYPE: CUTLER-HAMMER CO. OR EQUAL
VOLTAGE: 120/240V PHASE: 1 WIRE: 3 — SURFACE

CIR	DESCRIPTION	TRIP	POLE	CIR	DESCRIPTION	TRIP	POLE
1	SPLASH PAD CONTROLLER	20	1	2	IRRIGATION CONTROLLER	20	1
3	CABINET LIGHTS & RECEPTACLES	20	1	4	SPARE	20	1
5	SPARE	20	1	6	SPARE	20	1
7	SPARE	20	1	8	SPARE	20	1
9				10			
11				12			

LIGHTING FIXTURE SCHEDULE

TYPE	MANUFACTURER	CATALOGUE #	LAMPING			MOUNTING	REMARKS
			TYPE	WATTAGE	QUANTITY		
*AA	MUSCO	TLC-LED-400	LED		2	POLE-MT'D	NEW LED 2-HEADED FLOOD LIGHT
*BB	MUSCO	TLC-LED-400	LED		3	POLE-MT'D	NEW LED 4-HEADED FLOOD LIGHT

*AA- LIGHT FIXTURES TO MOUNT ON (2) LIGHT-TRUNNION MOUNT. SUPPLIED BY MUSCO
*BB- LIGHT FIXTURES TO MOUNT ON (2) LIGHT-TRUNNION MOUNT. SUPPLIED BY MUSCO
(1) FIXTURE TO LIGHT BASKETBALL COURT AND (2) TO LIGHT TENNIS COURTS
NOTE: DRIVERS TO MOUNT TO POLE 10' ABOVE GRADE

Carolyn Cooney & Associates
Landscape Architecture / Planning
13 Elm Street, Milford, MA 01757
Telephone 508 478 8426, Facsimile 508 478 8607

COMMONWEALTH OF MASSACHUSETTS — ROBERT J. FIGUEIREDO — ELECTRICAL — No. 29029

SHEPHERD ENGINEERING, INC.
ELECTRICAL CONSULTANTS
1300 GRAFTON STREET
WORCESTER, MASSACHUSETTS 01604
PHONE: (508) 757-7793 * FAX: (508) 753-2309
REFERENCE NO.: 16112

No.	Description	Date

REVISIONS

Project:

CITY OF WALTHAM
CRAVERSON PLAYGROUND
16 PINE VALE ROAD
WALTHAM, MA 02451

Prepared For:

CITY OF WALTHAM
DEPARTMENT OF RECREATION 510
MOODY STREET
WALTHAM, MA 02453

TITLE:

ELECTRICAL DETAILS

Scale N.T.S. Date SEPT 12, 2017
Drawn By AJV
Checked By MRF
Approved By JDS
Project No. 1710.00

DWG No. ES.2

CONSTRUCTION DETAILS
IN
WALTHAM, MA
"GRAVERSON PLAYGROUND"

SCALE: 1" = N.T.S.

DATE: SEPTEMBER 29, 2017

WILLIAMS & SPARAGES
ENGINEERS | PLANNERS | SURVEYORS
189 NORTH MAIN STREET
SUITE 101
MIDDLETON, MA 01949
PHONE: (978) 539-8088
FAX: (978) 539-8200
WWW.WSENGINEERS.COM

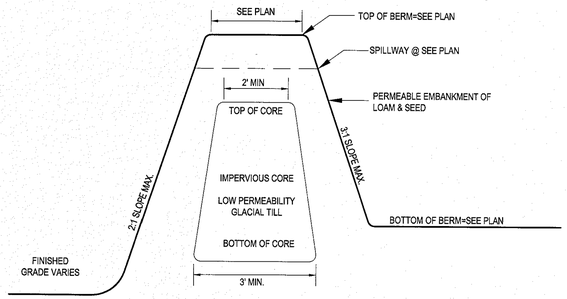

BIO RETENTION AREAS
EARTH BERM CONSTRUCTION
(NOT TO SCALE)

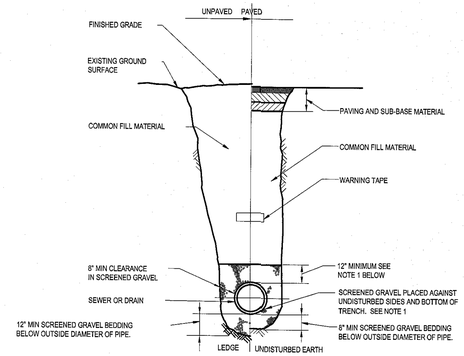

NOTES:

1. FOR PIPES OTHER THAN PVC. SELECTED COMMON FILL MAY BE USED FROM MID-DIAMETER OF PIPE TO 12" ABOVE TOP OF PIPE

TRENCH DETAIL FOR
GRAVITY PIPE
(NOT TO SCALE)

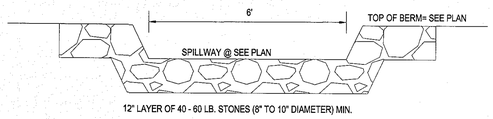

BIO RETENTION AREAS
SPILLWAY CONSTRUCTION
DETAIL
(NOT TO SCALE)

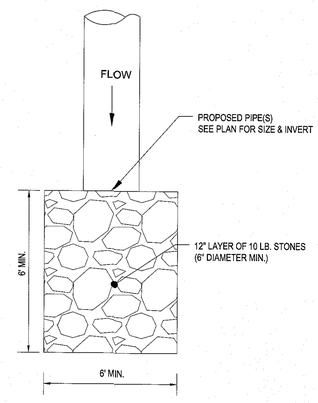

RIP RAP APRON
DETAIL
(NOT TO SCALE)

UTILITY NOTES:

1) THE UTILITIES SHOWN ON THE SITE PLANS WERE PROVIDED BY MARSHALL/GARY LLC AND ARE NOT THE RESULT OF AN INSTRUMENT SURVEY PERFORMED BY WILLIAMS & SPARAGES.

2) NO REPRESENTATION OR WARRANTEE IS MADE AS TO THE ACCURACY OF THE LOCATION OF THE SUBSURFACE UTILITIES AND SHOULD BE CONSIDERED APPROXIMATE.

3) THE CONTRACTOR SHALL BE RESPONSIBLE FOR CONTACTING DIGSAFE PRIOR TO CONSTRUCTION.

4) ALL UTILITIES SHALL BE VERIFIED IN THE FIELD BY THE CONTRACTOR PRIOR TO THE START OF CONSTRUCTION AND SHALL NOTIFY THE CITY OF WALTHAM ENGINEER IF EXISTING CONDITIONS DIFFER FROM THOSE SHOWN ON THE PLAN THAT WILL PREVENT THE PROPOSED WORK FROM BEING COMPLETED AS INTENDED.

5) SHOULD A CONFLICT ARISE AFTER THE START OF CONSTRUCTION BETWEEN AN EXISTING UTILITY AND THE PROPOSED WORK THE CONTRACTOR SHALL NOTIFY THE CITY'S REPRESENTATIVE IN WRITING.

6) WILLIAMS & SPARAGES' RESPONSIBLE CHARGE IS LIMITED TO THE PROPOSED DRAINAGE SYSTEM DESIGN ONLY.

SEAL

COMMONWEALTH OF MASSACHUSETTS
PETER M. BLAIRDELL, JR.
CIVIL
No. 41613
REGISTERED PROFESSIONAL ENGINEER
(10/26/17)

C.1